BASIC ENGINEERING CIRCUIT ANALYSIS

ELEVENTH EDITION

J. DAVID IRWIN • R. MARK NELMS

WILEY

WileyPLUS

WileyPLUS is a research-based online environment for effective teaching and learning.

WileyPLUS **builds students' confidence because it takes the guesswork out of studying by providing students with a clear roadmap:**

- **what to do**
- **how to do it**
- **if they did it right**

It offers interactive resources along with a complete digital textbook that help students learn more. With *WileyPLUS*, students take more initiative so you'll have greater impact on their achievement in the classroom and beyond.

For more information, visit www.wileyplus.com

Now available for Blackboard

WileyPLUS

ALL THE HELP, RESOURCES, AND PERSONAL SUPPORT YOU AND YOUR STUDENTS NEED!

www.wileyplus.com/resources

1st DAY OF CLASS ... AND BEYOND!

2-Minute Tutorials and all of the resources you and your students need to get started

WileyPLUS Student Partner Program

Student support from an experienced student user

Wiley Faculty Network

Collaborate with your colleagues, find a mentor, attend virtual and live events, and view resources
www.WhereFacultyConnect.com

WileyPLUS Quick Start

Pre-loaded, ready-to-use assignments and presentations created by subject matter experts

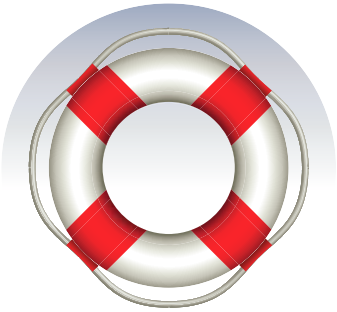

Technical Support 24/7
FAQs, online chat,
and phone support
www.wileyplus.com/support

© Courtney Keating/iStockphoto

Your *WileyPLUS* Account Manager, providing personal training and support

Basic Engineering Circuit Analysis

11e

J. David Irwin
Auburn University

R. Mark Nelms
Auburn University

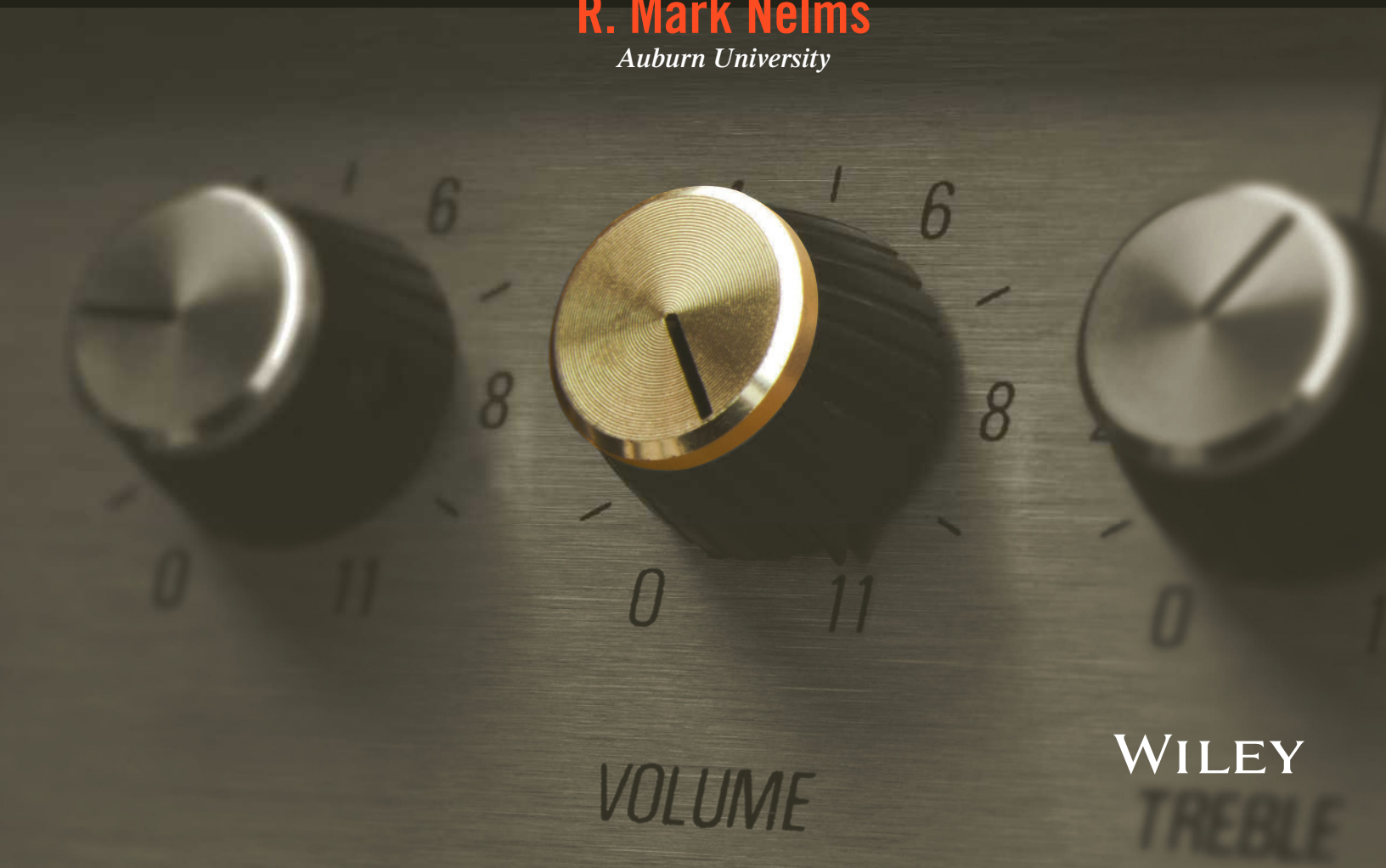

WILEY

Vice President and Executive Publisher	Don Fowley
Executive Editor	Dan Sayre
Senior Content Manager	Karoline Luciano
Production Editor	James Metzger
Executive Marketing Manager	Christopher Ruel
Design Director	Harry Nolan
Senior Designer	Maureen Eide
Cover Designer	Tom Nery
Senior Photo Editor	Lisa Gee
Editorial Assistant	Francesca Baratta
Product Designer	Jennifer Welter
Associate Editor	Wendy Ashenberg
Cover Photo	© GrahamMoore999/iStockphoto
Chapter Opener Image	© liangpv/Digital Vision Vectors/Getty Images

This book was set in 10/12 Times LT Std by MPS Limited and printed and bound by Courier-Kendallville. The cover was printed by Courier-Kendallville.

Copyright © 2015, 2011, 2008, 2005
John Wiley & Sons, Inc. All rights reserved. No part of this publication may be reproduced, stored in a retrieval system or transmitted in any form or by any means, electronic, mechanical, photocopying, recording, scanning or otherwise, except as permitted under Sections 107 or 108 of the 1976 United States Copyright Act, without either the prior written permission of the Publisher, or authorization through payment of the appropriate per-copy fee to the Copyright Clearance Center, Inc. 222 Rosewood Drive, Danvers, MA 01923, website www.copyright.com. Requests to the Publisher for permission should be addressed to the Permissions Department, John Wiley & Sons, Inc., 111 River Street, Hoboken, NJ 07030-5774, (201)748-6011, fax (201)748-6008, website http://www.wiley.com/go/permissions.

Multisim is a trademark of National Instruments. Neither Wiley, nor any software programs or other goods or services offered by Wiley, are affiliated with, endorsed by, or sponsored by National Instruments.

PSpice is a registered trademark of Cadence Design Systems, Inc. in the United States and/or other jurisdictions.

MATLAB is a registered trademark of The MathWorks, Inc.

Founded in 1807, John Wiley & Sons, Inc. has been a valued source of knowledge and understanding for more than 200 years, helping people around the world meet their needs and fulfill their aspirations. Our company is built on a foundation of principles that include responsibility to the communities we serve and where we live and work. In 2008, we launched a Corporate Citizenship Initiative, a global effort to address the environmental, social, economic, and ethical challenges we face in our business. Among the issues we are addressing are carbon impact, paper specifications and procurement, ethical conduct within our business and among our vendors, and community and charitable support. For more information, please visit our website: www.wiley.com/go/citizenship.

Evaluation copies are provided to qualified academics and professionals for review purposes only, for use in their courses during the next academic year. These copies are licensed and may not be sold or transferred to a third party. Upon completion of the review period, please return the evaluation copy to Wiley. Return instructions and a free of charge return shipping label are available at www.wiley.com/go/returnlabel. Outside of the United States, please contact your local representative.

ISBN-13 978-1-118-53929-3
BRV ISBN-13: 978-1-118-99266-1

Library of Congress Cataloging-in-Publication Data
Irwin, J. David, 1939-
Basic engineering circuit analysis/J. David Irwin, R. Mark Nelms.—11th edition.
1 online resource.
Includes bibliographical references and index.
Description based on print version record and CIP data provided by publisher; resource not viewed.
ISBN 978-1-118-95598-7 (pdf)—ISBN 978-1-118-53929-3 (cloth : alk. paper) 1. Electric circuit analysis—Textbooks. 2. Electronics—Textbooks. I. Nelms, R. M. II. Title.
TK454
621.3815—dc23

2014046173

Printed in the United States of America

10 9 8 7 6 5 4 3 2 1

To my loving family:

Edie
Geri, Bruno, Andrew, and Ryan
John, Julie, John David, and Abi
Laura

To my parents:

Robert and Elizabeth Nelms

BRIEF CONTENTS

Chapter 1 Basic Concepts 1

Chapter 2 Resistive Circuits 24

Chapter 3 Nodal and Loop Analysis Techniques 89

Chapter 4 Operational Amplifiers 147

Chapter 5 Additional Analysis Techniques 171

Chapter 6 Capacitance and Inductance 219

Chapter 7 First- and Second-Order Transient Circuits 252

Chapter 8 AC Steady-State Analysis 305

Chapter 9 Steady-State Power Analysis 362

Chapter 10 Magnetically Coupled Networks 411

Chapter 11 Polyphase Circuits 450

Chapter 12 Variable-Frequency Network Performance 482

Chapter 13 The Laplace Transform 543

Chapter 14 Application of the Laplace Transform to Circuit Analysis 569

Chapter 15 Fourier Analysis Techniques 617

Appendix Complex Numbers 659

CONTENTS

Preface ix

Chapter one
Basic Concepts 1

1.1 System of Units 2
1.2 Basic Quantities 2
1.3 Circuit Elements 8
Summary 17
Problems 18

Chapter two
Resistive Circuits 24

2.1 Ohm's Law 25
2.2 Kirchhoff's Laws 30
2.3 Single-Loop Circuits 38
2.4 Single-Node-Pair Circuits 45
2.5 Series and Parallel Resistor Combinations 50
2.6 Wye $\rightleftharpoons$ Delta Transformations 59
2.7 Circuits with Dependent Sources 63
Summary 68
Problems 69

Chapter three
Nodal and Loop Analysis Techniques 89

3.1 Nodal Analysis 90
3.2 Loop Analysis 111
Summary 128
Problems 129

Chapter four
Operational Amplifiers 147

4.1 Introduction 148
4.2 Op-Amp Models 148
4.3 Fundamental Op-Amp Circuits 154
Summary 163
Problems 163

Chapter five
Additional Analysis Techniques 171

5.1 Introduction 172
5.2 Superposition 174
5.3 Thévenin's and Norton's Theorems 179
5.4 Maximum Power Transfer 197
Summary 202
Problems 202

Chapter six
Capacitance and Inductance 219

6.1 Capacitors 220
6.2 Inductors 227
6.3 Capacitor and Inductor Combinations 236
Summary 241
Problems 241

Chapter seven
First- and Second-Order Transient Circuits 252

7.1 Introduction 253
7.2 First-Order Circuits 254
7.3 Second-Order Circuits 275
Summary 289
Problems 289

Chapter eight
AC Steady-State Analysis 305

8.1 Sinusoids 306
8.2 Sinusoidal and Complex Forcing Functions 309
8.3 Phasors 312
8.4 Phasor Relationships for Circuit Elements 314
8.5 Impedance and Admittance 318
8.6 Phasor Diagrams 325
8.7 Basic Analysis Using Kirchhoff's Laws 328
8.8 Analysis Techniques 331
Summary 344
Problems 344

Chapter nine
Steady-State Power Analysis 362

9.1 Instantaneous Power 363
9.2 Average Power 364
9.3 Maximum Average Power Transfer 369
9.4 Effective or rms Values 374
9.5 The Power Factor 377
9.6 Complex Power 379

9.7 Power Factor Correction 384
9.8 Single-Phase Three-Wire Circuits 388
9.9 Safety Considerations 391
Summary 399
Problems 399

Chapter ten
Magnetically Coupled Networks 411

10.1 Mutual Inductance 412
10.2 Energy Analysis 423
10.3 The Ideal Transformer 426
10.4 Safety Considerations 436
Summary 437
Problems 438

Chapter eleven
Polyphase Circuits 450

11.1 Three-Phase Circuits 451
11.2 Three-Phase Connections 456
11.3 Source/Load Connections 457
11.4 Power Relationships 466
11.5 Power Factor Correction 471
Summary 475
Problems 475

Chapter twelve
Variable-Frequency Network Performance 482

12.1 Variable Frequency-Response Analysis 483
12.2 Sinusoidal Frequency Analysis 491
12.3 Resonant Circuits 500
12.4 Scaling 521
12.5 Filter Networks 523
Summary 534
Problems 535

Chapter thirteen
The Laplace Transform 543

13.1 Definition 544
13.2 Two Important Singularity Functions 544
13.3 Transform Pairs 547
13.4 Properties of the Transform 549
13.5 Performing the Inverse Transform 551
13.6 Convolution Integral 557
13.7 Initial-Value and Final-Value Theorems 560
13.8 Solving Differential Equations with Laplace Transforms 562
Summary 564
Problems 564

Chapter fourteen
Application of the Laplace Transform to Circuit Analysis 569

14.1 Laplace Circuit Solutions 570
14.2 Circuit Element Models 571
14.3 Analysis Techniques 573
14.4 Transfer Function 586
14.5 Steady-State Response 603
Summary 606
Problems 606

Chapter fifteen
Fourier Analysis Techniques 617

15.1 Fourier Series 618
15.2 Fourier Transform 641
Summary 651
Problems 651

Appendix
Complex Numbers 659

Index 666

PREFACE

To the Student

Circuit analysis is not only fundamental to the entire breadth of electrical and computer engineering—the concepts studied here extend far beyond those boundaries. For this reason, it remains the starting point for many future engineers who wish to work in this field. The text and all the supplementary materials associated with it will aid you in reaching this goal. We strongly recommend while you are here to read the Preface closely and view all the resources available to you as a learner. One last piece of advice: Learning to analyze electric circuits is like learning to play a musical instrument. Most people take music lessons as a starting point. Then, they become proficient through practice, practice, and more practice. Lessons on circuit analysis are provided by your instructor and this textbook. Proficiency in circuit analysis can only be obtained through practice. Take advantage of the many opportunities throughout this textbook to practice, practice, and practice. In the end, you'll be thankful you did.

To the Instructor

The Eleventh Edition has been prepared based on a careful examination of feedback received from instructors and students. The revisions and changes made should appeal to a wide variety of instructors. We are aware of significant changes taking place in the way this material is being taught and learned. Consequently, the authors and the publisher have created a formidable array of traditional and nontraditional learning resources to meet the needs of students and teachers of modern circuit analysis.

By design, the book contains an enormous number of end-of-chapter problems that provide significant advantages for the instructor. As a time-saving measure, the instructor can use this bank of problems to select both homework problems and exam questions, term after term, without repetition. Dedicated students will find this problem set, typically graduated in difficulty, an excellent resource for testing their understanding on a range of problems.

Flipping the classroom has risen recently as an alternative mode of instruction, which attempts to help the student grasp the material quicker. Studies to date have shown that this mode also tends to minimize instructor office time. This book, with its combination of Learning Assessments, problem-solving videos, and WileyPLUS software, is an ideal vehicle for teaching in this format. These resources provide the instructor with the tools necessary to modify the format of the presentation in the hope of enhancing the student's rapid understanding of the material.

Engineering educators have long recognized that coupling traditional lecture courses with laboratory experiences enhances student interest and learning. The trend in hands-on learning has been spurred by the development of inexpensive USB-powered instruments and inexpensive portable laboratory kits that allow the student to explore electrical theory in environments that vary from a traditional laboratory classroom to an environment where the experiments can be performed anywhere at any time. Research has shown that students gain a deeper understanding of abstract theoretical concepts when the concepts are applied in practical circuits. The response of students, both male and female, to hands-on learning with such kits has been overwhelmingly positive. New to this edition, a list of such experiments is provided at the beginning of each chapter. The experiments, which demonstrate some of the concepts introduced in the chapters, can be conducted under the guidance of an instructor or independently.

In accordance with the earlier editions, the book contains a plethora of examples that are designed to help the student grasp the salient features of the material quickly. A number of new examples have been introduced, and MATLAB® has been employed, where appropriate, to provide a quick and easy software solution as a means of comparison, as well as to check on other solution techniques.

Highlights of the Eleventh Edition

- A four-color design is employed to enhance and clarify both text and illustrations. This sharply improves the pedagogical presentation, particularly with complex illustrations. For example, see Figure 2.5 on page 30.
- End-of-chapter homework problems have been substantially revised and augmented. There are now approximately 1,400 problems in the Eleventh Edition, of which over 400 are new! Multiple-choice Fundamentals of Engineering (FE) Exam problems also appear at the end of each chapter.
- Problem-solving videos (PSVs) have been created, showing students step by step how to solve all Learning Assessment problems within each chapter. This is a special feature that should significantly enhance the learning experience for each subsection in a chapter.
- In order to provide maximum flexibility, online supplements contain solutions to examples in the book using MATLAB, PSpice®, or MultiSim®. The worked examples can be supplied to students as digital files, or one or more of them can be incorporated into custom print editions of the text, depending on the instructor's preference.
- Problem-Solving Strategies have been retained in the Eleventh Edition. They are utilized as a guide for the solutions contained in the PSVs.
- The WileyPLUS resources have been greatly updated and expanded, with additional algorithmic problems, PSVs, and much more. Reading Quiz questions give instructors the opportunity to track student reading and measure their comprehension. Math Skills Assessments provide faculty with tools to assess students' mastery of essential mathematical concepts. Not only can faculty measure their students' math comprehension at the beginning of the term, they also now have resources to which they can direct students to reinforce areas where they need to upgrade their skills.
- Experiments are paired with each chapter so that students can see in action the concepts discussed in the chapter through the use of both predefined physical circuits and independent design projects.

Organization

This text is suitable for a one-semester, a two-semester, or a three-quarter course sequence. The first seven chapters are concerned with the analysis of dc circuits. An introduction to operational amplifiers is presented in Chapter 4. This chapter may be omitted without any loss of continuity. Chapters 8 to 12 are focused on the analysis of ac circuits, beginning with the analysis of single-frequency circuits (single-phase and three-phase) and ending with variable-frequency circuit operation. Calculation of power in single-phase and three-phase ac circuits is also presented. The important topics of the Laplace transform and Fourier transform are covered in Chapters 13 to 15.

The organization of the text provides instructors maximum flexibility in designing their courses. One instructor may choose to cover the first seven chapters in a single semester, while another may omit Chapter 4 and cover Chapters 1 to 3 and 5 to 8. Other instructors have chosen to cover Chapters 1 to 3, 5 to 6, and section 7.1, and then cover Chapters 8 and 9. The remaining chapters can be covered in a second semester course.

Text Pedagogy

The pedagogy of this text is rich and varied. It includes print and media, and much thought has been put into integrating its use. To gain the most from this pedagogy, please review the following elements commonly available in most chapters of this book.

Learning Objectives are provided at the outset of each chapter. This tabular list tells the reader what is important and what will be gained from studying the material in the chapter.

Experiments that reinforce the learning objectives are listed with brief descriptions of what the student will gain by performing each experiment. Most experiments also involve simulating the circuit with computer software to verify/predict correct operation.

Examples are the mainstay of any circuit analysis text, and numerous examples have always been a trademark of this textbook. These examples provide a more graduated level of presentation with simple, medium, and challenging examples.

Hints can often be found in the page margins. They facilitate understanding and serve as reminders of key issues. See, for example, page 9.

Learning Assessments are a critical learning tool in this text. These exercises test the cumulative concepts to that point in a given section or sections. Not only is the answer provided, but a problem-solving video accompanies each of these exercises, demonstrating the solution in step-by-step detail. The student who masters these is ready to move forward. See, for example, page 11.

Problem-Solving Strategies are step-by-step problem-solving techniques that many students find particularly useful. They answer the frequently asked question, "Where do I begin?" Nearly every chapter has one or more of these strategies, which are a kind of summation on problem solving for concepts presented. See, for example, page 44.

Problems have been greatly revised for the Eleventh Edition. This edition has over 400 new problems of varying depth and level. Any instructor will find numerous problems appropriate for any level class. There are approximately 1,400 problems in the Eleventh Edition! Included with the problems are **FE Exam Problems** for each chapter. If you plan on taking the FE Exam, these problems closely match problems you will typically find on the FE Exam.

Circuit Simulation and Analysis Software represents a fundamental part of engineering circuit design today. Software such as **PSpice**, **MultiSim**, and **MATLAB** allow engineers to design and simulate circuits quickly and efficiently. As an enhancement with enormous flexibility, all three of these software packages can be employed in the Eleventh Edition. In each case, online supplements are available that contain the solutions to numerous examples in each of these software programs. Instructors can opt to make this material available online or as part of a customized print edition, making this software an integral and effective part of the presentation of course material.

The rich collection of material that is provided for this edition offers a distinctive and helpful way for exploring the book's examples and exercises from a variety of simulation techniques.

WileyPLUS is an innovative, research-based, online environment for effective teaching and learning.

WileyPLUS

WHAT DO STUDENTS RECEIVE WITH WILEYPLUS? *A Research-Based Design*: WileyPLUS provides an online environment that integrates relevant resources, including the entire digital textbook, in an easy-to-navigate framework that helps students study more effectively.

- WileyPLUS adds structure by organizing textbook content into smaller, more manageable "chunks."
- Related media, examples, and sample practice items reinforce the learning objectives.
- Innovative features such as calendars, visual progress tracking, and self-evaluation tools improve time management and strengthen areas of weakness.

One-on-One Engagement: With WileyPLUS, students receive 24/7 access to resources that promote positive learning outcomes. Students engage with related examples (in various media) and sample practice items, including:

- FE Exam Questions
- Reading Quiz Questions

- Circuit Solutions
- Learning Assessments
- Math Skills Assessments

Measurable Outcomes: Throughout each study session, students can assess their progress and gain immediate feedback. WileyPLUS provides precise reporting of strengths and weaknesses, as well as individualized quizzes, so that students are confident that they are spending their time on the right things. With WileyPLUS, students always know the exact outcome of their efforts.

WHAT DO INSTRUCTORS RECEIVE WITH WILEYPLUS? WileyPLUS provides reliable, customizable resources that reinforce course goals inside and outside of the classroom, as well as visibility into individual student progress. Precreated materials and activities help instructors optimize their time.

Customizable Course Plan: WileyPLUS comes with a precreated course plan designed by a subject matter expert uniquely for this course. Simple drag-and-drop tools make it easy to assign the course plan as-is or modify it to reflect your course syllabus.

Precreated Activity Types include:

- Questions
- Readings and Resources
- Presentation
- Print Tests
- Concept Mastery

Course Materials and Assessment Content:

- Lecture Notes
- PowerPoint Slides
- Image Gallery
- Instructor's Manual
- Gradable Reading Assignment Questions (embedded with online text)
- Question Assignments: All end-of-chapter problems are coded algorithmically with hints, links to text, whiteboard/show work feature, and instructor-controlled problem-solving help.

Gradebook: WileyPLUS provides instant access to reports on trends in class performance, student use of course materials, and progress toward learning objectives, helping inform decisions and drive classroom discussions.

Learn more about WileyPLUS at www.wileyplus.com.

Powered by proven technology and built on a foundation of cognitive research, WileyPLUS has enriched the education of millions of students in more than 20 countries.

Supplements

The supplements list is extensive and provides instructors and students with a wealth of traditional and modern resources to match different learning needs.

Problem-Solving Videos are offered again in the Eleventh Edition in an iPod-compatible format. The videos provide step-by-step solutions to Learning Assessments. Videos for Learning Assessments will follow directly after a chapter feature called *Problem-Solving Strategy*. Students who have used these videos with past editions have found them to be very helpful.

The **Solutions Manual** for the Eleventh Edition has been completely redone, checked, and double-checked for accuracy. Although it is hand-written to avoid typesetting errors, it is the most

accurate solutions manual ever created for this textbook. Qualified instructors who adopt the text for classroom use can download it off Wiley's Instructor Companion Site.

PowerPoint Lecture Slides are an especially valuable supplementary aid for some instructors. While most publishers make only figures available, these slides are true lecture tools that summarize the key learning points for each chapter and are easily editable in PowerPoint. The slides are available for download from Wiley's Instructor Companion Site for qualified adopters.

Lab-in-a-Box: Introductory Experiments in Electric Circuits is a collection of laboratory experiments made available within WileyPLUS or as a companion publication. The experiments have been designed for a range of instructional settings, from traditional laboratory classes through at-home experimentation. This allows the instructor to choose the instructional environment for the experiments. Videos to support students as they perform the experiments are also available in WileyPLUS.

Acknowledgments

Over the more than three decades that this text has been in existence, we estimate that more than one thousand instructors have used our book in teaching circuit analysis to hundreds of thousands of students. As authors, there is no greater reward than having your work used by so many. We are grateful for the confidence shown in our text and for the numerous evaluations and suggestions from professors and their students over the years. This feedback has helped us continuously improve the presentation. For this Eleventh Edition, we especially thank Brandon Eidson and Elizabeth Devore with Auburn University for their assistance with the solutions manual.

We were fortunate to have an outstanding group of faculty who has participated in reviews, surveys, and focus groups for this edition:

Jorge Aravena, Louisiana State University
Cindy Barnicki, Milwaukee School of Engineering
Kurt Becker, Utah State University
Yugal Behl, CNM Community College
Christopher Bise, West Virginia University
April Bryan, Rose-Hulman
James Conrad, University of North Carolina–Charlotte
Roy Craig, University of Texas–Austin
Janak Dave, University of Cincinnati
Richard DuBroff, Missouri University of Science & Technology
Kim Fitzgerald, University of Illinois–Chicago
Manfred Hampe, TU Darmstadt
Melinda Holtzman, Portland State University
Bill Hornfeck, Lafayette College
Paul King, Vanderbilt University
Steve Krause, Arizona State University
Gordon Lee, San Diego State University
Janice Margle, Penn State University–Abington
Maditumi Mitra, University of Maryland
Abhijit Nagchaudhuri, University of Maryland–Eastern Shore
Bahram Nassersharif, University of Rhode Island
Tokunbo Ogunfunmi, Santa Clara University
Michael Polis, Oakland University
Kanti Prasad, University of Massachusetts–Lowell
Robert Steker, WCTC
Yu Sun, University of Toronto
Nina Telang, University of Texas–Austin
Natalie VanTyne, Colorado School of Mines
Lale Yurttas, Texas A&M University
Tim Zeigler, Southern Polytechnic State University

The preparation of this book and the materials that support it have been handled with both enthusiasm and great care. The combined wisdom and leadership of our colleagues at Wiley has resulted in a tremendous team effort that has addressed every aspect of the presentation. This team included the following individuals:

VP and Executive Publisher, Don Fowley
Executive Editor, Dan Sayre
Product Designer, Jennifer Welter
Executive Marketing Manager, Christopher Ruel
Production Editor, James Metzger
Senior Designer, Maureen Eide
Senior Content Manager, Karoline Luciano
Senior Photo Editor, Lisa Gee
Associate Editor, Wendy Ashenberg
Editorial Assistant, Francesca Baratta

Each member of this team played a vital role in preparing the package that is the Eleventh Edition of *Basic Engineering Circuit Analysis*. We are most appreciative of their many contributions.

As in the past, we are most pleased to acknowledge the support that has been provided by numerous individuals to earlier editions of this book. Our Auburn colleagues who have helped are:

Thomas A. Baginski
Travis Blalock
Henry Cobb
Elizabeth Devore
Bill Dillard
Zhi Ding
Kevin Driscoll
Brandon Eidson
E. R. Graf
L. L. Grigsby
Charles A. Gross
Stephen Haddock
David C. Hill
M. A. Honnell
R. C. Jaeger
Keith Jones
Betty Kelley
Ray Kirby
Matthew Langford
Aleck Leedy
George Lindsey
Jo Ann Loden
James L. Lowry
David Mack
Paulo R. Marino
M. S. Morse
Sung-Won Park
John Parr
Monty Rickles
C. L. Rogers
Tom Shumpert
Les Simonton
James Trivltayakhum
Susan Williamson
Jacinda Woodward

Many of our friends throughout the United States, some of whom are now retired, have also made numerous suggestions for improving the book:

David Anderson, University of Iowa
Jorge Aravena, Louisiana State University
Les Axelrod, Illinois Institute of Technology
Richard Baker, UCLA
Charles F. Bunting, Oklahoma State University
John Choma, University of Southern California
David Conner, University of Alabama at Birmingham
James L. Dodd, Mississippi State University
Kevin Donahue, University of Kentucky
John Durkin, University of Akron
Prasad Enjeti, Texas A&M University
Earl D. Eyman, University of Iowa
Arvin Grabel, Northeastern University
Paul Gray, University of Wisconsin–Platteville
Ashok Goel, Michigan Technological University

Walter Green, University of Tennessee
Paul Greiling, UCLA
Mohammad Habli, University of New Orleans
John Hadjilogiou, Florida Institute of Technology
Yasser Hegazy, University of Waterloo
Keith Holbert, Arizona State University
Aileen Honka, The MOSIS Service–USC Information Sciences Institute
Marty Kaliski, Cal Poly, San Luis Obispo
Ralph Kinney, Louisiana State University
Muhammad A. Khaliq, Minnesota State University
Robert Krueger, University of Wisconsin
K. S. P. Kumar, University of Minnesota
Jung Young Lee, UC Berkeley (student)
Aleck Leedy, Murray State University
Hongbin Li, Stevens Institute of Technology
James Luster, Snow College
Erik Luther, National Instruments
Ian McCausland, University of Toronto
Arthur C. Moeller, Marquette University
Darryl Morrell, Arizona State University
M. Paul Murray, Mississippi State University
Burks Oakley II, University of Illinois at Champaign–Urbana
John O'Malley, University of Florida
Arnost Neugroschel, University of Florida
William R. Parkhurst, Wichita State University
Peyton Peebles, University of Florida
Jian Peng, Southeast Missouri State University
Clifford Pollock, Cornell University
George Prans, Manhattan College
Mark Rabalais, Louisiana State University
Tom Robbins, National Instruments
Armando Rodriguez, Arizona State University
James Rowland, University of Kansas
Robert N. Sackett, Normandale Community College
Richard Sanford, Clarkson University
Peddapullaiah Sannuti, Rutgers University
Ronald Schulz, Cleveland State University
M. E. Shafeei, Penn State University at Harrisburg
Martha Sloan, Michigan Technological University
Scott F. Smith, Boise State University
Karen M. St. Germaine, University of Nebraska
Janusz Strazyk, Ohio University
Gene Stuffle, Idaho State University
Thomas M. Sullivan, Carnegie Mellon University
Saad Tabet, Florida State University
Val Tareski, North Dakota State University
Thomas Thomas, University of South Alabama
Leonard J. Tung, Florida A&M University/Florida State University
Marian Tzolov, Lock Haven University
Darrell Vines, Texas Tech University
Carl Wells, Washington State University
Seth Wolpert, University of Maine

Finally, Dave Irwin wishes to express his deep appreciation to his wife, Edie, who has been most supportive of our efforts in this book. Mark Nelms would like to thank his parents, Robert and Elizabeth, for their support and encouragement.

J. David Irwin and R. Mark Nelms

ChapterOne

THE LEARNING GOALS FOR THIS CHAPTER ARE THAT STUDENTS SHOULD BE ABLE TO:

- Use appropriate SI units and standard prefixes when calculating voltages, currents, resistances, and powers.
- Explain the relationships between basic electrical quantities: voltage, current, and power.
- Use the appropriate symbols for independent and dependent voltage and current sources.
- Calculate the value of the dependent sources when analyzing a circuit that contain independent and dependent sources.
- Calculate the power absorbed by a circuit element using the passive sign convention.

BASIC CONCEPTS

EXPERIMENTS THAT HELP STUDENTS DEVELOP AN UNDERSTANDING OF BASIC ELECTRIC CIRCUIT CONCEPTS ARE:

- Breadboard Basics: Learn the operation of a digital multimeter while mapping the connections on a breadboard via resistance measurements.
- Resistance Tolerances: Measure the resistance of real resistors and apply statistical analysis to the experimental values to explain nominal resistance and tolerance.
- Voltage Polarity and Direction of Current: Discover how dc currents and voltages are measured using a digital multimeter so that the resulting power calculated follows the passive sign convention.

1.1 System of Units

The system of units we employ is the international system of units, the Système International des Unités, which is normally referred to as the SI standard system. This system, which is composed of the basic units meter (m), kilogram (kg), second (s), ampere (A), kelvin (K), and candela (cd), is defined in all modern physics texts and therefore will not be defined here. However, we will discuss the units in some detail as we encounter them in our subsequent analyses.

The standard prefixes that are employed in SI are shown in **Fig. 1.1**. Note the decimal relationship between these prefixes. These standard prefixes are employed throughout our study of electric circuits.

Circuit technology has changed drastically over the years. For example, in the early 1960s the space on a circuit board occupied by the base of a single vacuum tube was about the size of a quarter (25-cent coin). Today that same space could be occupied by an Intel Pentium integrated circuit chip containing 50 million transistors. These chips are the engine for a host of electronic equipment.

Figure 1.1
Standard SI prefixes.

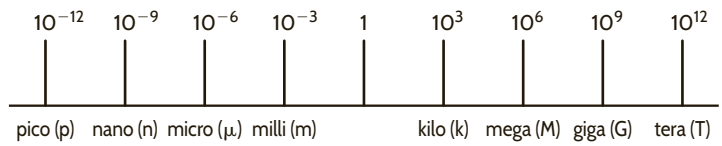

1.2 Basic Quantities

Before we begin our analysis of electric circuits, we must define terms that we will employ. However, in this chapter and throughout the book, our definitions and explanations will be as simple as possible to foster an understanding of the use of the material. No attempt will be made to give complete definitions of many of the quantities because such definitions are not only unnecessary at this level but are often confusing. Although most of us have an intuitive concept of what is meant by a circuit, we will simply refer to an *electric circuit* as an interconnection of electrical components, each of which we will describe with a mathematical model.

The most elementary quantity in an analysis of electric circuits is the electric *charge*. Our interest in electric charge is centered around its motion, since charge in motion results in an energy transfer. Of particular interest to us are those situations in which the motion is confined to a definite closed path.

An electric circuit is essentially a pipeline that facilitates the transfer of charge from one point to another. The time rate of change of charge constitutes an electric *current*. Mathematically, the relationship is expressed as

$$i(t) = \frac{dq(t)}{dt} \qquad \text{or} \qquad q(t) = \int_{-\infty}^{t} i(x)\,dx \tag{1.1}$$

where i and q represent current and charge, respectively (lowercase letters represent time dependency, and capital letters are reserved for constant quantities). The basic unit of current is the ampere (A), and 1 ampere is 1 coulomb per second.

Although we know that current flow in metallic conductors results from electron motion, the conventional current flow, which is universally adopted, represents the movement of positive charges. It is important that the reader think of current flow as the movement of positive charge regardless of the physical phenomena that take place. The symbolism that will be used to represent current flow is shown in **Fig. 1.2**. $I_1 = 2$ A in **Fig. 1.2a** indicates that at any point in the wire shown, 2 C of charge pass from left to right each second. $I_2 = -3$ A in **Fig. 1.2b** indicates that at any point in the wire shown, 3 C of charge pass from right to left each second. Therefore, it is important to specify not only the magnitude of the variable representing the current but also its direction.

The two types of current that we encounter often in our daily lives, alternating current (ac) and direct current (dc), are shown as a function of time in **Fig. 1.3**. *Alternating current* is the common current found in every household and is used to run the refrigerator, stove, washing

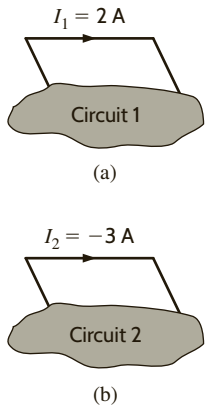

Figure 1.2

Conventional current flow: (a) positive current flow; (b) negative current flow.

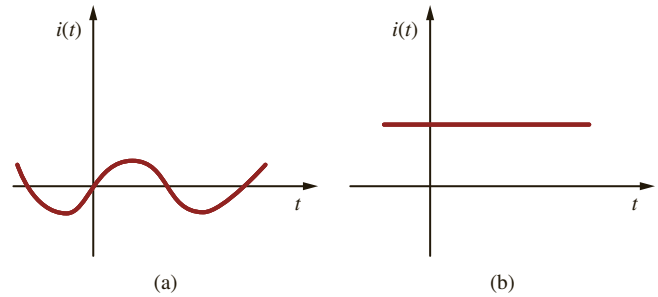

Figure 1.3

Two common types of current: (a) alternating current (ac); (b) direct current (dc).

machine, and so on. Batteries, which are used in automobiles and flashlights, are one source of *direct current*. In addition to these two types of currents, which have a wide variety of uses, we can generate many other types of currents. We will examine some of these other types later in the book. In the meantime, it is interesting to note that the magnitude of currents in elements familiar to us ranges from soup to nuts, as shown in **Fig. 1.4**.

We have indicated that charges in motion yield an energy transfer. Now we define the *voltage* (also called the *electromotive force*, or *potential*) between two points in a circuit as the difference in energy level of a unit charge located at each of the two points. Voltage is very similar to a gravitational force. Think about a bowling ball being dropped from a ladder into a tank of water. As soon as the ball is released, the force of gravity pulls it toward the bottom of the tank. The potential energy of the bowling ball decreases as it approaches the bottom. The gravitational force is pushing the bowling ball through the water. Think of the bowling ball as a charge and the voltage as the force pushing the charge through a circuit. Charges in motion represent a current, so the motion of the bowling ball could be thought of as a current. The water in the tank will resist the motion of the bowling ball. The motion of charges in an electric circuit will be impeded or resisted as well. We will introduce the concept of resistance in Chapter 2 to describe this effect.

Work or energy, $w(t)$ or W, is measured in joules (J); 1 joule is 1 newton meter (N·m). Hence, voltage [$v(t)$ or V] is measured in volts (V) and 1 volt is 1 joule per coulomb; that is, 1 volt = 1 joule per coulomb = 1 newton meter per coulomb. If a unit positive charge is moved between two points, the energy required to move it is the difference in energy level between the two points and is the defined voltage. It is extremely important that the variables

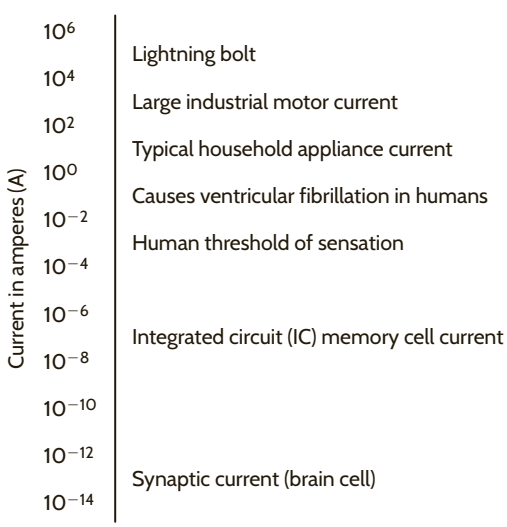

Figure 1.4

Typical current magnitudes.

Figure 1.5
Voltage representations.

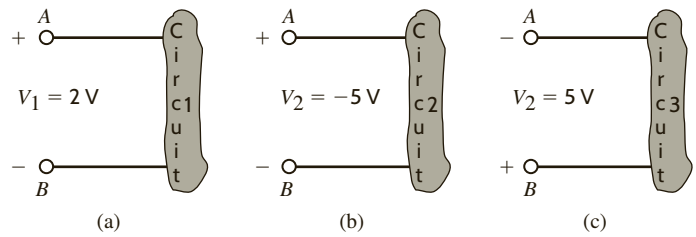

used to represent voltage between two points be defined in such a way that the solution will let us interpret which point is at the higher potential with respect to the other.

In **Fig. 1.5a** the variable that represents the voltage between points A and B has been defined as V_1, and it is assumed that point A is at a higher potential than point B, as indicated by the + and − signs associated with the variable and defined in the figure. The + and − signs define a reference direction for V_1. If $V_1 = 2$ V, then the difference in potential of points A and B is 2 V and point A is at the higher potential. If a unit positive charge is moved from point A through the circuit to point B, it will give up energy to the circuit and have 2 J less energy when it reaches point B. If a unit positive charge is moved from point B to point A, extra energy must be added to the charge by the circuit, and hence the charge will end up with 2 J more energy at point A than it started with at point B.

For the circuit in **Fig. 1.5b**, $V_2 = -5$ V means that the potential between points A and B is 5 V and point B is at the higher potential. The voltage in Fig. 1.5b can be expressed as shown in **Fig. 1.5c**. In this equivalent case, the difference in potential between points A and B is $V_2 = 5$ V, and point B is at the higher potential.

Note that it is important to define a variable with a reference direction so that the answer can be interpreted to give the physical condition in the circuit. We will find that it is not possible in many cases to define the variable so that the answer is positive, and we will also find that it is not necessary to do so.

As demonstrated in Figs. 1.5b and c, a negative number for a given variable, for example, V_2 in Fig. 1.5b, gives exactly the same information as a positive number; that is, V_2 in Fig. 1.5c, except that it has an opposite reference direction. Hence, when we define either current or voltage, it is absolutely necessary that we specify both magnitude and direction. Therefore, it is incomplete to say that the voltage between two points is 10 V or the current in a line is 2 A, since only the magnitude and not the direction for the variables has been defined.

The range of magnitudes for voltage, equivalent to that for currents in Fig. 1.4, is shown in **Fig. 1.6**. Once again, note that this range spans many orders of magnitude.

At this point we have presented the conventions that we employ in our discussions of current and voltage. *Energy* is yet another important term of basic significance. Let's investigate the voltage–current relationships for energy transfer using the flashlight shown in **Fig. 1.7**. The basic elements of a flashlight are a battery, a switch, a light bulb, and connecting wires. Assuming a good battery, we all know that the light bulb will glow when the switch is closed. A current now flows in this closed circuit as charges flow out of the positive terminal of the battery through the switch and light bulb and back into the negative terminal of the battery. The current heats up the filament in the bulb, causing it to glow and emit light. The light bulb converts electrical energy to thermal energy; as a result, charges passing through the bulb lose energy. These charges acquire energy as they pass through the battery as chemical energy is converted to electrical energy. An energy conversion process is occurring in the flashlight as the chemical energy in the battery is converted to electrical energy, which is then converted to thermal energy in the light bulb.

Let's redraw the flashlight as shown in **Fig. 1.8**. There is a current I flowing in this diagram. Since we know that the light bulb uses energy, the charges coming out of the bulb have less energy than those entering the light bulb. In other words, the charges expend energy as they move through the bulb. This is indicated by the voltage shown across the bulb. The charges gain energy as they pass through the battery, which is indicated by the voltage across the battery. Note the voltage–current relationships for the battery and bulb. We know that the bulb is absorbing energy; the current is entering the positive terminal of the voltage. For

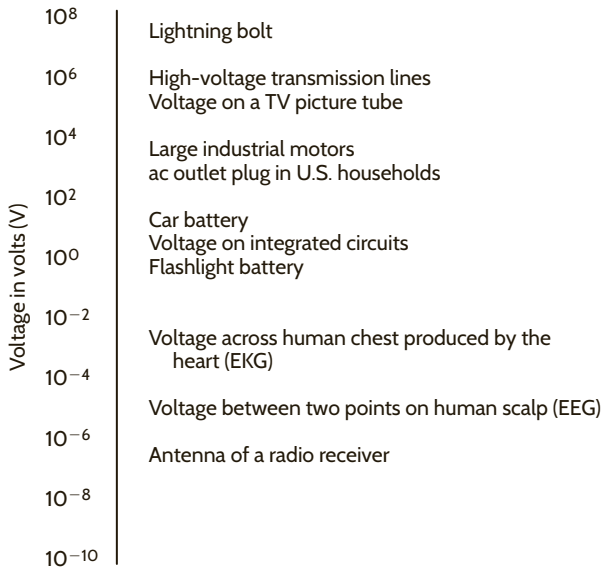

Figure 1.6
Typical voltage magnitudes.

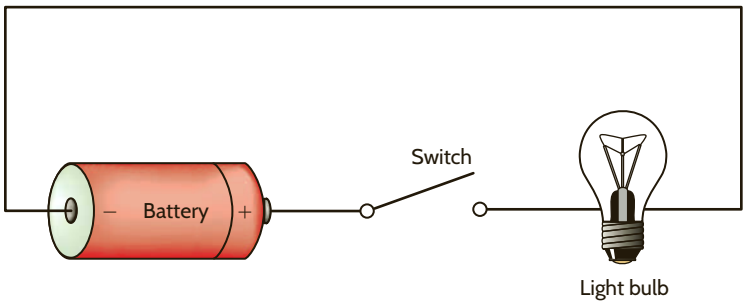

Figure 1.7
Flashlight circuit.

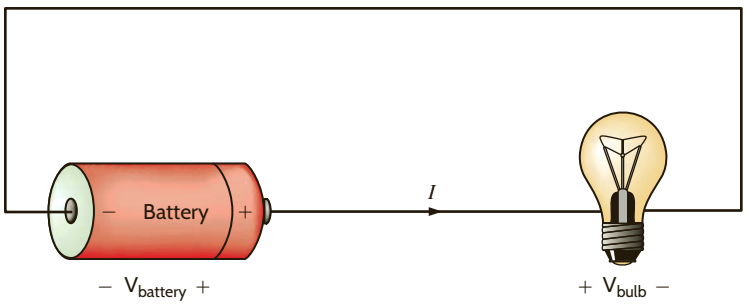

Figure 1.8
Flashlight circuit with voltages and current.

the battery, the current is leaving the positive terminal, which indicates that energy is being supplied.

This is further illustrated in **Fig. 1.9**, where a circuit element has been extracted from a larger circuit for examination. In **Fig. 1.9a**, energy is being supplied *to* the element by whatever is attached to the terminals. Note that 2 A—that is, 2 C of charge—are moving from point *A* to point *B* through the element each second. Each coulomb loses 3 J of energy as it passes through the element from point *A* to point *B*. Therefore, the element is absorbing 6 J of energy per second. Note that when the element is *absorbing* energy, a positive current enters the positive terminal. In **Fig. 1.9b** energy is being supplied *by* the element to whatever is connected to terminals *A*-*B*. In this case, note that when the element is *supplying* energy, a positive current enters the negative terminal and leaves via the positive terminal. In this convention, a negative current in one direction is equivalent to a positive current in the opposite direction, and vice versa. Similarly, a negative voltage in one direction is equivalent to a positive voltage in the opposite direction.

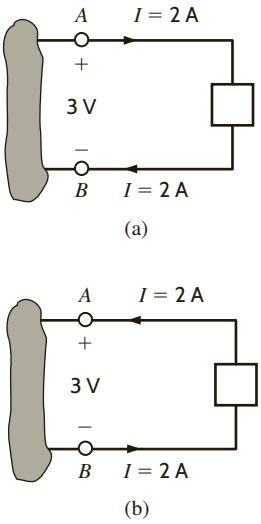

Figure 1.9
Voltage–current relationships for (a) energy absorbed and (b) energy supplied.

EXAMPLE 1.1

Suppose that your car will not start. To determine whether the battery is faulty, you turn on the light switch and find that the lights are very dim, indicating a weak battery. You borrow a friend's car and a set of jumper cables. However, how do you connect his car's battery to yours? What do you want his battery to do?

SOLUTION

Essentially, his car's battery must supply energy to yours, and therefore it should be connected in the manner shown in Fig. 1.10. Note that the positive current leaves the positive terminal of the good battery (supplying energy) and enters the positive terminal of the weak battery (absorbing energy). Note that the same connections are used when charging a battery.

Figure 1.10

Diagram for Example 1.1.

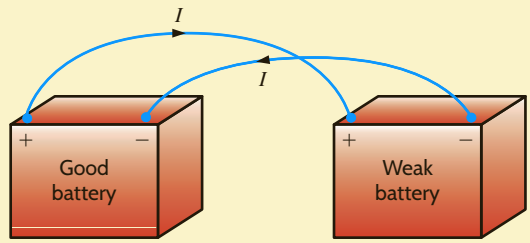

In practical applications, there are often considerations other than simply the electrical relations (e.g., safety). Such is the case with jump-starting an automobile. Automobile batteries produce explosive gases that can be ignited accidentally, causing severe physical injury. Be safe—follow the procedure described in your auto owner's manual.

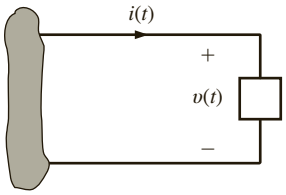

Figure 1.11

Sign convention for power.

We have defined voltage in joules per coulomb as the energy required to move a positive charge of 1 C through an element. If we assume that we are dealing with a differential amount of charge and energy, then

$$v = \frac{dw}{dq} \tag{1.2}$$

Multiplying this quantity by the current in the element yields

$$vi = \frac{dw}{dq}\left(\frac{dq}{dt}\right) = \frac{dw}{dt} = p \tag{1.3}$$

which is the time rate of change of energy or power measured in joules per second, or watts (W). Since, in general, both v and i are functions of time, p is also a time-varying quantity. Therefore, the change in energy from time t_1 to time t_2 can be found by integrating Eq. (1.3); that is,

$$\Delta w = \int_{t_1}^{t_2} p\,dt = \int_{t_1}^{t_2} vi\,dt \tag{1.4}$$

HINT

The passive sign convention is used to determine whether power is being absorbed or supplied.

At this point, let us summarize our sign convention for power. To determine the sign of any of the quantities involved, the variables for the current and voltage should be arranged as shown in Fig. 1.11. The variable for the voltage $v(t)$ is defined as the voltage across the element with the positive reference at the same terminal that the current variable $i(t)$ is entering. This convention is called the *passive sign convention* and will be so noted in the remainder of this book. The product of v and i, with their attendant signs, will determine the magnitude and sign of the power. If the sign of the power is positive, power is being absorbed by the element; if the sign is negative, power is being supplied by the element.

EXAMPLE 1.2

Given the two diagrams shown in Fig. 1.12, determine whether the element is absorbing or supplying power and how much.

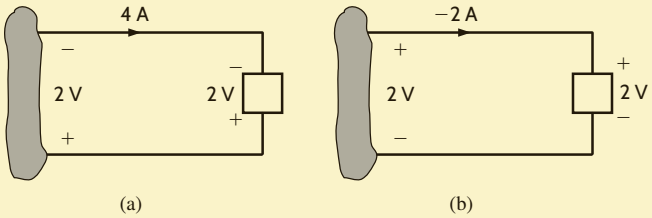

Figure 1.12 Elements for Example 1.2.

SOLUTION

In Fig. 1.12a, the power is $P = (2\text{ V})(-4\text{ A}) = -8\text{ W}$. Therefore, the element is supplying power. In Fig. 1.12b, the power is $P = (2\text{ V})(-2\text{ A}) = -4\text{ W}$. Therefore, the element is supplying power.

LEARNING ASSESSMENT

E1.1 Determine the amount of power absorbed or supplied by the elements in Fig. E1.1.

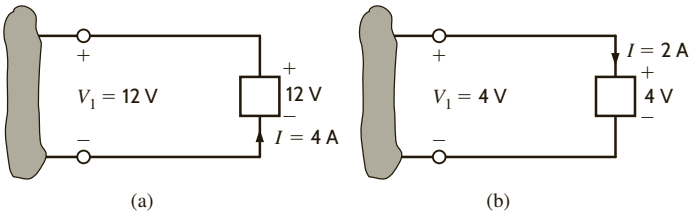

Figure E1.1

ANSWER:
(a) $P = -48$ W;
(b) $P = 8$ W.

EXAMPLE 1.3

We wish to determine the unknown voltage or current in Fig. 1.13.

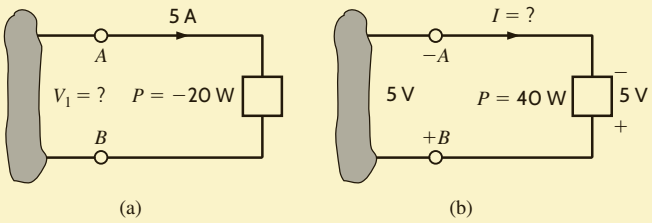

Figure 1.13 Elements for Example 1.3.

SOLUTION

In Fig. 1.13a, a power of −20 W indicates that the element is delivering power. Therefore, the current enters the negative terminal (terminal A), and from Eq. (1.3) the voltage is 4 V. Thus, B is the positive terminal, A is the negative terminal, and the voltage between them is 4 V.

In Fig. 1.13b, a power of +40 W indicates that the element is absorbing power and, therefore, the current should enter the positive terminal B. The current thus has a value of −8 A, as shown in the figure.

LEARNING ASSESSMENT

E1.2 Determine the unknown variables in Fig. E1.2.

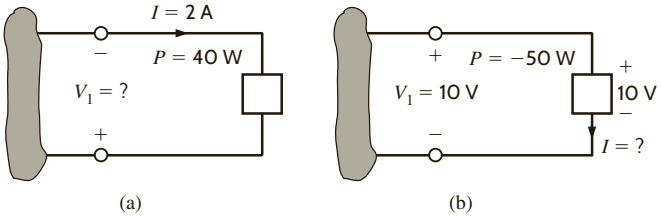

Figure E1.2

ANSWER:
(a) $V_1 = -20$ V;
(b) $I = -5$ A.

Finally, it is important to note that our electrical networks satisfy the principle of conservation of energy. Because of the relationship between energy and power, it can be implied that power is also conserved in an electrical network. This result was formally stated in 1952 by B. D. H. Tellegen and is known as Tellegen's theorem—the sum of the powers absorbed by all elements in an electrical network is zero. Another statement of this theorem is that the power supplied in a network is exactly equal to the power absorbed. Checking to verify that Tellegen's theorem is satisfied for a particular network is one way to check our calculations when analyzing electrical networks.

1.3 Circuit Elements

Thus far, we have defined voltage, current, and power. In the remainder of this chapter we will define both independent and dependent current and voltage sources. Although we will assume ideal elements, we will try to indicate the shortcomings of these assumptions as we proceed with the discussion.

In general, the elements we will define are terminal devices that are completely characterized by the current through the element and/or the voltage across it. These elements, which we will employ in constructing electric circuits, will be broadly classified as being either active or passive. The distinction between these two classifications depends essentially on one thing—whether they supply or absorb energy. As the words themselves imply, an *active* element is capable of generating energy and a *passive* element cannot generate energy.

However, later we will show that some passive elements are capable of storing energy. Typical active elements are batteries and generators. The three common passive elements are resistors, capacitors, and inductors.

In Chapter 2 we will launch an examination of passive elements by discussing the resistor in detail. Before proceeding with that element, we first present some very important active elements.

1. Independent voltage source
2. Independent current source
3. Two dependent voltage sources
4. Two dependent current sources

INDEPENDENT SOURCES An *independent voltage source* is a two-terminal element that maintains a specified voltage between its terminals *regardless of the current through it* as shown by the v-i plot in **Fig. 1.14a**. The general symbol for an independent source, a circle, is also shown in Fig. 1.14a. As the figure indicates, terminal A is $v(t)$ volts positive with respect to terminal B.

In contrast to the independent voltage source, the *independent current source* is a two-terminal element that maintains a specified current *regardless of the voltage across its terminals*, as illustrated by the v-i plot in **Fig. 1.14b**. The general symbol for an independent

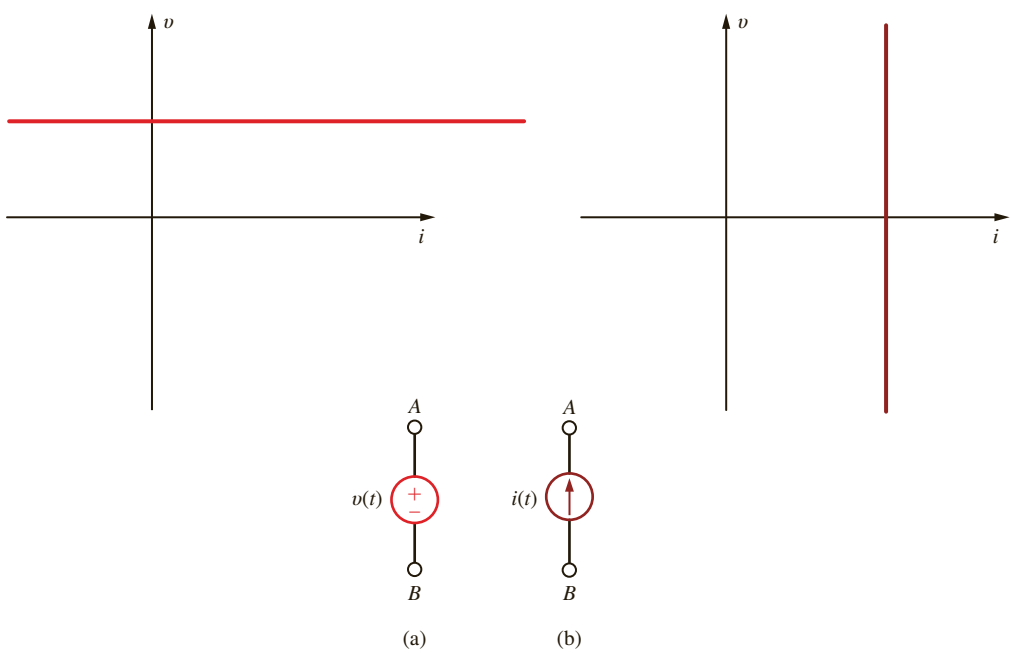

Figure 1.14
Symbols for (a) independent voltage source and (b) independent current source.

current source is also shown in Fig. 1.14b, where $i(t)$ is the specified current and the arrow indicates the positive direction of current flow.

In their normal mode of operation, independent sources supply power to the remainder of the circuit. However, they may also be connected into a circuit in such a way that they absorb power. A simple example of this latter case is a battery-charging circuit such as that shown in Example 1.1.

It is important that we pause here to interject a comment concerning a shortcoming of the models. In general, mathematical models approximate actual physical systems only under a certain range of conditions. Rarely does a model accurately represent a physical system under every set of conditions. To illustrate this point, consider the model for the voltage source in Fig. 1.14a. We assume that the voltage source delivers v volts regardless of what is connected to its terminals. Theoretically, we could adjust the external circuit so that an infinite amount of current would flow, and therefore the voltage source would deliver an infinite amount of power. This is, of course, physically impossible. A similar argument could be made for the independent current source. Hence, the reader is cautioned to keep in mind that models have limitations and thus are valid representations of physical systems only under certain conditions.

For example, can the independent voltage source be utilized to model the battery in an automobile under all operating conditions? With the headlights on, turn on the radio. Do the headlights dim with the radio on? They probably won't if the sound system in your automobile was installed at the factory. If you try to crank your car with the headlights on, you will notice that the lights dim. The starter in your car draws considerable current, thus causing the voltage at the battery terminals to drop and dimming the headlights. The independent voltage source is a good model for the battery with the radio turned on; however, an improved model is needed for your battery to predict its performance under cranking conditions.

EXAMPLE 1.4

Determine the power absorbed or supplied by the elements in the network in Fig. 1.15.

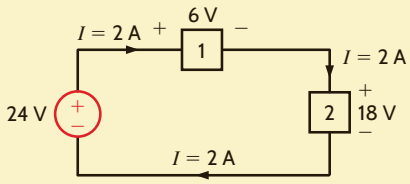

Figure 1.15
Network for Example 1.4.

HINT
Elements that are connected in series have the same current.

SOLUTION

The current flow is out of the positive terminal of the 24-V source, and therefore this element is supplying (2)(24) = 48 W of power. The current is into the positive terminals of elements 1 and 2, and therefore elements 1 and 2 are absorbing (2)(6) = 12 W and (2)(18) = 36 W, respectively. Note that the power supplied is equal to the power absorbed.

LEARNING ASSESSMENT

E1.3 Find the power that is absorbed or supplied by the elements in Fig. E1.3.

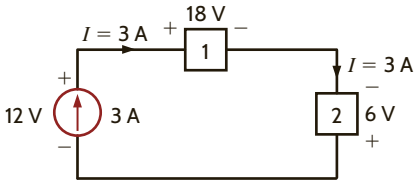

Figure E1.3

ANSWER:
Current source supplies 36 W, element 1 absorbs 54 W, and element 2 supplies 18 W.

Figure 1.16
Four different types of dependent sources.

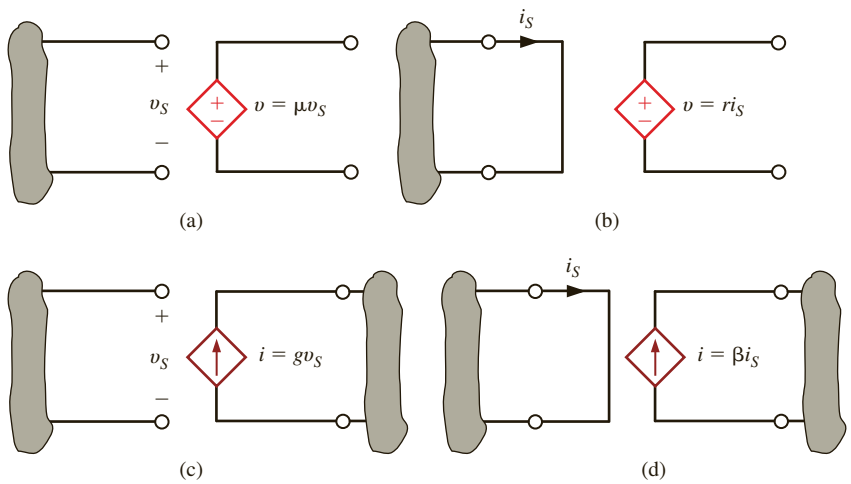

DEPENDENT SOURCES In contrast to the independent sources, which produce a particular voltage or current completely unaffected by what is happening in the remainder of the circuit, dependent sources generate a voltage or current that is determined by a voltage or current at a specified location in the circuit. These sources are very important because they are an integral part of the mathematical models used to describe the behavior of many electronic circuit elements.

For example, metal-oxide-semiconductor field-effect transistors (MOSFETs) and bipolar transistors, both of which are commonly found in a host of electronic equipment, are modeled with dependent sources, and therefore the analysis of electronic circuits involves the use of these controlled elements.

In contrast to the circle used to represent independent sources, a diamond is used to represent a dependent or controlled source. **Fig. 1.16** illustrates the four types of dependent sources. The input terminals on the left represent the voltage or current that controls the dependent source, and the output terminals on the right represent the output current or voltage of the controlled source. Note that in **Figs. 1.16a** and **d**, the quantities μ and β are dimensionless constants because we are transforming voltage to voltage and current to current. This is not the case in **Figs. 1.16b** and **c**; hence, when we employ these elements a short time later, we must describe the units of the factors r and g.

EXAMPLE 1.5

Given the two networks shown in **Fig. 1.17**, we wish to determine the outputs.

SOLUTION

In **Fig. 1.17a**, the output voltage is $V_o = \mu V_S$ or $V_o = 20\ V_S = (20)(2\ \text{V}) = 40\ \text{V}$. Note that the output voltage has been amplified from 2 V at the input terminals to 40 V at the output terminals; that is, the circuit is a voltage amplifier with an amplification factor of 20.

Figure 1.17
Circuits for Example 1.5.

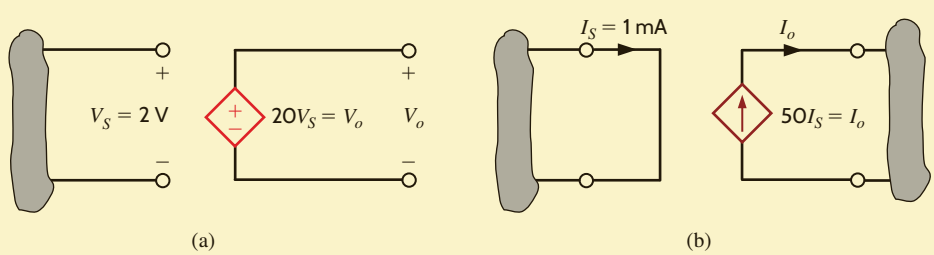

In **Fig. 1.17b**, the output current is $I_o = \beta I_S = (50)(1\ \text{mA}) = 50\ \text{mA}$; that is, the circuit has a current gain of 50, meaning that the output current is 50 times greater than the input current.

LEARNING ASSESSMENT

E1.4 Determine the power supplied by the dependent sources in Fig. E1.4.

ANSWER:
(a) Power supplied = 80 W;
(b) power supplied = 160 W.

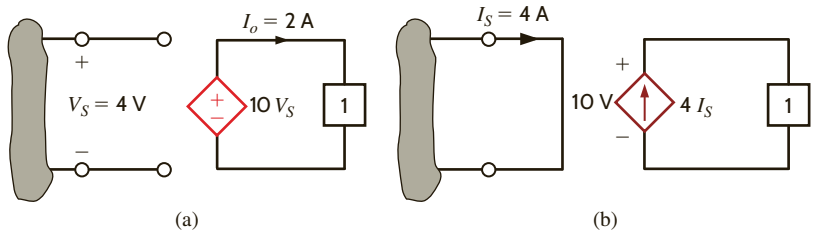

Figure E1.4

EXAMPLE 1.6

Calculate the power absorbed by each element in the network of **Fig. 1.18**. Also verify that Tellegen's theorem is satisfied by this network.

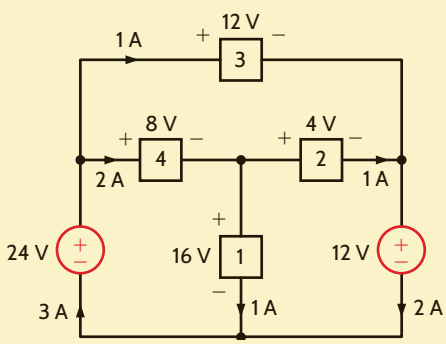

Figure 1.18
Circuit used in Example 1.6.

SOLUTION

Let's calculate the power absorbed by each element using the sign convention for power.

$$P_1 = (16)(1) = 16 \text{ W}$$
$$P_2 = (4)(1) = 4 \text{ W}$$
$$P_3 = (12)(1) = 12 \text{ W}$$
$$P_4 = (8)(2) = 16 \text{ W}$$
$$P_{12\text{ V}} = (12)(2) = 24 \text{ W}$$
$$P_{24\text{ V}} = (24)(-3) = -72 \text{ W}$$

Note that to calculate the power absorbed by the 24-V source, the current of 3 A flowing up through the source was changed to a current −3 A flowing down through the 24-V source.

Let's sum up the power absorbed by all elements: $16 + 4 + 12 + 16 + 24 - 72 = 0$

This sum is zero, which verifies that Tellegen's theorem is satisfied.

EXAMPLE 1.7

Use Tellegen's theorem to find the current I_o in the network in Fig. 1.19.

Figure 1.19
Circuit used in Example 1.7.

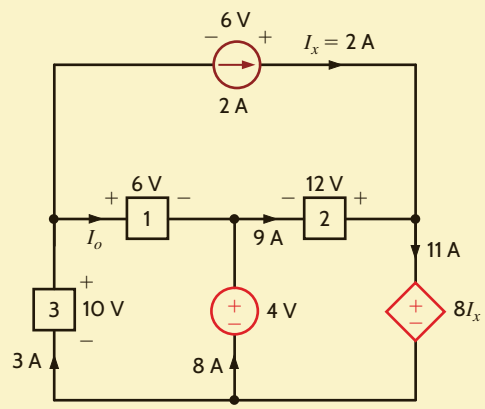

SOLUTION

First, we must determine the power absorbed by each element in the network. Using the sign convention for power, we find

$$P_{2A} = (6)(-2) = -12 \text{ W}$$
$$P_1 = (6)(I_o) = 6I_o \text{ W}$$
$$P_2 = (12)(-9) = -108 \text{ W}$$
$$P_3 = (10)(-3) = -30 \text{ W}$$
$$P_{4V} = (4)(-8) = -32 \text{ W}$$
$$P_{DS} = (8I_x)(11) = (16)(11) = 176 \text{ W}$$

Applying Tellegen's theorem yields

$$-12 + 6I_o - 108 - 30 - 32 + 176 = 0$$

or

$$6I_o + 176 = 12 + 108 + 30 + 32$$

Hence,

$$I_o = 1\text{A}$$

LEARNING ASSESSMENTS

E1.5 Find the power that is absorbed or supplied by the circuit elements in the network in Fig. E1.5.

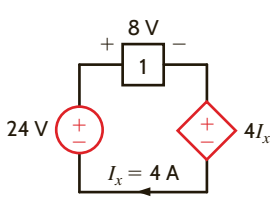

Figure E1.5

ANSWER:
$P_{24\,V} = 96$ W supplied;
$P_1 = 32$ W absorbed;
$P_{4I_x} = 64$ W absorbed.

E1.6 Find the power that is absorbed or supplied by the network elements in Fig. E1.6.

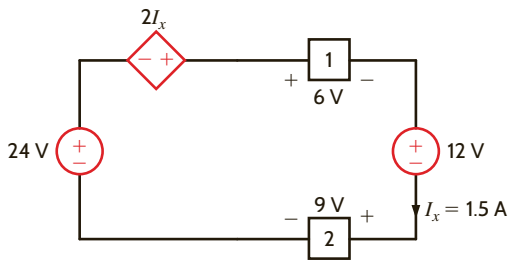

Figure E1.6

ANSWER:
$P_{24\text{ V}} = 36$ W supplied;
$P_{12\text{ V}} = 18$ W absorbed;
$P_{21_x} = 4.5$ W supplied;
$P_1 = 9$ W absorbed;
$P_2 = 13.5$ W absorbed.

E1.7 Find I_x in Fig. E1.7 using Tellegen's theorem.

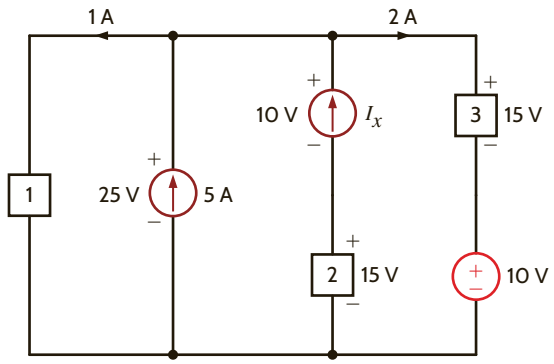

Figure E1.7

ANSWER:
$I_x = -2$ A.

EXAMPLE 1.8

The charge that enters the BOX is shown in Fig. 1.20. Calculate and sketch the current flowing into and the power absorbed by the BOX between 0 and 10 milliseconds.

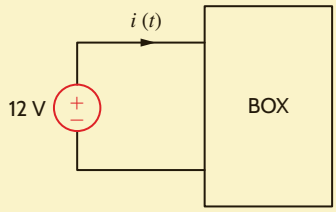

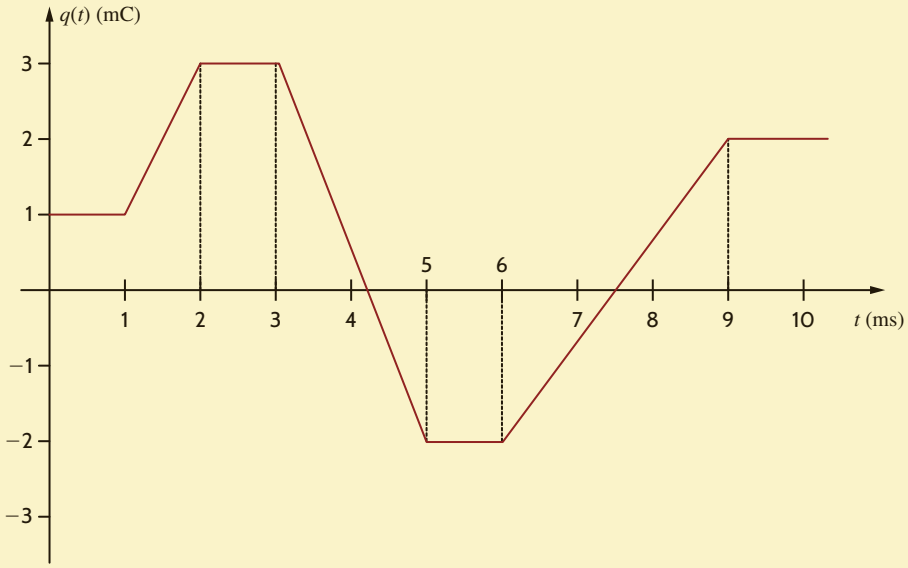

Figure 1.20
Diagrams for Example 1.8.

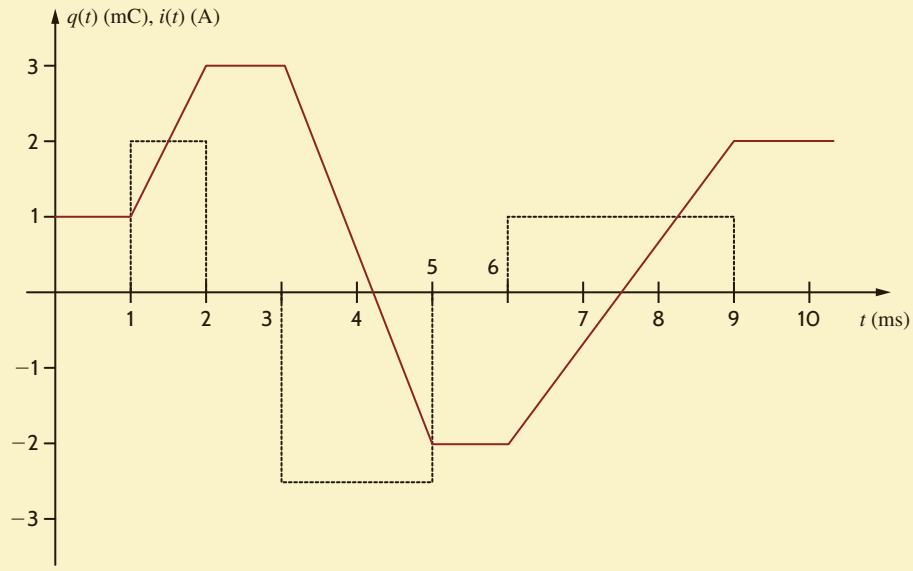

Figure 1.21
Charge and current waveforms for Example 1.8.

SOLUTION

Recall that current is related to charge by $i(t) = \dfrac{dq(t)}{dt}$. The current is equal to the slope of the charge waveform.

$$i(t) = 0 \qquad 0 \le t \le 1 \text{ ms}$$

$$i(t) = \frac{3 \times 10^{-3} - 1 \times 10^{-3}}{2 \times 10^{-3} - 1 \times 10^{-3}} = 2 \text{ A} \qquad 1 \le t \le 2 \text{ ms}$$

$$i(t) = 0 \qquad 2 \le t \le 3 \text{ ms}$$

$$i(t) = \frac{-2 \times 10^{-3} - 3 \times 10^{-3}}{5 \times 10^{-3} - 3 \times 10^{-3}} = -2.5 \text{ A} \qquad 3 \le t \le 5 \text{ ms}$$

$$i(t) = 0 \qquad 5 \le t \le 6 \text{ ms}$$

$$i(t) = \frac{2 \times 10^{-3} - (-2 \times 10^{-3})}{9 \times 10^{-3} - 6 \times 10^{-3}} = 1.33 \text{ A} \qquad 6 \le t \le 9 \text{ ms}$$

$$i(t) = 0 \qquad t \ge 9 \text{ ms}$$

The current is plotted with the charge waveform in **Fig. 1.21**. Note that the current is zero during times when the charge is a constant value. When the charge is increasing, the current is positive, and when the charge is decreasing, the current is negative.

The power absorbed by the BOX is $12 \times i(t)$.

$$p(t) = 12(0) = 0 \qquad 0 \le t \le 1 \text{ ms}$$

$$p(t) = 12(2) = 24 \text{ W} \qquad 1 \le t \le 2 \text{ ms}$$

$$p(t) = 12(0) = 0 \qquad 2 \le t \le 3 \text{ ms}$$

$$p(t) = 12(-2.5) = -30 \text{ W} \qquad 3 \le t \le 5 \text{ ms}$$

$$p(t) = 12(0) = 0 \qquad 5 \le t \le 6 \text{ ms}$$

$$p(t) = 12(1.33) = 16 \text{ W} \qquad 6 \le t \le 9 \text{ ms}$$

$$p(t) = 12(0) = 0 \qquad t \ge 9 \text{ ms}$$

The power absorbed by the BOX is plotted in **Fig. 1.22**. For the time intervals, $1 \le t \le 2$ ms and $6 \le t \le 9$ ms, the BOX is absorbing power. During the time interval $3 \le t \le 5$ ms, the power absorbed by the BOX is negative, which indicates that the BOX is supplying power to the 12-V source.

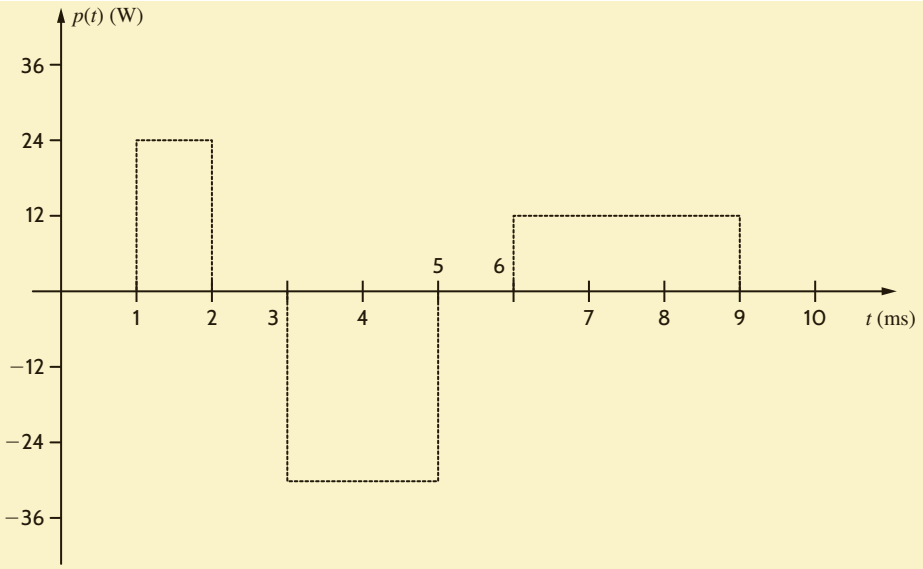

Figure 1.22
Power waveform for Example 1.8.

LEARNING ASSESSMENTS

E1.8 The power absorbed by the BOX in Fig. E1.8 is $p(t) = 2.5e^{-4t}$ W. Compute the energy and charge delivered to the BOX in the time interval $0 < t < 250$ ms.

ANSWER:
395.1 mJ; 8.8 mC.

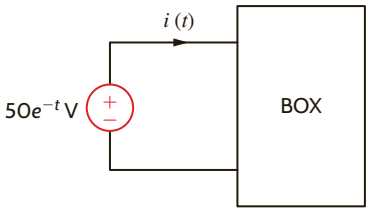

Figure E1.8

E1.9 The energy absorbed by the BOX in Fig. E1.9 is given below. Calculate and sketch the current flowing into the BOX. Also calculate the charge that enters the BOX between 0 and 12 seconds.

ANSWER:
$Q = 0$.

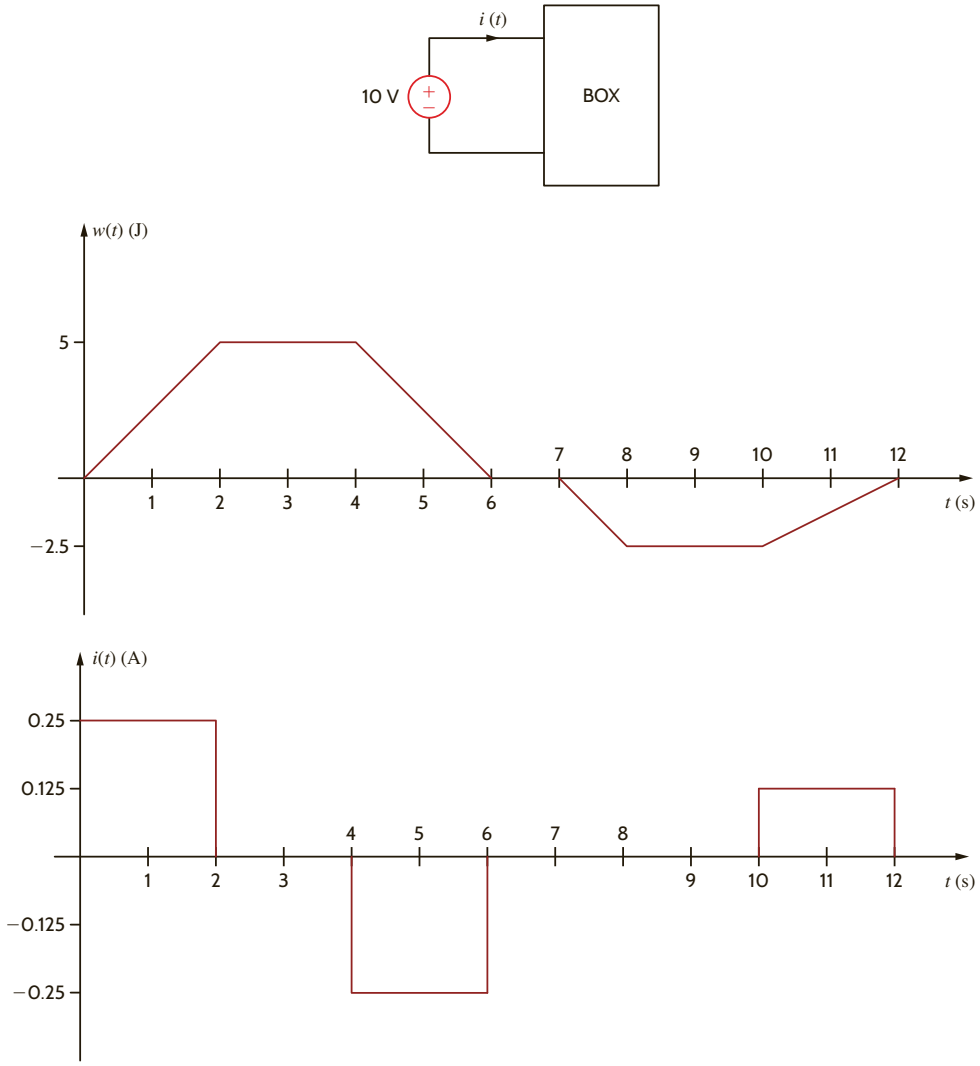

Figure E1.9

EXAMPLE 1.9

The ubiquitous universal serial bus (USB) port is commonly utilized to charge smartphones, as shown in Fig. 1.23. Technical details for USB specifications can be found at www.usb.org. The amount of current that can be provided over a USB port is defined in the USB specifications.

According to the USB 2.0 standard, a device is classified as low power if it draws 100 mA or less and high power if it draws between 100 and 500 mA.

1. A 1000 mAh lithium-ion battery has been fully discharged (i.e., 0 mAh). How long will it take to recharge it from a USB port supplying a constant current of 250 mA? How much charge is stored in the battery when it is fully charged?

2. A fully charged 1000 mAh lithium-ion battery supplies a load, which draws a constant current of 200 mA for 4 hours. How much charge is left in the battery at the end of the 4 hours? Assuming that the load remains constant at 3.6 V, how much energy is absorbed by the load in joules?

©abalcazar/iStockphoto

Figure 1.23
Charging an Apple iPhone® using a USB port.

SOLUTION

1. With a constant current of 250 mA, the time required to recharge the battery is 1000 mAh /250 mA = 4 h. The battery has a capacity of 1000 mAh. The charge stored in the battery when fully charged is 1000 mAh × 1 A/1000 mA × 3600 s/h = 3600 As = 3600 C.
2. A constant current of 200 mA is drawn from the battery for 4 hours, so 800 mAh × 1 A/1000 mA × 3600 s/h = 2880 C removed from the battery. The charge left in the battery is 3600 − 2880 = 720 C. The power absorbed by the load is 3.6 V × 0.2 A = 0.72 W. The energy absorbed by the load is 0.72 W × 4 h × 3600 s/h = 10,368 J.

SUMMARY

- ***The standard prefixes employed***

p = 10^{-12}	k = 10^{3}
n = 10^{-9}	M = 10^{6}
μ = 10^{-6}	G = 10^{9}
m = 10^{-3}	T = 10^{12}

- ***The relationships between current and charge***

$$i(t) = \frac{dq(t)}{dt} \quad \text{or} \quad q(t) = \int_{-\infty}^{t} i(x)dx$$

- ***The relationships among power, energy, current, and voltage***

$$p = \frac{dw}{dt} = vi$$

$$\Delta w = \int_{t_1}^{t_2} p\, dt = \int_{t_1}^{t_2} vi\, dt$$

- ***The passive sign convention*** The passive sign convention states that if the voltage and current associated with an element are as shown in Fig. 1.11, the product of v and i, with their attendant signs, determines the magnitude and sign of the power. If the sign is positive, power is being absorbed by the element, and if the sign is negative, the element is supplying power.
- ***Independent and dependent sources*** An ideal independent voltage (current) source is a two-terminal element that maintains a specified voltage (current) between its terminals, regardless of the current (voltage) through (across) the element. Dependent or controlled sources generate a voltage or current that is determined by a voltage or current at a specified location in the circuit.
- ***Conservation of energy*** The electric circuits under investigation satisfy the conservation of energy.
- ***Tellegen's theorem*** The sum of the powers absorbed by all elements in an electrical network is zero.

PROBLEMS

1.1 If the current in an electric conductor is 2.4 A, how many coulombs of charge pass any point in a 30-second interval?

1.2 Determine the time interval required for a 12-A battery charger to deliver 4800 C.

1.3 A lightning bolt carrying 30,000 A lasts for 50 micro-seconds. If the lightning strikes an airplane flying at 20,000 feet, what is the charge deposited on the plane?

1.4 If a 12-V battery delivers 100 J in 5 s, find (a) the amount of charge delivered and (b) the current produced.

1.5 The current in a conductor is 1.5 A. How many coulombs of charge pass any point in a time interval of 1.5 minutes?

1.6 If 60 C of charge pass through an electric conductor in 30 seconds, determine the current in the conductor.

1.7 Determine the number of coulombs of charge produced by a 12-A battery charger in an hour.

1.8 Five coulombs of charge pass through the element in Fig. P1.8 from point A to point B. If the energy absorbed by the element is 120 J, determine the voltage across the element.

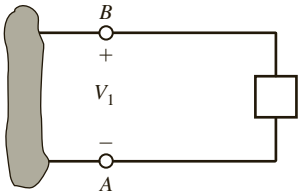

Figure P1.8

1.9 The current that enters an element is shown in Fig. P1.9. Find the charge that enters the element in the time interval $0 < t < 20$ s.

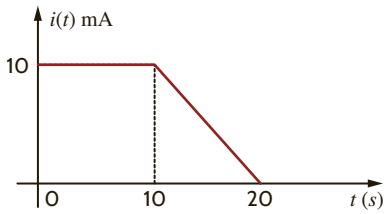

Figure P1.9

1.10 The charge entering the positive terminal of an element is $q(t) = -30e^{-4t}$ mC. If the voltage across the element is $120e^{-2t}$ V, determine the energy delivered to the element in the time interval $0 < t < 50$ ms.

1.11 The charge entering the positive terminal of an element is given by the expression $q(t) = -12e^{-2t}$ mC. The power delivered to the element is $p(t) = 2.4e^{-3t}$ W. Compute the current in the element, the voltage across the element, and the energy delivered to the element in the time interval $0 < t < 100$ ms.

1.12 The voltage across an element is $12e^{-2t}$ V. The current entering the positive terminal of the element is $2e^{-2t}$ A. Find the energy absorbed by the element in 1.5 s starting from $t = 0$.

1.13 The power absorbed by the BOX in Fig. P1.13 is $2e^{-2t}$ W. Calculate the amount of charge that enters the BOX between 0.1 and 0.4 seconds.

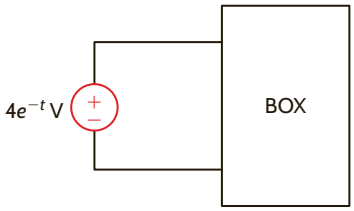

Figure P1.13

1.14 The power absorbed by the BOX in Fig. P1.14 is $0.1e^{-4t}$ W. Calculate the energy absorbed by the BOX during this same time interval.

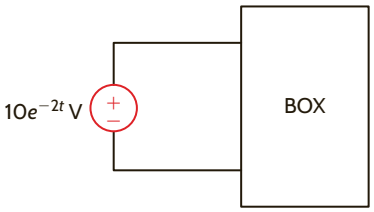

Figure P1.14

1.15 The energy absorbed by the BOX in Fig. P1.15 is shown below. How much charge enters the BOX between 0 and 10 milliseconds?

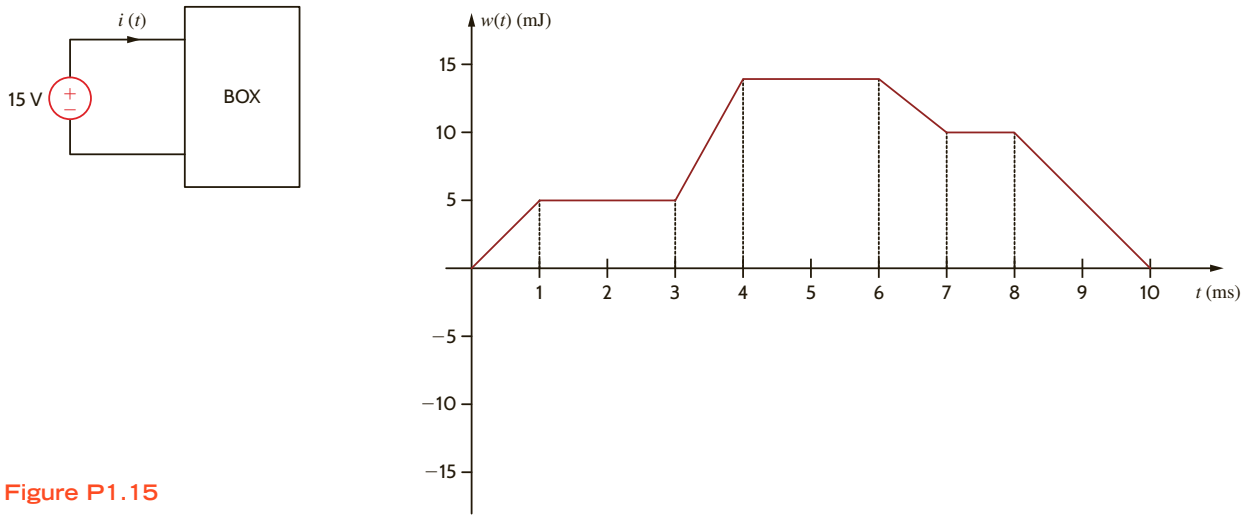

Figure P1.15

1.16 The charge that enters the BOX in Fig. P1.16 is shown in the graph below. Calculate and sketch the current flowing into and the power absorbed by the BOX between 0 and 10 milliseconds.

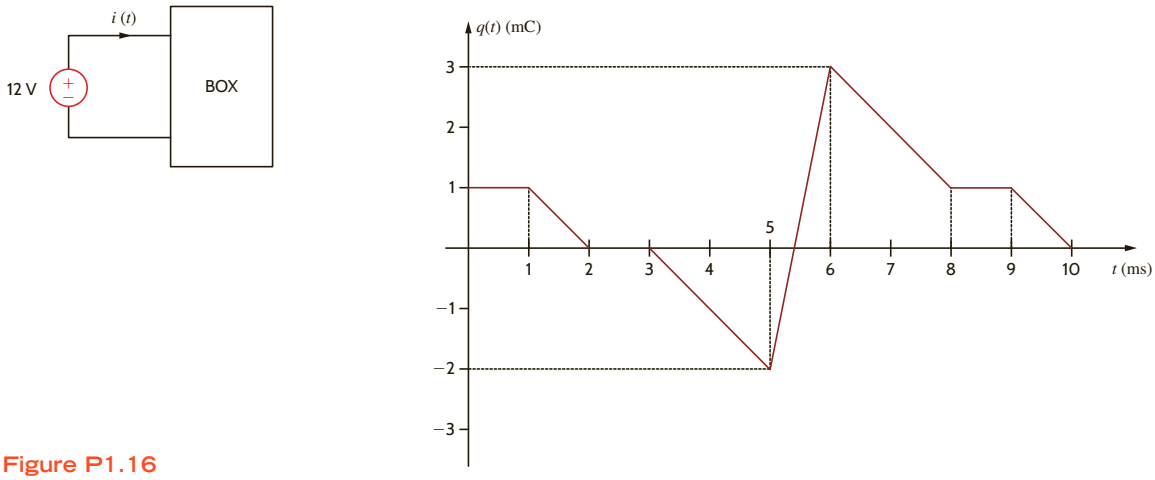

Figure P1.16

1.17 The energy absorbed by the BOX in Fig. P1.17 is given below. Calculate and sketch the current flowing into the BOX. Also calculate the charge which enters the BOX between 0 and 12 seconds.

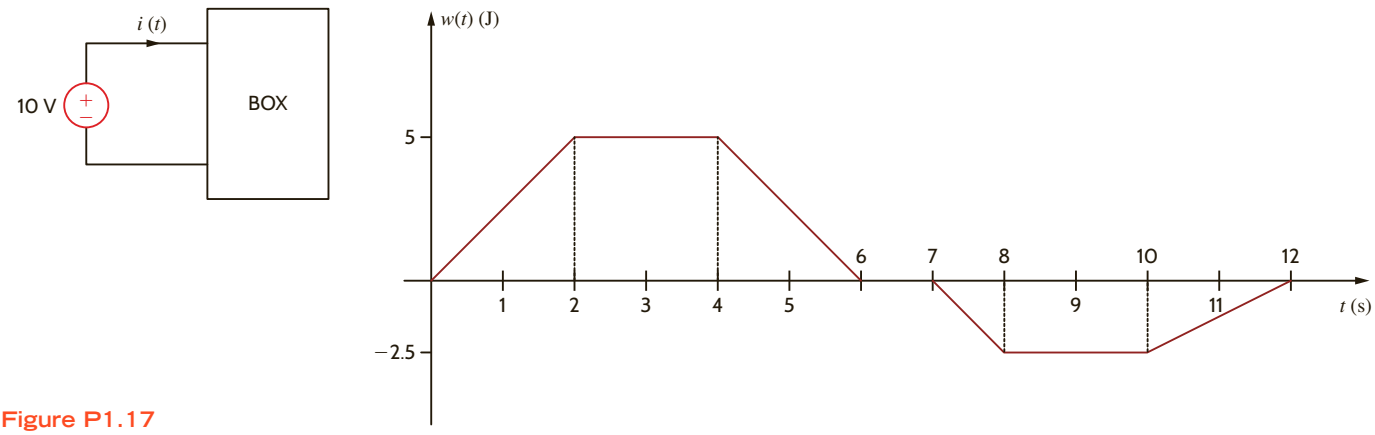

Figure P1.17

1.18 The charge entering the upper terminal of the BOX in Fig. P1.18 is shown below. How much energy is absorbed by the BOX between 0 and 9 seconds?

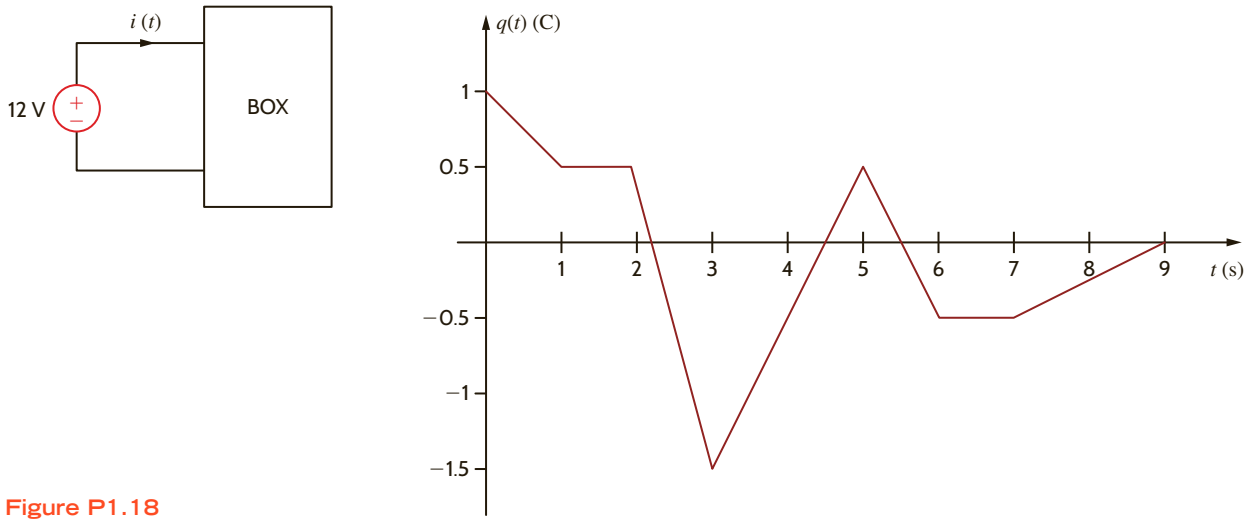

Figure P1.18

1.19 The energy absorbed by the BOX in Fig. P1.19 is shown in the graph below. Calculate and sketch the current flowing into the BOX between 0 and 10 milliseconds.

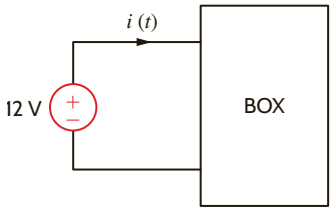

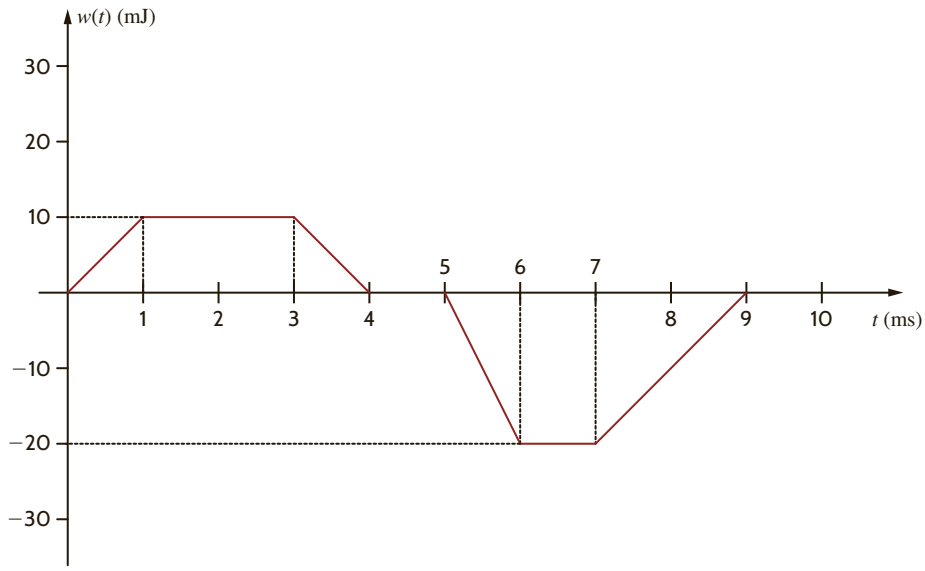

Figure P1.19

1.20 Determine the amount of power absorbed or supplied by the element in Fig. P1.20 if

(a) $V_1 = 9$ V and $I = 2$A

(b) $V_1 = 9$ V and $I = -3$A

(c) $V_1 = -12$ V and $I = 2$A

(d) $V_1 = -12$ V and $I = -3$A

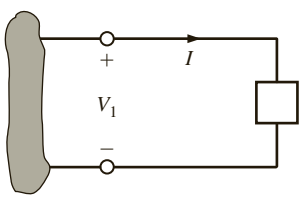

Figure P1.20

1.21 Calculate the power absorbed by element A in Fig. P1.21.

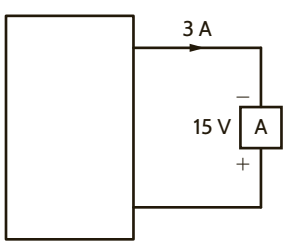

Figure P1.21

1.22 Calculate the power supplied by element A in Fig. P1.22.

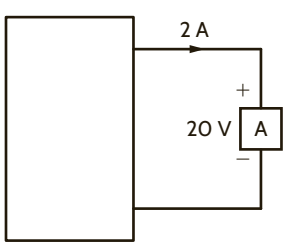

Figure P1.22

1.23 Element A in the diagram in Fig. P1.23 absorbs 30 W of power. Calculate V_x.

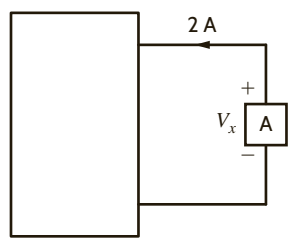

Figure P1.23

1.24 Element B in the diagram in Fig. P1.24 supplies 60 W of power. Calculate I_x.

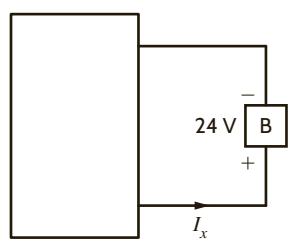

Figure P1.24

1.25 Element B in the diagram in Fig. P1.25 supplies 72 W of power. Calculate V_A.

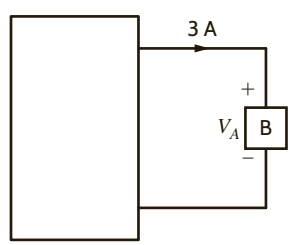

Figure P1.25

1.26 Element B in the diagram in Fig. P1.26 supplies 72 W of power. Calculate I_x.

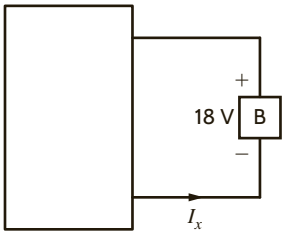

Figure P1.26

1.27 **(a)** In Fig. P1.27 (a), $P_1 = 36$ W. Is element 2 absorbing or supplying power, and how much?

(b) In Fig. P1.27 (b), $P_2 = -48$ W. Is element 1 absorbing or supplying power, and how much?

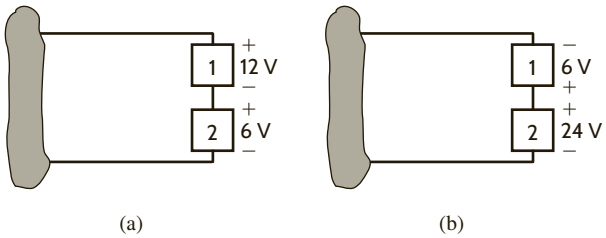

Figure P1.27

1.28 Two elements are connected in series, as shown in Fig. P1.28. Element 1 supplies 24 W of power. Is element 2 absorbing or supplying power, and how much?

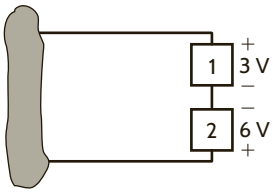

Figure P1.28

1.29 Element 2 in Fig. P1.29 absorbed 32 W. Find the power absorbed or supplied by elements 1 and 3.

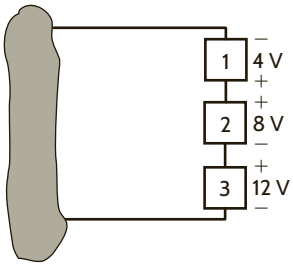

Figure P1.29

1.30 Choose I_s such that the power absorbed by element 2 in Fig. P1.30 is 7 W.

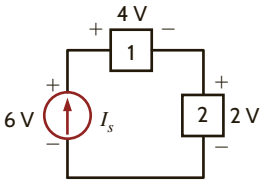

Figure P1.30

1.31 Find the power that is absorbed or supplied by the circuit elements in Fig. P1.31.

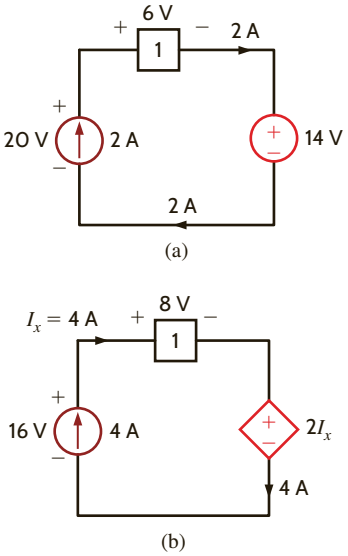

Figure P1.31

1.32 Find the power that is absorbed or supplied by the network elements in Fig. P1.32.

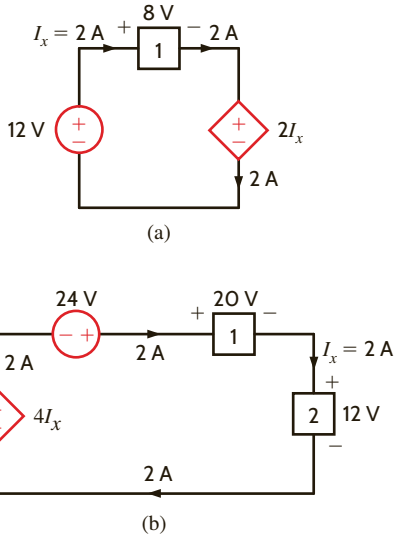

Figure P1.32

1.33 Compute the power that is absorbed or supplied by the elements in the network in Fig. P1.33.

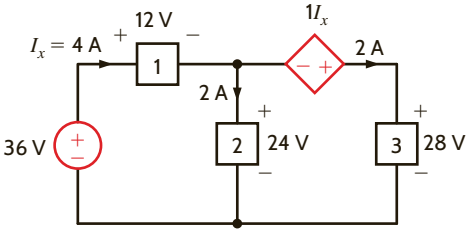

Figure P1.33

1.34 Find the power that is absorbed or supplied by element 2 in Fig. P1.34.

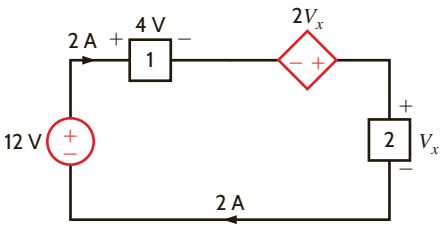

Figure P1.34

1.35 Find I_x in the network in Fig. P1.35.

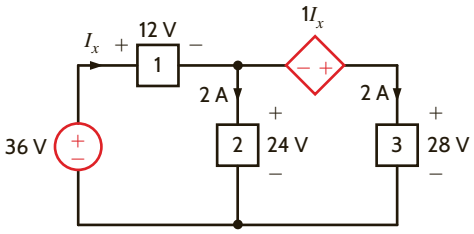

Figure P1.35

1.36 Determine the power absorbed by element 1 in Fig. P1.36.

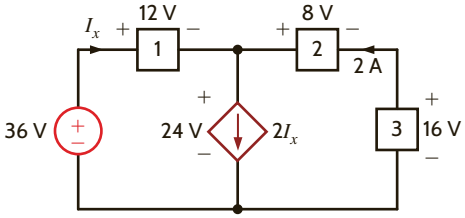

Figure P1.36

1.37 Find the power absorbed or supplied by element 1 in Fig. P1.37.

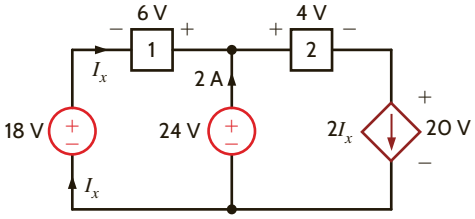

Figure P1.37

1.38 Find the power absorbed or supplied by element 3 in Fig. P1.38.

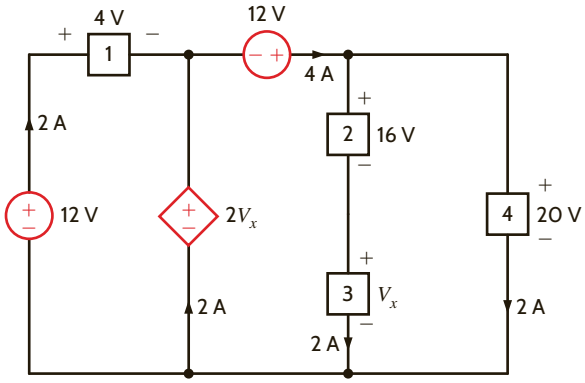

Figure P1.38

1.39 Find the power absorbed or supplied by element 1 in Fig. P1.39.

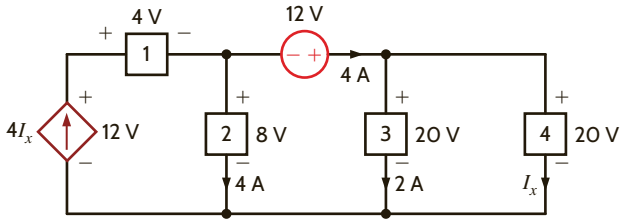

Figure P1.39

1.40 Find V_x in the network in Fig. P1.40 using Tellegen's theorem.

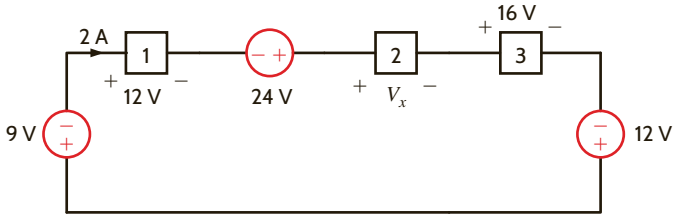

Figure P1.40

1.41 Find I_x in the circuit in Fig. P1.41 using Tellegen's theorem.

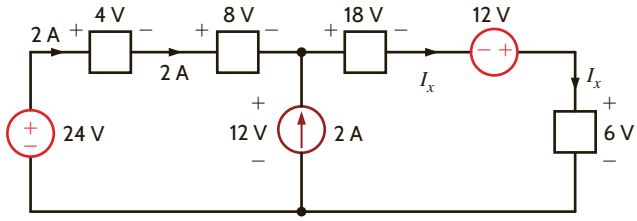

Figure P1.41

1.42 Is the source V_s in the network in Fig. P1.42 absorbing or supplying power, and how much?

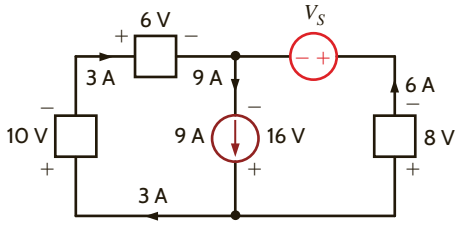

Figure P1.42

1.43 Find I_o in the network in Fig. P1.43 using Tellegen's theorem.

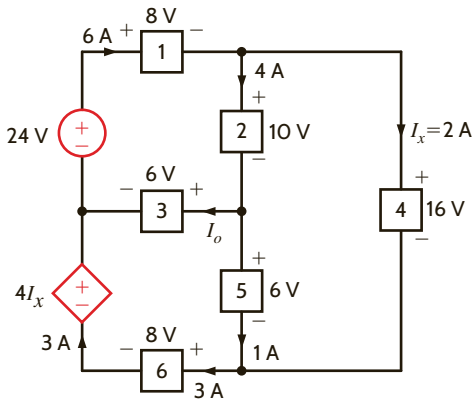

Figure P1.43

1.44 Calculate the power absorbed by each element in the circuit in Fig. P1.44. Also, verify that Tellegen's theorem is satisfied by this circuit.

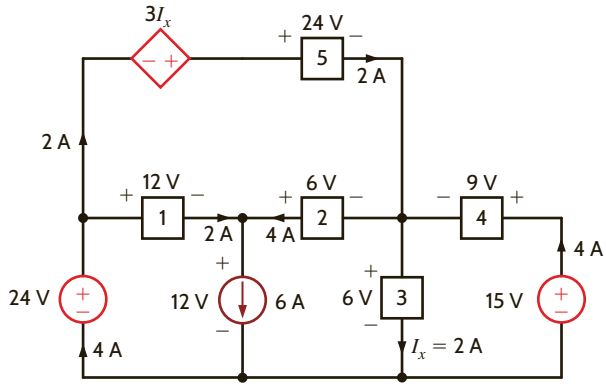

Figure P1.44

1.45 Calculate the power absorbed by each element in the circuit in Fig. P1.45. Also, verify that Tellegen's theorem is satisfied by this circuit.

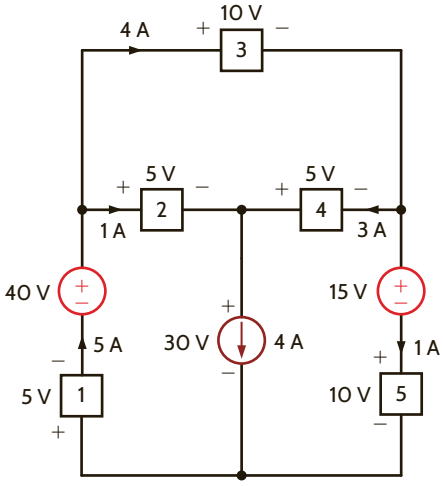

Figure P1.45

1.46 In the circuit in Fig. P1.46, element 1 absorbs 40 W, element 2 supplies 50 W, element 3 supplies 25 W, and element 4 absorbs 15 W. How much power is supplied by element 5?

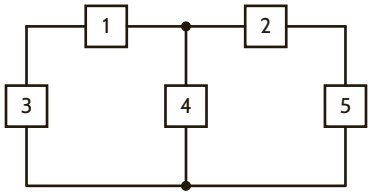

Figure P1.46

Chapter Two

THE LEARNING GOALS FOR THIS CHAPTER ARE THAT STUDENTS SHOULD BE ABLE TO:

- Use Ohm's law to calculate the voltages and currents in electric circuits.
- Apply Kirchhoff's current law and Kirchhoff's voltage law to determine the voltages and currents in an electric circuit.
- Analyze single-loop and single-node-pair circuits to calculate the voltages and currents in an electric circuit.
- Determine the equivalent resistance of a resistor network where the resistors are in series and parallel.
- Calculate the voltages and currents in a simple electric circuit using voltage and current division.
- Transform the basic wye resistor network to a delta resistor network, and visa versa.
- Analyze electric circuits to determine the voltages and currents in electric circuits that contain dependent sources.

RESISTIVE CIRCUITS

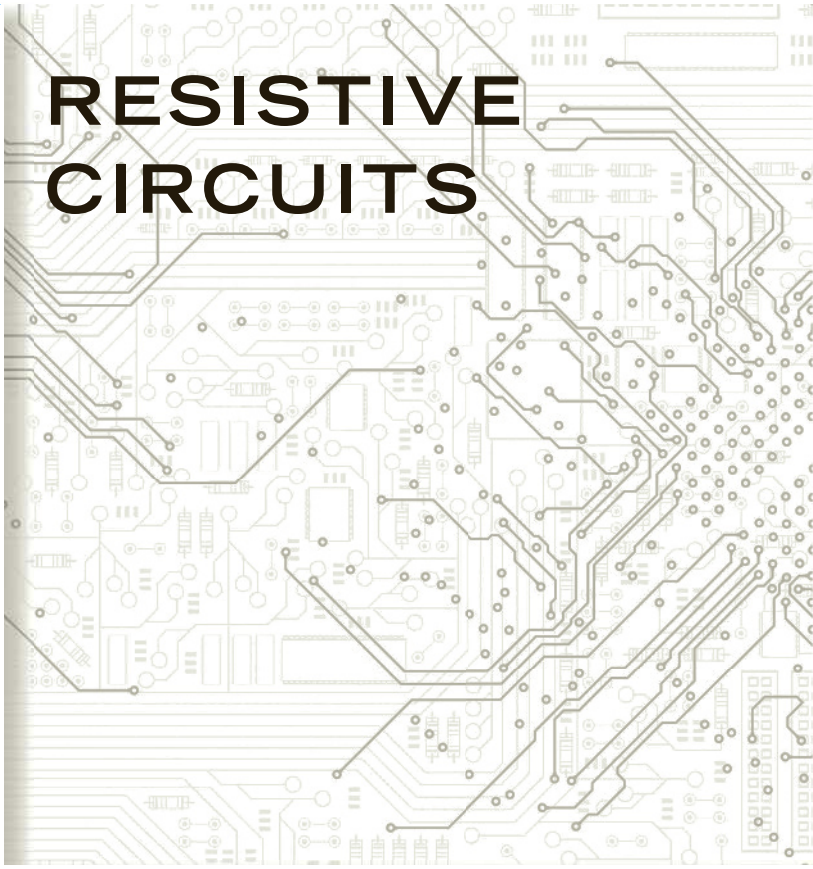

EXPERIMENTS THAT HELP STUDENTS DEVELOP AN UNDERSTANDING OF THE ANALYSIS OF RESISTIVE CIRCUITS ARE:

- Ohm's Law: Verify Ohm's law by measuring the current through and the voltage across a resistor.
- Series and Parallel Resistors: Find the equivalent resistance of resistors connected in parallel and in series by calculating the equivalent resistance between two nodes using the measured current flowing between and the voltage between the nodes.
- Voltage and Current Dividers: Compare the voltages and currents in divider networks that are found analytically to the values obtained from PSpice simulations and from voltage and current measurements.
- Wye-Delta Transformations: Demonstrate the equivalence of certain delta and wye networks through simulations and measurements.

2.1 Ohm's Law

Ohm's law is named for the German physicist Georg Simon Ohm, who is credited with establishing the voltage–current relationship for resistance. As a result of his pioneering work, the unit of resistance bears his name.

Ohm's law states that the voltage across a resistance is directly proportional to the current flowing through it. The resistance, measured in ohms, is the constant of proportionality between the voltage and current.

A circuit element whose electrical characteristic is primarily resistive is called a resistor and is represented by the symbol shown in **Fig. 2.1a**. A resistor is a physical device that can be purchased in certain standard values in an electronic parts store. These resistors, which find use in a variety of electrical applications, are normally carbon composition or wirewound. In addition, resistors can be fabricated using thick oxide or thin metal films for use in hybrid circuits, or they can be diffused in semiconductor integrated circuits. Some typical discrete resistors are shown in **Fig. 2.1b**.

HINT
The passive sign convention will be employed in conjunction with Ohm's law.

The mathematical relationship of Ohm's law is illustrated by the equation

$$v(t) = R\, i(t), \text{ where } R \geqq 0 \qquad \textbf{2.1}$$

or, equivalently, by the voltage–current characteristic shown in **Fig. 2.2a**. Note carefully the relationship between the polarity of the voltage and the direction of the current. In addition, note that we have tacitly assumed that the resistor has a constant value and therefore that the voltage–current characteristic is linear.

The symbol Ω is used to represent ohms, and therefore,

$$1\ \Omega = 1\ \text{V/A}$$

Although in our analysis we will always assume that the resistors are *linear* and are thus described by a straight-line characteristic that passes through the origin, it is important that readers realize that some very useful and practical elements do exist that exhibit a *nonlinear* resistance characteristic; that is, the voltage–current relationship is not a straight line.

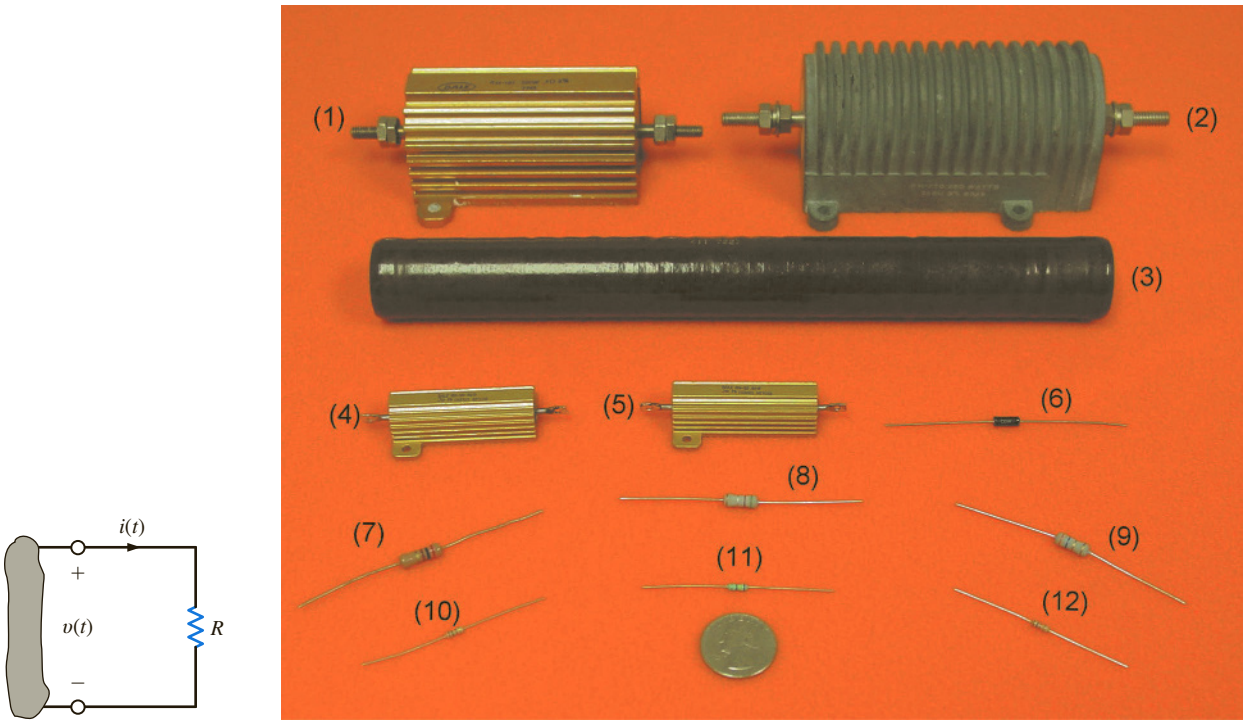

Figure 2.1

(a) Symbol for a resistor; (b) some practical devices. (1), (2), and (3) are high-power resistors. (4) and (5) are high-wattage fixed resistors. (6) is a high-precision resistor. (7)–(12) are fixed resistors with different power ratings. (Photo courtesy of Mark Nelms and Jo Ann Loden)

Figure 2.2

Graphical representation of the voltage–current relationship for (a) a linear resistor and (b) a light bulb.

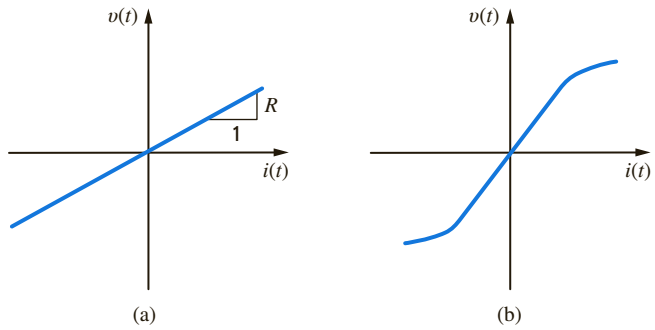

The light bulb from the flashlight in Chapter 1 is an example of an element that exhibits a nonlinear characteristic. A typical characteristic for a light bulb is shown in **Fig. 2.2b**.

Since a resistor is a passive element, the proper current–voltage relationship is illustrated in Fig. 2.1a. The power supplied to the terminals is absorbed by the resistor. Note that the charge moves from the higher to the lower potential as it passes through the resistor and the energy absorbed is dissipated by the resistor in the form of heat. As indicated in Chapter 1, the rate of energy dissipation is the instantaneous power, and therefore

$$p(t) = v(t)i(t) \tag{2.2}$$

which, using Eq. (2.1), can be written as

$$p(t) = Ri^2(t) = \frac{v^2(t)}{R} \tag{2.3}$$

This equation illustrates that the power is a nonlinear function of either current or voltage and that it is always a positive quantity.

Conductance, represented by the symbol G, is another quantity with wide application in circuit analysis. By definition, conductance is the reciprocal of resistance; that is,

$$G = \frac{1}{R} \tag{2.4}$$

The unit of conductance is the siemens, and the relationship between units is

$$1\ \text{S} = 1\ \text{A/V}$$

Using Eq. (2.4), we can write two additional expressions,

$$i(t) = Gv(t) \tag{2.5}$$

and

$$p(t) = \frac{i^2(t)}{G} = Gv^2(t) \tag{2.6}$$

Eq. (2.5) is another expression of Ohm's law.

Two specific values of resistance, and therefore conductance, are very important: $R = 0$ and $R = \infty$.

In examining the two cases, consider the network in **Fig. 2.3a**. The variable resistance symbol is used to describe a resistor such as the volume control on a radio or television set. As the resistance is decreased and becomes smaller and smaller, we finally reach a point where the resistance is zero and the circuit is reduced to that shown in **Fig. 2.3b**; that is, the

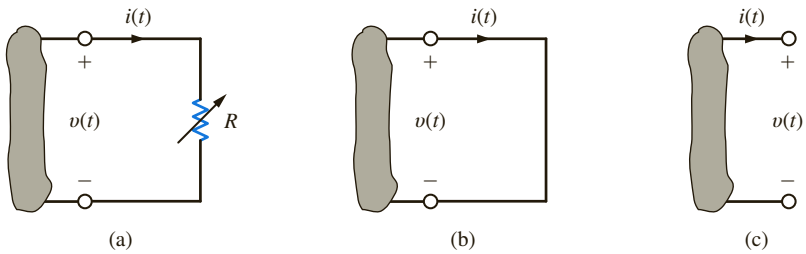

Figure 2.3
Short-circuit and open-circuit descriptions.

resistance can be replaced by a short circuit. On the other hand, if the resistance is increased and becomes larger and larger, we finally reach a point where it is essentially infinite and the resistance can be replaced by an open circuit, as shown in **Fig. 2.3c**. Note that in the case of a short circuit where $R = 0$,

$$\begin{aligned} v(t) &= Ri(t) \\ &= 0 \end{aligned}$$

Therefore, $v(t) = 0$, although the current could theoretically be any value. In the open-circuit case where $R = \infty$,

$$\begin{aligned} i(t) &= v(t)/R \\ &= 0 \end{aligned}$$

Therefore, the current is zero regardless of the value of the voltage across the open terminals.

EXAMPLE 2.1

In the circuit in **Fig. 2.4a**, determine the current and the power absorbed by the resistor.

SOLUTION

Using Eq. (2.1), we find the current to be

$$I = V/R = 12/2\text{k} = 6 \text{ mA}$$

Note that because many of the resistors employed in our analysis are in kΩ, we will use k in the equations in place of 1000. The power absorbed by the resistor is given by Eq. (2.2) or (2.3) as

$$\begin{aligned} P &= VI = (12)(6 \times 10^{-3}) = 0.072 \text{ W} \\ &= I^2R = (6 \times 10^{-3})^2(2\text{k}) = 0.072 \text{ W} \\ &= V^2/R = (12)^2/2\text{k} = 0.072 \text{ W} \end{aligned}$$

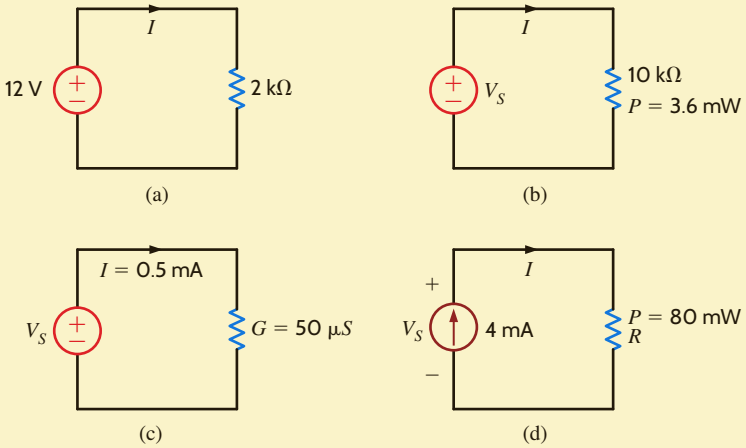

Figure 2.4
Circuits for Examples 2.1 to 2.4.

EXAMPLE 2.2

The power absorbed by the 10-kΩ resistor in Fig. 2.4b is 3.6 mW. Determine the voltage and the current in the circuit.

SOLUTION

Using the power relationship, we can determine either of the unknowns:

$$V_S^2/R = P$$
$$V_S^2 = (3.6 \times 10^{-3})(10\text{k})$$
$$V_S = 6\text{ V}$$

and

$$I^2R = P$$
$$I^2 = (3.6 \times 10^{-3})/10\text{k}$$
$$I = 0.6\text{ mA}$$

Furthermore, once V_S is determined, I could be obtained by Ohm's law, and likewise once I is known, then Ohm's law could be used to derive the value of V_S. Note carefully that the equations for power involve the terms I^2 and V_S^2. Therefore, $I = -0.6$ mA and $V_S = -6$ V also satisfy the mathematical equations and, in this case, the direction of *both* the voltage and current is reversed.

EXAMPLE 2.3

Given the circuit in Fig. 2.4c, we wish to find the value of the voltage source and the power absorbed by the resistance.

SOLUTION

The voltage is

$$V_S = I/G = (0.5 \times 10^{-3})/(50 \times 10^{-6}) = 10\text{ V}$$

The power absorbed is then

$$P = I^2/\text{G} = (0.5 \times 10^{-3})^2/(50 \times 10^{-6}) = 5\text{ mW}$$

Or we could simply note that

$$R = 1/G = 20\text{ k}\Omega$$

and therefore

$$V_S = IR = (0.5 \times 10^{-3})(20\text{k}) = 10\text{ V}$$

and the power could be determined using $P = I^2R = V_S^2/R = V_SI$.

EXAMPLE 2.4

Given the network in Fig. 2.4d, we wish to find R and V_S.

SOLUTION

Using the power relationship, we find that

$$R = P/I^2 = (80 \times 10^{-3})/(4 \times 10^{-3})^2 = 5\text{ k}\Omega$$

The voltage can now be derived using Ohm's law as

$$V_S = IR = (4 \times 10^{-3})(5\text{k}) = 20\text{ V}$$

The voltage could also be obtained from the remaining power relationships in Eqs. (2.2) and (2.3).

Before leaving this initial discussion of circuits containing sources and a single resistor, it is important to note a phenomenon that we will find to be true in circuits containing many sources and resistors. The presence of a voltage source between a pair of terminals tells us precisely what the voltage is between the two terminals regardless of what is happening in the balance of the network. What we do not know is the current in the voltage source. We must apply circuit analysis to the entire network to determine this current. Likewise, the presence of a current source connected between two terminals specifies the exact value of the current through the source between the terminals. What we do not know is the value of the voltage across the current source. This value must be calculated by applying circuit analysis to the entire network. Furthermore, it is worth emphasizing that when applying Ohm's law, the relationship $V = IR$ specifies a relationship between the voltage *directly across* a resistor R and the current that is *present* in this resistor. Ohm's law does not apply when the voltage is present in one part of the network and the current exists in another. This is a common mistake made by students who try to apply $V = IR$ to a resistor R in the middle of the network while using a V at some other location in the network.

LEARNING ASSESSMENTS

E2.1 Given the circuits in Fig. E2.1, find (a) the current I and the power absorbed by the resistor in Fig. E2.1a, and (b) the voltage across the current source and the power supplied by the source in Fig. E2.1b.

ANSWER:
(a) $I = 0.3$ mA,
$P = 3.6$ mW;
(b) $V_S = 3.6$ V,
$P = 2.16$ mW.

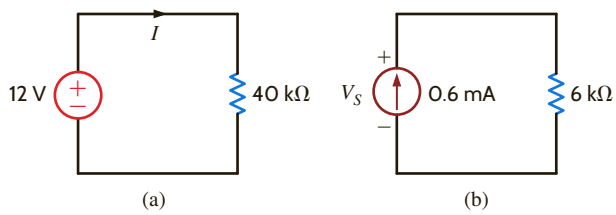

Figure E2.1

E2.2 Given the circuits in Fig. E2.2, find (a) R and V_S in the circuit in Fig. E2.2a, and (b) find I and R in the circuit in Fig. E2.2b.

ANSWER:
(a) $R = 10$ kΩ, $V_S = 4$ V;
(b) $I = 20.8$ mA, $R = 576$ Ω.

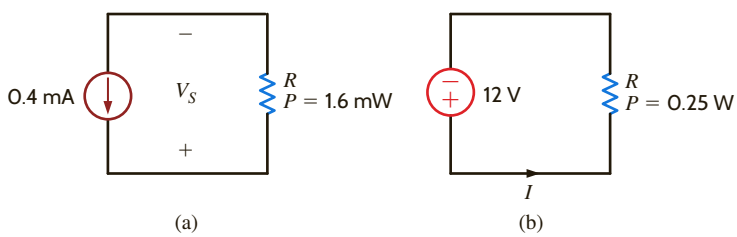

Figure E2.2

E2.3 The power absorbed by G_x in Fig. E2.3 is 50 mW. Find G_x.

ANSWER:
$G_x = 500$ μS.

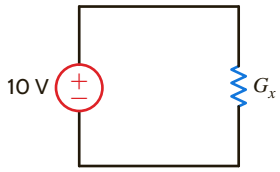

Figure E2.3

2.2 Kirchhoff's Laws

The circuits we have considered previously have all contained a single resistor, and we have analyzed them using Ohm's law. At this point we begin to expand our capabilities to handle more complicated networks that result from an interconnection of two or more of these simple elements. We will assume that the interconnection is performed by electrical conductors (wires) that have zero resistance—that is, perfect conductors. Because the wires have zero resistance, the energy in the circuit is in essence lumped in each element, and we employ the term *lumped-parameter circuit* to describe the network.

To aid us in our discussion, we will define a number of terms that will be employed throughout our analysis. As will be our approach throughout this text, we will use examples to illustrate the concepts and define the appropriate terms. For example, the circuit shown in **Fig. 2.5a** will be used to describe the terms *node, loop,* and *branch*. A node is simply a point of connection of two or more circuit elements. The reader is cautioned to note that, although one node can be spread out with perfect conductors, it is still only one node. This is illustrated in **Fig. 2.5b**, where the circuit has been redrawn. Node 5 consists of the entire bottom connector of the circuit.

If we start at some point in the circuit and move along perfect conductors in any direction until we encounter a circuit element, the total path we cover represents a single node. Therefore, we can assume that a node is one end of a circuit element together with all the perfect conductors that are attached to it. Examining the circuit, we note that there are numerous paths through it. A *loop* is simply any *closed path* through the circuit in which no node is encountered more than once. For example, starting from node 1, one loop would contain the elements R_1, v_2, R_4, and i_1; another loop would contain R_2, v_1, v_2, R_4, and i_1; and so on. However, the path R_1, v_1, R_5, v_2, R_3, and i_1 is not a loop because we have encountered node 3 twice. Finally, a *branch* is a portion of a circuit containing only a single element and the nodes at each end of the element. The circuit in Fig. 2.5 contains eight branches.

HINT
KCL is an extremely important and useful law.

Given the previous definitions, we are now in a position to consider Kirchhoff's laws, named after German scientist Gustav Robert Kirchhoff. These two laws are quite simple but extremely important. We will not attempt to prove them because the proofs are beyond our current level of understanding. However, we will demonstrate their usefulness and attempt to make the reader proficient in their use. The first law is *Kirchhoff's current law* (KCL), which states that *the algebraic sum of the currents entering any node is zero.* In mathematical form the law appears as

$$\sum_{j=1}^{N} i_j(t) = 0 \qquad \textbf{2.7}$$

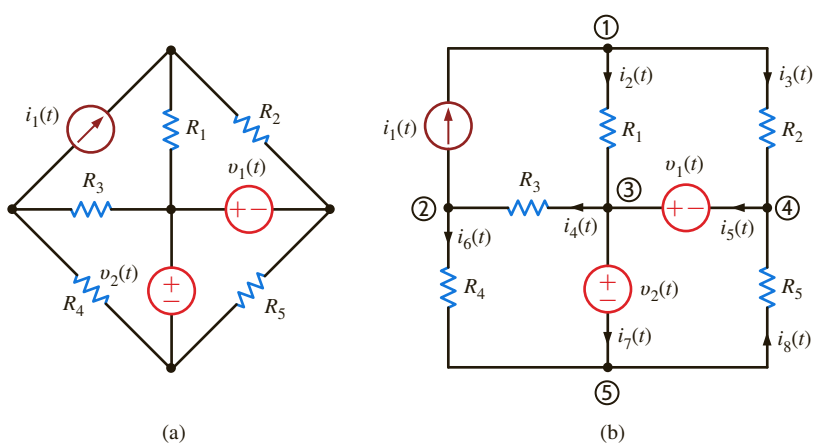

Figure 2.5
Circuit used to illustrate KCL.

where $i_j(t)$ is the jth current entering the node through branch j and N is the number of branches connected to the node. To understand the use of this law, consider node 3 shown in Fig. 2.5. Applying Kirchhoff's current law to this node yields

$$i_2(t) - i_4(t) + i_5(t) - i_7(t) = 0$$

We have assumed that the algebraic signs of the currents entering the node are positive and, therefore, that the signs of the currents leaving the node are negative.

If we multiply the foregoing equation by -1, we obtain the expression

$$-i_2(t) + i_4(t) - i_5(t) + i_7(t) = 0$$

which simply states that *the algebraic sum of the currents leaving a node is zero*. Alternatively, we can write the equation as

$$i_2(t) + i_5(t) = i_4(t) + i_7(t)$$

which states that *the sum of the currents entering a node is equal to the sum of the currents leaving the node*. Both of these italicized expressions are alternative forms of Kirchhoff's current law.

Once again it must be emphasized that the latter statement means that the sum of the *variables* that have been defined entering the node is equal to the sum of the *variables* that have been defined leaving the node, not the actual currents. For example, $i_j(t)$ may be defined entering the node, but if its actual value is negative, there will be positive charge leaving the node.

Note carefully that Kirchhoff's current law states that the *algebraic* sum of the currents either entering or leaving a node must be zero. We now begin to see why we stated in Chapter 1 that it is critically important to specify both the magnitude and the direction of a current. Recall that current is charge in motion. Based on our background in physics, charges cannot be stored at a node. In other words, if we have a number of charges entering a node, then an equal number must be leaving that same node. Kirchhoff's current law is based on this principle of conservation of charge.

Finally, it is possible to generalize Kirchhoff's current law to include a closed surface. By a closed surface we mean some set of elements completely contained within the surface that are interconnected. Since the current entering each element within the surface is equal to that leaving the element (i.e., the element stores no net charge), it follows that the current entering an interconnection of elements is equal to that leaving the interconnection. Therefore, Kirchhoff's current law can also be stated as follows: *The algebraic sum of the currents entering any closed surface is zero.*

EXAMPLE 2.5

Let us write KCL for every node in the network in Fig. 2.5, assuming that the currents leaving the node are positive.

SOLUTION

The KCL equations for nodes 1 through 5 are

$$\begin{aligned}
-i_1(t) + i_2(t) + i_3(t) &= 0\\
i_1(t) - i_4(t) + i_6(t) &= 0\\
-i_2(t) + i_4(t) - i_5(t) + i_7(t) &= 0\\
-i_3(t) + i_5(t) - i_8(t) &= 0\\
-i_6(t) - i_7(t) + i_8(t) &= 0
\end{aligned}$$

Note carefully that if we add the first four equations, we obtain the fifth equation. What does this tell us? Recall that this means that this set of equations is not linearly independent. We can show that the first four equations are, however, linearly independent. Store this idea in memory because it will become very important when we learn how to write the equations necessary to solve for all the currents and voltages in a network in the following chapter.

EXAMPLE 2.6

The network in Fig. 2.5 is represented by the topological diagram shown in Fig. 2.6. We wish to find the unknown currents in the network.

Figure 2.6

Topological diagram for the circuit in Fig. 2.5.

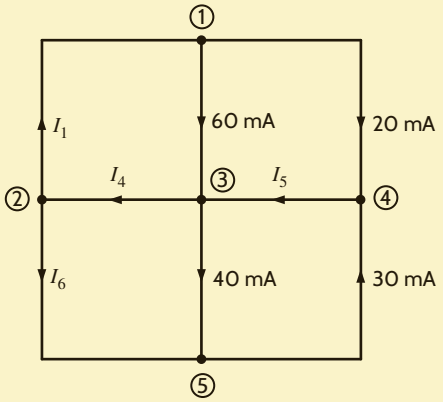

SOLUTION

Assuming the currents leaving the node are positive, the KCL equations for nodes 1 through 4 are

$$-I_1 + 0.06 + 0.02 = 0$$
$$I_1 - I_4 + I_6 = 0$$
$$-0.06 + I_4 - I_5 + 0.04 = 0$$
$$-0.02 + I_5 - 0.03 = 0$$

The first equation yields I_1 and the last equation yields I_5. Knowing I_5, we can immediately obtain I_4 from the third equation. Then the values of I_1 and I_4 yield the value of I_6 from the second equation. The results are $I_1 = 80$ mA, $I_4 = 70$ mA, $I_5 = 50$ mA, and $I_6 = -10$ mA.

As indicated earlier, dependent or controlled sources are very important because we encounter them when analyzing circuits containing active elements such as transistors. The following example presents a circuit containing a current-controlled current source.

EXAMPLE 2.7

Let us write the KCL equations for the circuit shown in Fig. 2.7.

Figure 2.7

Circuit containing a dependent current source.

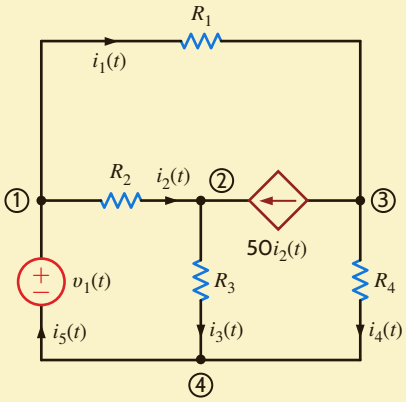

SOLUTION

The KCL equations for nodes 1 through 4 follow:

$$\begin{aligned} i_1(t) + i_2(t) - i_5(t) &= 0 \\ -i_2(t) + i_3(t) - 50i_2(t) &= 0 \\ -i_1(t) + 50i_2(t) + i_4(t) &= 0 \\ i_5(t) - i_3(t) - i_4(t) &= 0 \end{aligned}$$

If we added the first three equations, we would obtain the negative of the fourth. What does this tell us about the set of equations?

Kirchhoff's second law, called *Kirchhoff's voltage law* (KVL), states that the *algebraic sum of the voltages around any loop is zero*. As was the case with Kirchhoff's current law, we will defer the proof of this law and concentrate on understanding how to apply it. Once again the reader is cautioned to remember that we are dealing only with lumped-parameter circuits. These circuits are conservative, meaning that the work required to move a unit charge around any loop is zero.

In Chapter 1, we related voltage to the difference in energy levels within a circuit and talked about the energy conversion process in a flashlight. Because of this relationship between voltage and energy, Kirchhoff's voltage law is based on the conservation of energy.

Recall that in Kirchhoff's current law, the algebraic sign was required to keep track of whether the currents were entering or leaving a node. In Kirchhoff's voltage law, the algebraic sign is used to keep track of the voltage polarity. In other words, as we traverse the circuit, it is necessary to sum to zero the increases and decreases in energy level. Therefore, it is important we keep track of whether the energy level is increasing or decreasing as we go through each element.

EXAMPLE 2.8

Let us find I_4 and I_1 in the network represented by the topological diagram in Fig. 2.6.

SOLUTION

This diagram is redrawn in **Fig. 2.8**; node 1 is enclosed in surface 1, and nodes 3 and 4 are enclosed in surface 2. A quick review of the previous example indicates that we derived a value for I_4 from the value of I_5. However, I_5 is now completely enclosed in surface 2. If we apply KCL to surface 2, assuming the currents out of the surface are positive, we obtain

$$I_4 - 0.06 - 0.02 - 0.03 + 0.04 = 0$$

or

$$I_4 = 70 \text{ mA}$$

which we obtained without any knowledge of I_5. Likewise for surface 1, what goes in must come out and, therefore, $I_1 = 80$ mA. The reader is encouraged to cut the network in Fig. 2.6 into two pieces in any fashion and show that KCL is always satisfied at the boundaries.

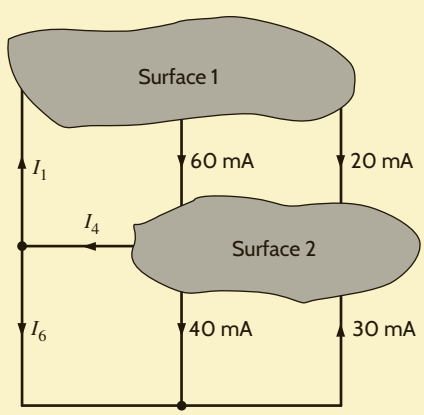

Figure 2.8
Diagram used to demonstrate KCL for a surface.

LEARNING ASSESSMENTS

E2.4 Given the networks in Fig. E2.3, find (a) I_1 in Fig. E2.4a and (b) I_T in Fig. E2.4b.

ANSWER:
(a) $I_1 = -50$ mA;
(b) $I_T = 70$ mA.

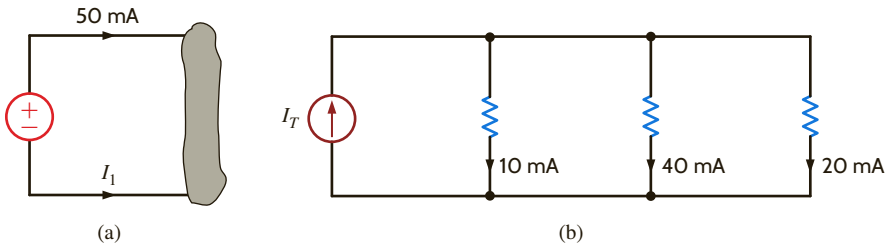

Figure E2.4

E2.5 Find (a) I_1 in the network in Fig. E2.5a and (b) I_1 and I_2 in the circuit in Fig. E2.5b.

ANSWER:
(a) $I_1 = 6$ mA;
(b) $I_1 = 8$ mA and $I_2 = 5$ mA.

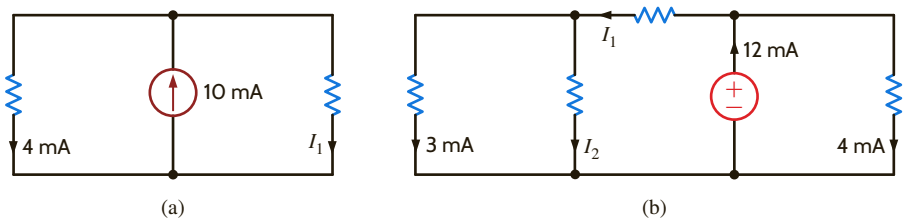

Figure E2.5

E2.6 Find the current i_x in the circuits in Fig. E2.6.

ANSWER:
(a) $i_x = 4$ mA;
(b) $i_x = 12$ mA.

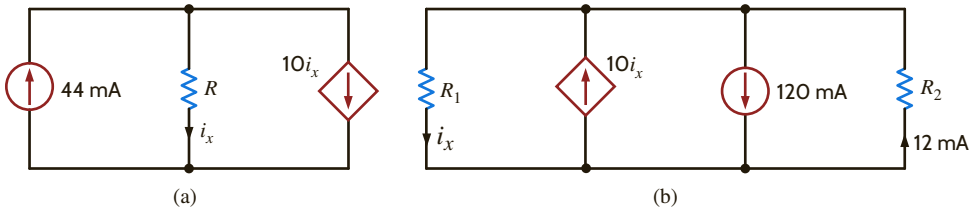

Figure E2.6

In applying KVL, we must traverse any loop in the circuit and sum to zero the increases and decreases in energy level. At this point, we have a decision to make. Do we want to consider a decrease in energy level as positive or negative? We will adopt a policy of considering a decrease in energy level as positive and an increase in energy level as negative. As we move around a loop, we encounter the plus sign first for a decrease in energy level and a negative sign first for an increase in energy level.

Finally, we employ the convention V_{ab} to indicate the voltage of point a with respect to point b: that is, the variable for the voltage between point a and point b, with point a considered positive relative to point b. Since the potential is measured between two points, it is convenient to use an arrow between the two points, with the head of the arrow located at the positive node. Note that the double-subscript notation, the + and − notation, and the single-headed arrow notation are all the same if the head of the arrow is pointing toward the

EXAMPLE 2.9

Consider the circuit shown in Fig. 2.9. If V_{R_1} and V_{R_2} are known quantities, let us find V_{R_3}.

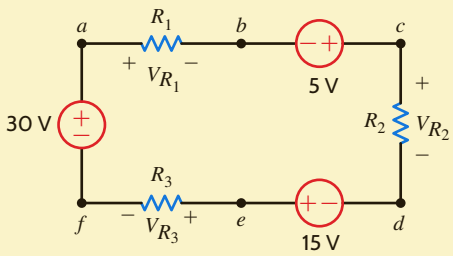

Figure 2.9
Circuit used to illustrate KVL.

SOLUTION

Starting at point a in the network and traversing it in a clockwise direction, we obtain the equation

$$+V_{R_1} - 5 + V_{R_2} - 15 + V_{R_3} - 30 = 0$$

which can be written as

$$\begin{aligned} +V_{R_1} + V_{R_2} + V_{R_3} &= 5 + 15 + 30 \\ &= 50 \end{aligned}$$

Now suppose that V_{R_1} and V_{R_2} are known to be 18 V and 12 V, respectively. Then $V_{R_3} = 20$ V.

EXAMPLE 2.10

Consider the network in Fig. 2.10.

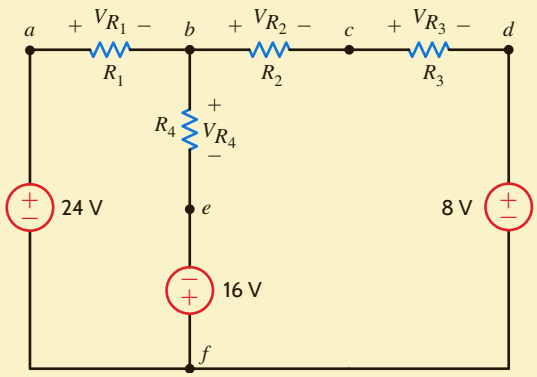

Figure 2.10
Circuit used to explain KVL.

Let us demonstrate that only two of the three possible loop equations are linearly independent.

SOLUTION

Note that this network has three closed paths: the left loop, right loop, and outer loop. Applying our policy for writing KVL equations and traversing the left loop starting at point a, we obtain

$$V_{R_1} + V_{R_4} - 16 - 24 = 0$$

The corresponding equation for the right loop starting at point b is

$$V_{R_2} + V_{R_3} + 8 + 16 - V_{R_4} = 0$$

The equation for the outer loop starting at point a is

$$V_{R_1} + V_{R_2} + V_{R_3} + 8 - 24 = 0$$

Note that if we add the first two equations, we obtain the third equation. Therefore, as we indicated in Example 2.5, the three equations are not linearly independent. Once again, we will address this issue in the next chapter and demonstrate that we need only the first two equations to solve for the voltages in the circuit.

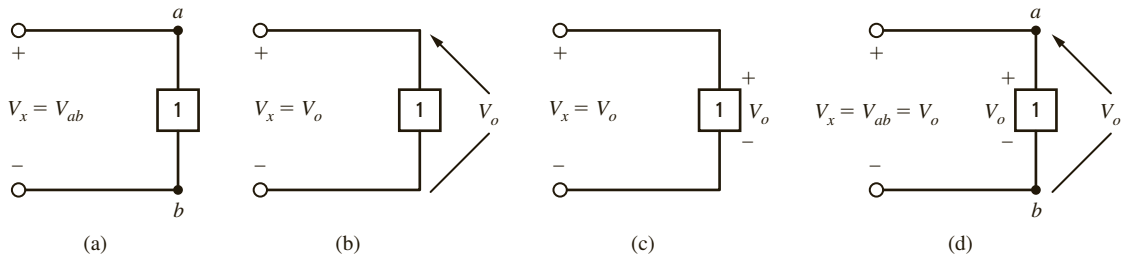

Figure 2.11

Equivalent forms for labeling voltage.

positive terminal and the first subscript in the double-subscript notation. All of these equivalent forms for labeling voltages are shown in **Fig. 2.11**. The usefulness of the arrow notation stems from the fact that we may want to label the voltage between two points that are far apart in a network. In this case, the other notations are often confusing.

EXAMPLE 2.11

Consider the network in **Fig. 2.12a**. Let us apply KVL to determine the voltage between two points. Specifically, in terms of the double-subscript notation, let us find V_{ae} and V_{ec}.

Figure 2.12

Network used in Example 2.11.

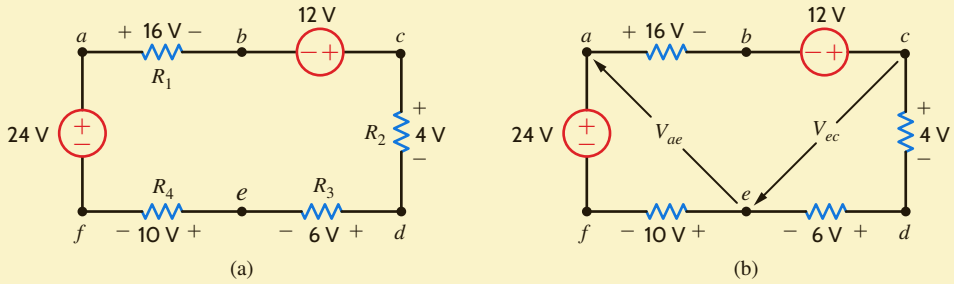

SOLUTION

The circuit is redrawn in **Fig. 2.12b**. Since points a and e as well as e and c are not physically close, the arrow notation is very useful. Our approach to determining the unknown voltage is to apply KVL with the unknown voltage in the closed path. Therefore, to determine V_{ae} we can use the path *aefa* or *abcdea*. The equations for the two paths in which V_{ae} is the only unknown are

$$V_{ae} + 10 - 24 = 0$$

and

$$16 - 12 + 4 + 6 - V_{ae} = 0$$

Note that both equations yield $V_{ae} = 14$ V. Even before calculating V_{ae}, we could calculate V_{ec} using the path *cdec* or *cefabc*. However, since V_{ae} is now known, we can also use the path *ceabc*. KVL for each of these paths is

$$4 + 6 + V_{ec} = 0$$

$$-V_{ec} + 10 - 24 + 16 - 12 = 0$$

and

$$-V_{ec} - V_a + 16 - 12 = 0$$

Each of these equations yields $V_{ec} = -10$ V.

In general, the mathematical representation of Kirchhoff's voltage law is

$$\sum_{j=1}^{N} v_j(t) = 0 \qquad \textbf{2.8}$$

where $v_j(t)$ is the voltage across the jth branch (with the proper reference direction) in a loop containing N voltages. This expression is analogous to Eq. (2.7) for Kirchhoff's current law.

HINT
KVL is an extremely important and useful law.

EXAMPLE 2.12

Given the network in Fig. 2.13 containing a dependent source, let us write the KVL equations for the two closed paths *abda* and *bcdb*.

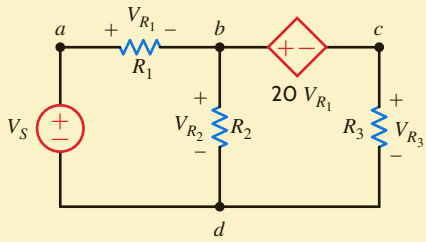

Figure 2.13
Network containing a dependent source.

SOLUTION

The two KVL equations are

$$V_{R_1} + V_{R_2} - V_S = 0$$
$$20V_{R_1} + V_{R_3} - V_{R_2} = 0$$

LEARNING ASSESSMENTS

E2.7 Find I_x and I_1 in Fig. E2.7.

ANSWER:
$I_x = 2$ mA;
$I_1 = 4$ mA.

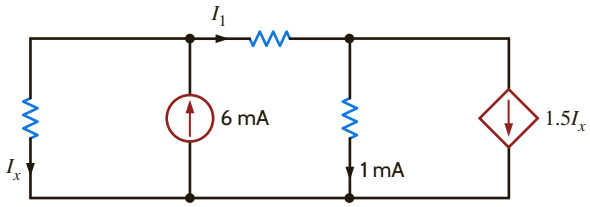

Figure E2.7

E2.8 Find V_{ad} and V_{eb} in the network in Fig. E2.8.

ANSWER:
$V_{ad} = 26$ V;
$V_{eb} = 10$ V.

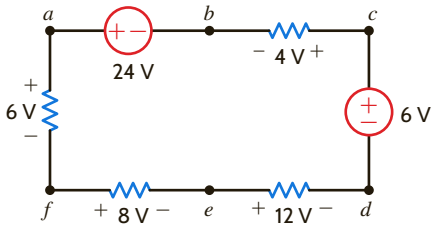

Figure E2.8

E2.9 Find V_{bd} in the circuit in Fig. E2.9.

ANSWER:
$V_{bd} = 11$ V.

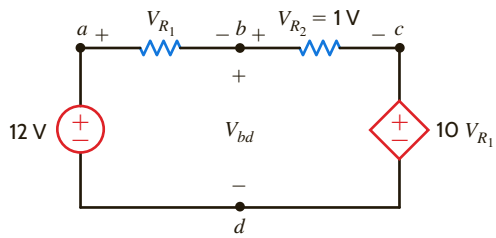

Figure E2.9

HINT
The subtleties associated with Ohm's law, as described here, are important and must be adhered to in order to ensure that the variables have the proper sign.

Before proceeding with the analysis of simple circuits, it is extremely important that we emphasize a subtle but very critical point. Ohm's law as defined by the equation $V = IR$ refers to the relationship between the voltage and current as defined in **Fig. 2.14a**. If the direction of either the current or the voltage, but not both, is reversed, the relationship between the current and the voltage would be $V = -IR$. In a similar manner, given the circuit in **Fig. 2.14b**, if the polarity of the voltage between the terminals A and B is specified as shown, then the direction of the current I is from point B through R to point A. Likewise, in **Fig. 2.14c**, if the direction of the current is specified as shown, then the polarity of the voltage must be such that point D is at a higher potential than point C and, therefore, the arrow representing the voltage V is from point C to point D.

Figure 2.14
Circuits used to explain Ohm's law.

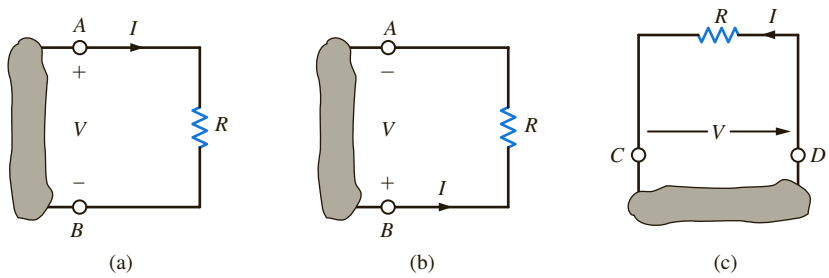

2.3 Single-Loop Circuits

VOLTAGE DIVISION At this point we can begin to apply the laws presented earlier to the analysis of simple circuits. To begin, we examine what is perhaps the simplest circuit—a single closed path, or loop, of elements.

Applying KCL to every node in a single-loop circuit reveals that the same current flows through all elements. We say that these elements are connected in series because they carry the same current. We will apply Kirchhoff's voltage law and Ohm's law to the circuit to determine various quantities in the circuit.

Our approach will be to begin with a simple circuit and then generalize the analysis to more complicated ones. The circuit shown in **Fig. 2.15** will serve as a basis for discussion. This circuit consists of an independent voltage source that is in series with two resistors. We have assumed that the current flows in a clockwise direction. If this assumption is correct, the solution of the equations that yields the current will produce a positive value. If the current is actually flowing in the opposite direction, the value of the current variable will simply be negative, indicating that the current is flowing in a direction opposite to that assumed. We have also made voltage polarity assignments for v_{R_1} and v_{R_2}. These assignments have been made using the convention employed in our discussion of Ohm's law and our choice for the direction of $i(t)$—that is, the convention shown in Fig. 2.14a.

Applying Kirchhoff's voltage law to this circuit yields

$$-v(t) + v_{R_1} + v_{R_2} = 0$$

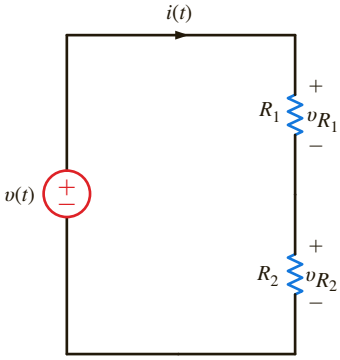

Figure 2.15
Single-loop circuit.

or

$$v(t) = v_{R_1} + v_{R_2}$$

However, from Ohm's law we know that

$$v_{R_1} = R_1 i(t)$$
$$v_{R_2} = R_2 i(t)$$

Therefore,

$$v(t) = R_1 i(t) + R_2 i(t)$$

Solving the equation for $i(t)$ yields

$$i(t) = \frac{v(t)}{R_1 + R_2} \qquad \textbf{2.9}$$

Knowing the current, we can now apply Ohm's law to determine the voltage across each resistor:

$$\begin{aligned} v_{R_1} &= R_1 i(t) \\ &= R_1\left[\frac{v(t)}{R_1 + R_2}\right] \qquad \textbf{2.10} \\ &= \frac{R_1}{R_1 + R_2} v(t) \end{aligned}$$

Similarly,

$$v_{R_2} = \frac{R_2}{R_1 + R_2} v(t) \qquad \textbf{2.11}$$

HINT
The manner in which voltage divides between two series resistors.

Though simple, Eqs. (2.10) and (2.11) are very important because they describe the operation of what is called a *voltage divider*. In other words, the source voltage $v(t)$ *is divided between the resistors* R_1 and R_2 *in direct proportion to their resistances*.

In essence, if we are interested in the voltage across the resistor R_1, we bypass the calculation of the current $i(t)$ and simply multiply the input voltage $v(t)$ by the ratio

$$\frac{R_1}{R_1 + R_2}$$

As illustrated in Eq. (2.10), we are using the current in the calculation, but not explicitly.

Note that the equations satisfy Kirchhoff's voltage law, since

$$-v(t) + \frac{R_1}{R_1 + R_2} v(t) + \frac{R_2}{R_1 + R_2} v(t) = 0$$

EXAMPLE 2.13

Consider the circuit shown in **Fig. 2.16**. The circuit is identical to Fig. 2.15 except that R_1 is a variable resistor such as the volume control for a radio or television set. Suppose that $V_S = 9$ V, $R_1 = 90$ kΩ, and $R_2 = 30$ kΩ.

Let us examine the change in both the voltage across R_2 and the power absorbed in this resistor as R_1 is changed from 90 kΩ to 15 kΩ.

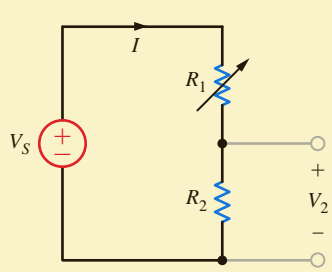

Figure 2.16
Voltage-divider circuit.

SOLUTION Since this is a voltage-divider circuit, the voltage V_2 can be obtained directly as

$$V_2 = \left[\frac{R_2}{R_1 + R_2}\right] V_S$$
$$= \left[\frac{30\text{k}}{90\text{k} + 30\text{k}}\right](9)$$
$$= 2.25 \text{ V}$$

Now suppose that the variable resistor is changed from 90 kΩ to 15 kΩ. Then

$$V_2 = \left[\frac{30\text{k}}{30\text{k} + 15\text{k}}\right](9)$$
$$= 6 \text{ V}$$

The direct voltage-divider calculation is equivalent to determining the current I and then using Ohm's law to find V_2. Note that the larger voltage is across the larger resistance. This voltage-divider concept and the simple circuit we have employed to describe it are very useful because, as will be shown later, more complicated circuits can be reduced to this form.

Finally, let us determine the instantaneous power absorbed by the resistor R_2 under the two conditions $R_1 = 90$ kΩ and $R_1 = 15$ kΩ. For the case $R_1 = 90$ kΩ, the power absorbed by R_2 is

$$P_2 = I^2 R_2 = \left(\frac{9}{120\text{k}}\right)^2 (30\text{k})$$
$$= 0.169 \text{ mW}$$

In the second case

$$P_2 = \left(\frac{9}{45\text{k}}\right)^2 (30\text{k})$$
$$= 1.2 \text{ mW}$$

The current in the first case is 75 μA, and in the second case it is 200 μA. Since the power absorbed is a function of the square of the current, the power absorbed in the two cases is quite different.

Let us now demonstrate the practical utility of this simple voltage-divider network.

EXAMPLE 2.14

Consider the circuit in Fig. 2.17a, which is an approximation of a high-voltage dc transmission facility. We have assumed that the bottom portion of the transmission line is a perfect conductor and will justify this assumption in the next chapter. The load can be represented by a resistor of value 183.5 Ω. Therefore, the equivalent circuit of this network is shown in Fig. 2.17b.

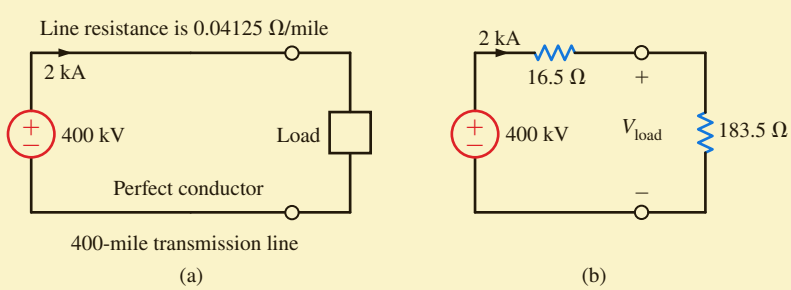

Figure 2.17
A high-voltage dc transmission facility.

Let us determine both the power delivered to the load and the power losses in the line.

SOLUTION

Using voltage division, the load voltage is

$$V_{\text{load}} = \left[\frac{183.5}{183.5 + 16.5}\right](400\text{k})$$
$$= 367 \text{ kV}$$

The input power is 800 MW and the power transmitted to the load is

$$P_{\text{load}} = I^2 R_{\text{load}}$$
$$= 734 \text{ MW}$$

Therefore, the power loss in the transmission line is

$$P_{\text{line}} = P_{\text{in}} - P_{\text{load}} = I^2 R_{\text{line}}$$
$$= 66 \text{ MW}$$

Since $P = VI$, suppose now that the utility company supplied power at 200 kV and 4 kA. What effect would this have on our transmission network? Without making a single calculation, we know that because power is proportional to the square of the current, there would be a large increase in the power loss in the line and, therefore, the efficiency of the facility would decrease substantially. That is why, in general, we transmit power at high voltage and low current.

MULTIPLE-SOURCE/RESISTOR NETWORKS At this point we wish to extend our analysis to include a multiplicity of voltage sources and resistors. For example, consider the circuit shown in **Fig. 2.18a**. Here we have assumed that the current flows in a clockwise direction, and we have defined the variable $i(t)$ accordingly. This may or may not be the case, depending on the value of the various voltage sources. Kirchhoff's voltage law for this circuit is

$$+v_{R_1} + v_2(t) - v_3(t) + v_{R_2} + v_4(t) + v_5(t) - v_1(t) = 0$$

or, using Ohm's law,

$$(R_1 + R_2)i(t) = v_1(t) - v_2(t) + v_3(t) - v_4(t) - v_5(t)$$

which can be written as

$$(R_1 + R_2)i(t) = v(t)$$

where

$$v(t) = v_1(t) + v_3(t) - [v_2(t) + v_4(t) + v_5(t)]$$

so that under the preceding definitions, Fig. 2.18a is equivalent to **Fig. 2.18b**. In other words, the sum of several voltage sources in series can be replaced by one source whose value is the algebraic sum of the individual sources. This analysis can, of course, be generalized to a circuit with N series sources.

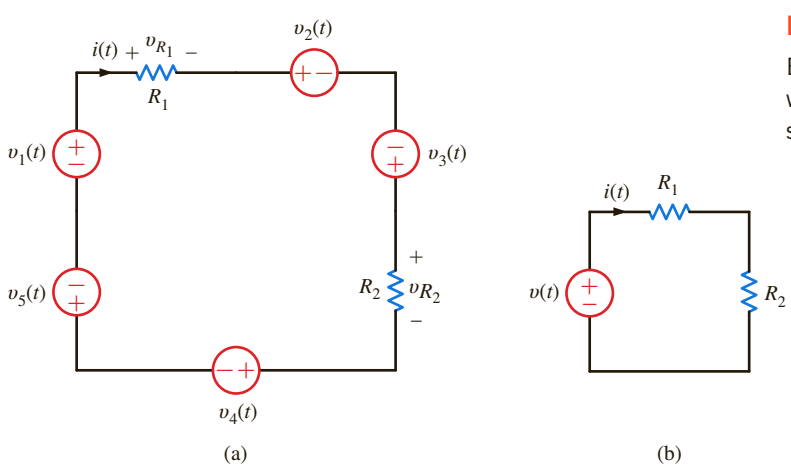

Figure 2.18
Equivalent circuits with multiple sources.

Figure 2.19
Equivalent circuits.

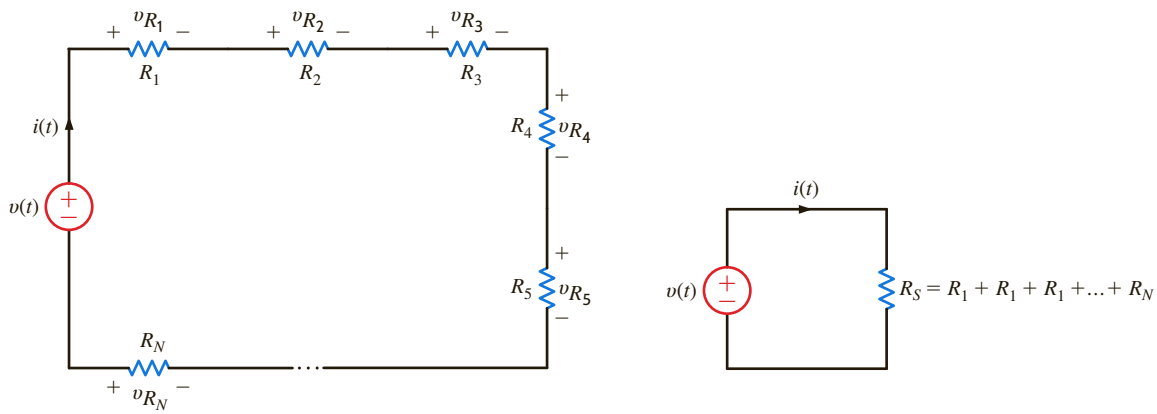

Now consider the circuit with N resistors in series, as shown in **Fig. 2.19a**. Applying Kirchhoff's voltage law to this circuit yields

$$\begin{aligned} v(t) &= v_{R_1} + v_{R_2} + \cdots + v_{R_N} \\ &= R_1 i(t) + R_2 i(t) + \cdots + R_N i(t) \end{aligned}$$

and therefore,

$$v(t) = R_S i(t) \tag{2.12}$$

where

$$R_S = R_1 + R_2 + \cdots + R_N \tag{2.13}$$

and hence,

$$i(t) = \frac{v(t)}{R_S} \tag{2.14}$$

Note also that for any resistor R_i in the circuit, the voltage across R_i is given by the expression

$$v_{R_i} = \frac{R_i}{R_S} v(t) \tag{2.15}$$

which is the voltage-division property for multiple resistors in series.

Equation (2.13) illustrates that *the equivalent resistance of N resistors in series is simply the sum of the individual resistances*. Thus, using Eq. (2.13), we can draw the circuit in **Fig. 2.19b** as an equivalent circuit for the one in Fig. 2.19a.

EXAMPLE 2.15

Given the circuit in **Fig. 2.20a**, let us find I, V_{bd}, and the power absorbed by the 30-kΩ resistor. Finally, let us use voltage division to find V_{bc}.

Figure 2.20
Circuit used in Example 2.15.

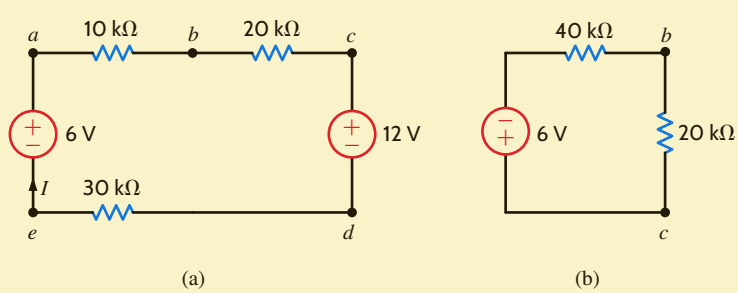

SOLUTION

KVL for the network yields the equation

$$10kI + 20kI + 12 + 30kI - 6 = 0$$
$$60kI = -6$$
$$I = -0.1 \text{ mA}$$

Therefore, the magnitude of the current is 0.1 mA, but its direction is opposite to that assumed.

The voltage V_{bd} can be calculated using either of the closed paths *abdea* or *bcdb*. The equations for both cases are

$$10kI + V_{bd} + 30k - 6 = 0$$

and

$$20kI + 12 - V_{bd} = 0$$

Using $I = -0.1$ mA in either equation yields $V_{bd} = 10$ V. Finally, the power absorbed by the 30-kΩ resistor is

$$P = I^2R = 0.3 \text{ mW}$$

Now from the standpoint of determining the voltage V_{bc}, we can simply add the sources since they are in series, add the remaining resistors since they are in series, and reduce the network to that shown in **Fig. 2.20b**. Then

$$V_{bc} = \frac{20k}{20k + 40k}(-6)$$
$$= -2 \text{ V}$$

EXAMPLE 2.16

A dc transmission facility is modeled by the approximate circuit shown in **Fig. 2.21**. If the load voltage is known to be $V_{load} = 458.3$ kV, we wish to find the voltage at the sending end of the line and the power loss in the line.

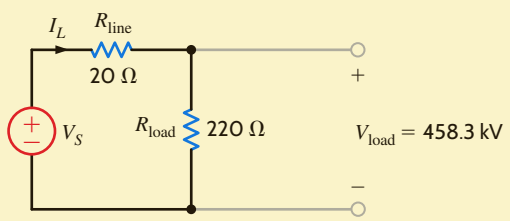

Figure 2.21
Circuit used in Example 2.16.

SOLUTION

Knowing the load voltage and load resistance, we can obtain the line current using Ohm's law:

$$I_L = 458.3k/220$$
$$= 2.083 \text{ kA}$$

The voltage drop across the line is

$$V_{line} = (I_L)(R_{line})$$
$$= 41.66 \text{ kV}$$

Now, using KVL,

$$V_S = V_{line} + V_{load}$$
$$= 500 \text{ kV}$$

Note that since the network is simply a voltage-divider circuit, we could obtain V_S immediately from our knowledge of R_{line}, R_{load}, and V_{load}. That is,

$$V_{\text{load}} = \left[\frac{R_{\text{load}}}{R_{\text{load}} + V_{\text{line}}}\right] V_S$$

and V_S is the only unknown in this equation.

The power absorbed by the line is

$$\begin{aligned} P_{\text{line}} &= I_L^2 R_{\text{line}} \\ &= 86.79 \text{ MW} \end{aligned}$$

PROBLEM-SOLVING STRATEGY

SINGLE-LOOP CIRCUITS

STEP 1. Define a current $i(t)$. We know from KCL that there is only one current for a single-loop circuit. This current is assumed to be flowing either clockwise or counterclockwise around the loop.

STEP 2. Using Ohm's law, define a voltage across each resistor in terms of the defined current.

STEP 3. Apply KVL to the single-loop circuit.

STEP 4. Solve the single KVL equation for the current $i(t)$. If $i(t)$ is positive, the current is flowing in the direction assumed; if not, then the current is actually flowing in the opposite direction.

LEARNING ASSESSMENTS

E2.10 Find I and V_{bd} in the circuit in Fig. E2.10.

ANSWER:
$I = -0.05$ mA;
$V_{bd} = 10$ V.

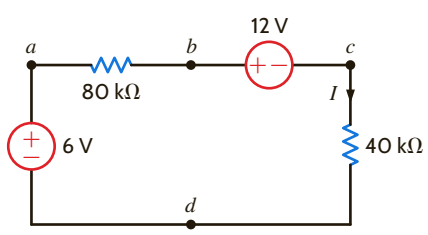

Figure E2.10

E2.11 In the network in Fig. E2.11, if V_{ad} is 3 V, find V_S.

ANSWER:
$V_S = 9$ V.

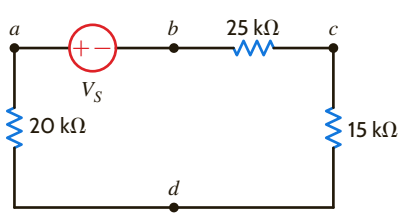

Figure E2.11

2.4 Single-Node-Pair Circuits

CURRENT DIVISION An important circuit is the single-node-pair circuit. If we apply KVL to every loop in a single-node-pair circuit, we discover that all of the elements have the same voltage across them and, therefore, are said to be connected in parallel. We will, however, apply Kirchhoff's current law and Ohm's law to determine various unknown quantities in the circuit.

Following our approach with the single-loop circuit, we will begin with the simplest case and then generalize our analysis. Consider the circuit shown in **Fig. 2.22**. Here we have an independent current source in parallel with two resistors.

Since all of the circuit elements are in parallel, the voltage $v(t)$ appears across each of them. Furthermore, an examination of the circuit indicates that the current $i(t)$ is into the upper node of the circuit and the currents $i_1(t)$ and $i_2(t)$ are out of the node. Since KCL essentially states that what goes in must come out, the question we must answer is how $i_1(t)$ and $i_2(t)$ divide the input current $i(t)$.

Applying Kirchhoff's current law to the upper node, we obtain

$$i(t) = i_1(t) + i_2(t)$$

and, employing Ohm's law, we have

$$\begin{aligned} i(t) &= \frac{v(t)}{R_1} + \frac{v(t)}{R_2} \\ &= \left(\frac{1}{R_1} + \frac{1}{R_2}\right) v(t) \\ &= \frac{v(t)}{R_p} \end{aligned}$$

where

$$\frac{1}{R_p} = \frac{1}{R_1} + \frac{1}{R_2} \qquad \textbf{2.16}$$

HINT
The parallel resistance equation.

$$R_p = \frac{R_1 R_2}{R_1 + R_2} \qquad \textbf{2.17}$$

Therefore, the equivalent resistance of two resistors connected in parallel is equal to the product of their resistances divided by their sum. Note also that this equivalent resistance R_p is always less than either R_1 or R_2. Hence, by connecting resistors in parallel we reduce the overall resistance. In the special case when $R_1 = R_2$, the equivalent resistance is equal to half of the value of the individual resistors.

The manner in which the current $i(t)$ from the source divides between the two branches is called *current division* and can be found from the preceding expressions. For example,

$$\begin{aligned} v(t) &= R_p i(t) \\ &= \frac{R_1 R_2}{R_1 + R_2} i(t) \end{aligned} \qquad \textbf{2.18}$$

and

$$i_1(t) = \frac{v(t)}{R_1}$$

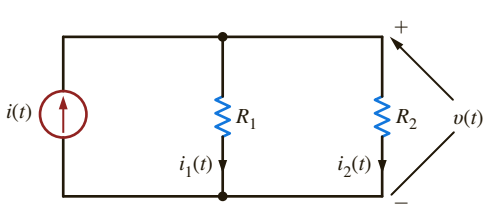

Figure 2.22
Simple parallel circuit.

HINT

The manner in which current divides between two parallel resistors.

$$i_1(t) = \frac{R_2}{R_1 + R_2} i(t) \tag{2.19}$$

and

$$i_2(t) = \frac{v(t)}{R_2}$$

$$= \frac{R_1}{R_1 + R_2} i(t) \tag{2.20}$$

Eqs. (2.19) and (2.20) are mathematical statements of the current-division rule.

EXAMPLE 2.17

Given the network in Fig. 2.23a, let us find I_1, I_2, and V_o.

SOLUTION

First, it is important to recognize that the current source feeds two parallel paths. To emphasize this point, the circuit is redrawn as shown in Fig. 2.23b. Applying current division, we obtain

$$I_1 = \left[\frac{40\text{k} + 80\text{k}}{60\text{k} + (40\text{k} + 80\text{k})}\right](0.9 \times 10^{-3})$$
$$= 0.6 \text{ mA}$$

and

$$I_2 = \left[\frac{60\text{k}}{60\text{k} + (40\text{k} + 80\text{k})}\right](0.9 \times 10^{-3})$$
$$= 0.3 \text{ mA}$$

Note that the larger current flows through the smaller resistor, and vice versa. In addition, note that if the resistances of the two paths are equal, the current will divide equally between them. KCL is satisfied since $I_1 + I_2 = 0.9$ mA.

The voltage V_o can be derived using Ohm's law as

$$V_o = 80\text{k}I_2$$
$$= 24 \text{ V}$$

The problem can also be approached in the following manner. The total resistance seen by the current source is 40 kΩ; that is, 60 kΩ in parallel with the series combination of 40 kΩ and 80 kΩ, as shown in Fig. 2.23c. The voltage across the current source is then

$$V_1 = (0.9 \times 10^{-3})40\text{k}$$
$$= 36 \text{ V}$$

Now that V_1 is known, we can apply voltage division to find V_o:

$$V_o = \left(\frac{80\text{k}}{80\text{k} + 40\text{k}}\right)V_1$$
$$= \left(\frac{80\text{k}}{120\text{k}}\right)36$$
$$= 24 \text{ V}$$

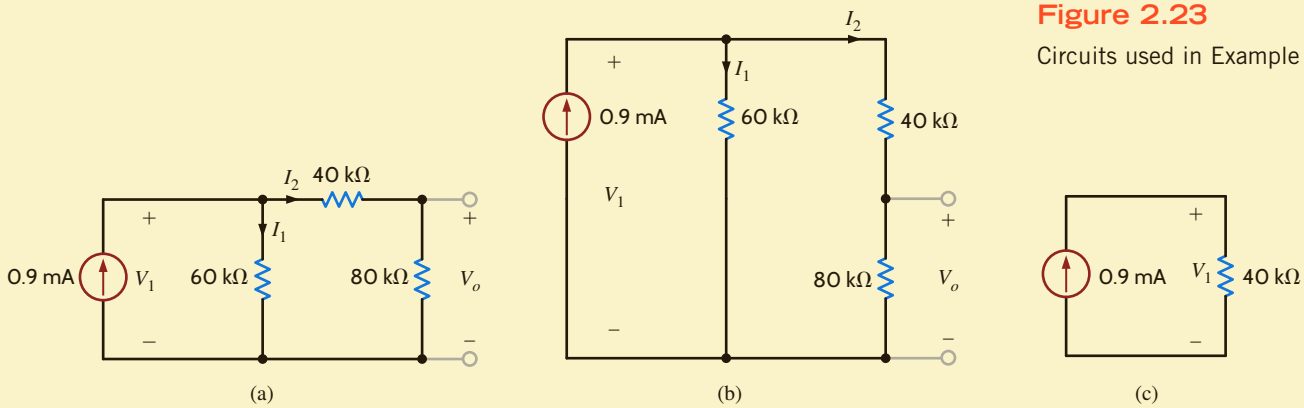

Figure 2.23
Circuits used in Example 2.17.

EXAMPLE 2.18

A typical car stereo consists of a 2-W audio amplifier and two speakers represented by the diagram shown in **Fig. 2.24a**. The output circuit of the audio amplifier is in essence a 430-mA current source, and each speaker has a resistance of 4 Ω. Let us determine the power absorbed by the speakers.

SOLUTION

The audio system can be modeled as shown in **Fig. 2.24b**. Since the speakers are both 4-Ω devices, the current will split evenly between them, and the power absorbed by each speaker is

$$\begin{aligned} P &= I^2R \\ &= (215 \times 10^{-3})^2(4) \\ &= 184.9 \text{ mW} \end{aligned}$$

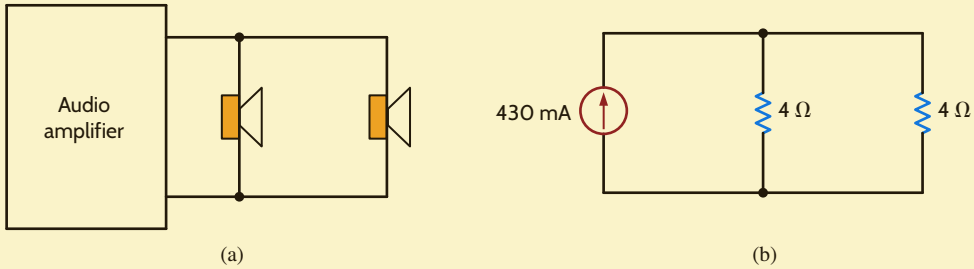

Figure 2.24
Circuits used in Example 2.18.

LEARNING ASSESSMENT

E2.12 Find the currents I_1 and I_2 and the power absorbed by the 40-kΩ resistor in the network in Fig. E2.12.

ANSWER:
$I_1 = 12$ mA,
$I_2 = -4$ mA, and
$P_{40\,\text{k}\Omega} = 5.76$ W.

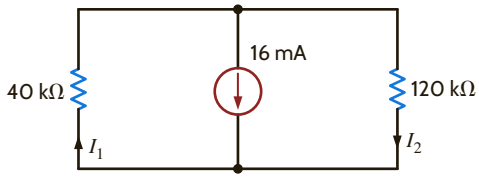

Figure E2.12

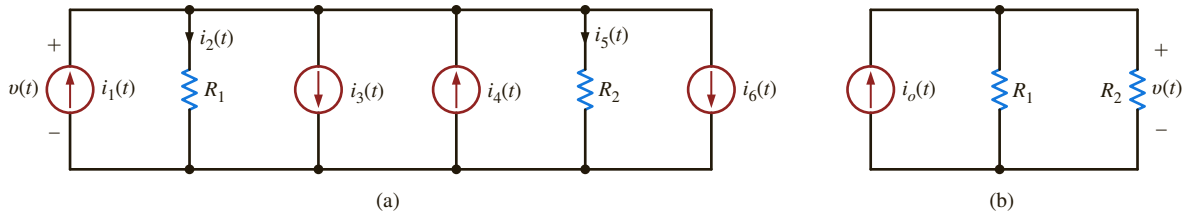

Figure 2.25
Equivalent circuits.

MULTIPLE-SOURCE/RESISTOR NETWORKS Let us now extend our analysis to include a multiplicity of current sources and resistors in parallel. For example, consider the circuit shown in **Fig. 2.25a**. We have assumed that the upper node is $v(t)$ volts positive with respect to the lower node. Applying Kirchhoff's current law to the upper node yields

$$i_1(t) - i_2(t) - i_3(t) + i_4(t) - i_5(t) - i_6(t) = 0$$

or

$$i_1(t) - i_3(t) + i_4(t) - i_6(t) = i_2(t) + i_5(t)$$

The terms on the left side of the equation all represent sources that can be combined algebraically into a single source; that is,

$$i_o(t) = i_1(t) - i_3(t) + i_4(t) - i_6(t)$$

which effectively reduces the circuit in Fig. 2.25a to that in **Fig. 2.25b**. We could, of course, generalize this analysis to a circuit with N current sources. Using Ohm's law, we can express the currents on the right side of the equation in terms of the voltage and individual resistances so that the KCL equation reduces to

$$i_o(t) = \left(\frac{1}{R_1} + \frac{1}{R_2}\right)v(t)$$

Now consider the circuit with N resistors in parallel, as shown in **Fig. 2.26a**. Applying Kirchhoff's current law to the upper node yields

$$\begin{aligned} i_o(t) &= i_1(t) + i_2(t) + \cdots + i_N(t) \\ &= \left(\frac{1}{R_1} + \frac{1}{R_2} + \cdots + \frac{1}{R_N}\right)v(t) \end{aligned} \qquad \textbf{2.21}$$

or

$$i_o(t) = \frac{v(t)}{R_p} \qquad \textbf{2.22}$$

where

$$\frac{1}{R_p} = \sum_{i=1}^{N} \frac{1}{R_i} \qquad \textbf{2.23}$$

so that as far as the source is concerned, Fig. 2.26a can be reduced to an equivalent circuit, as shown in **Fig. 2.26b**.

Figure 2.26
Equivalent circuits.

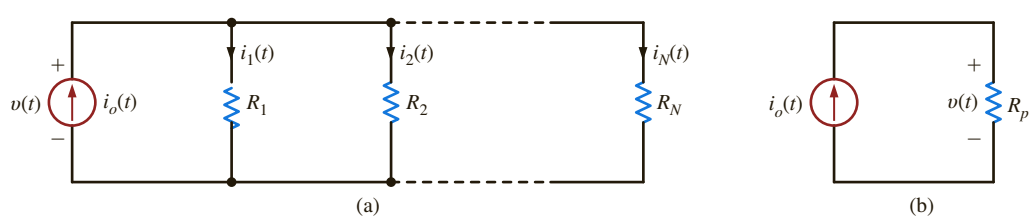

The current division for any branch can be calculated using Ohm's law and the preceding equations. For example, for the *j*th branch in the network of Fig. 2.26a,

$$i_j(t) = \frac{v(t)}{R_j}$$

Using Eq. (2.22), we obtain

$$i_j(t) = \frac{R_p}{R_j} i_o(t) \qquad \textbf{2.24}$$

which defines the current-division rule for the general case.

EXAMPLE 2.19

Given the circuit in **Fig. 2.27a**, we wish to find the current in the 12-kΩ load resistor.

SOLUTION

To simplify the network in Fig. 2.27a, we add the current sources algebraically and combine the parallel resistors in the following manner:

$$\frac{1}{R_p} = \frac{1}{18\text{k}} + \frac{1}{9\text{k}} + \frac{1}{12\text{k}}$$
$$R_p = 4\ \text{k}\Omega$$

Using these values we can reduce the circuit in Fig. 2.27a to that in **Fig. 2.27b**. Now, applying current division, we obtain

$$I_L = -\left[\frac{4\text{k}}{4\text{k} + 12\text{k}}\right](1 \times 10^{-3})$$
$$= -0.25\ \text{mA}$$

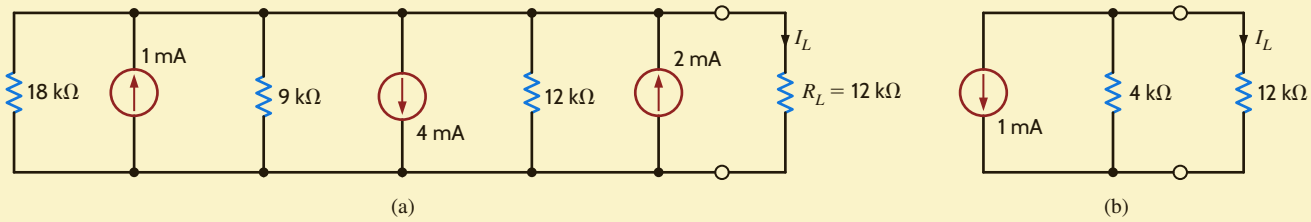

Figure 2.27
Circuits used in Example 2.19.

PROBLEM-SOLVING STRATEGY

SINGLE-NODE-PAIR CIRCUITS

STEP 1. Define a voltage $v(t)$ between the two nodes in this circuit. We know from KVL that there is only one voltage for a single-node-pair circuit. A polarity is assigned to the voltage such that one of the nodes is assumed to be at a higher potential than the other node, which we will call the reference node.

STEP 2. Using Ohm's law, define a current flowing through each resistor in terms of the defined voltage.

STEP 3. Apply KCL at one of the two nodes in the circuit.

STEP 4. Solve the single KCL equation for $v(t)$. If $v(t)$ is positive, then the reference node is actually at a lower potential than the other node; if not, the reference node is actually at a higher potential than the other node.

LEARNING ASSESSMENT

E2.13 Find the power absorbed by the 6-kΩ resistor in the network in Fig. E2.13.

ANSWER:
$P = 2.67$ mW.

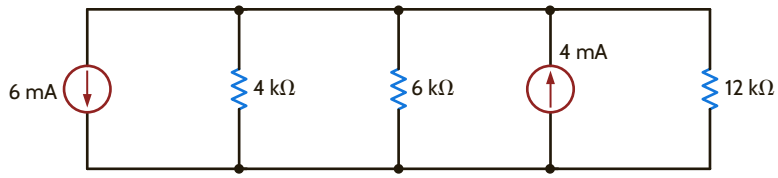

Figure E2.13

2.5 Series and Parallel Resistor Combinations

We have shown in our earlier developments that the equivalent resistance of N resistors in series is

$$R_S = R_1 + R_2 + \cdots + R_N \tag{2.25}$$

and the equivalent resistance of N resistors in parallel is found from

$$\frac{1}{R_p} = \frac{1}{R_1} + \frac{1}{R_2} + \cdots + \frac{1}{R_N} \tag{2.26}$$

Let us now examine some combinations of these two cases.

EXAMPLE 2.20

We wish to determine the resistance at terminals A-B in the network in Fig. 2.28a.

SOLUTION

Starting at the opposite end of the network from the terminals and combining resistors as shown in the sequence of circuits in Fig. 2.28, we find that the equivalent resistance at the terminals is 5 kΩ.

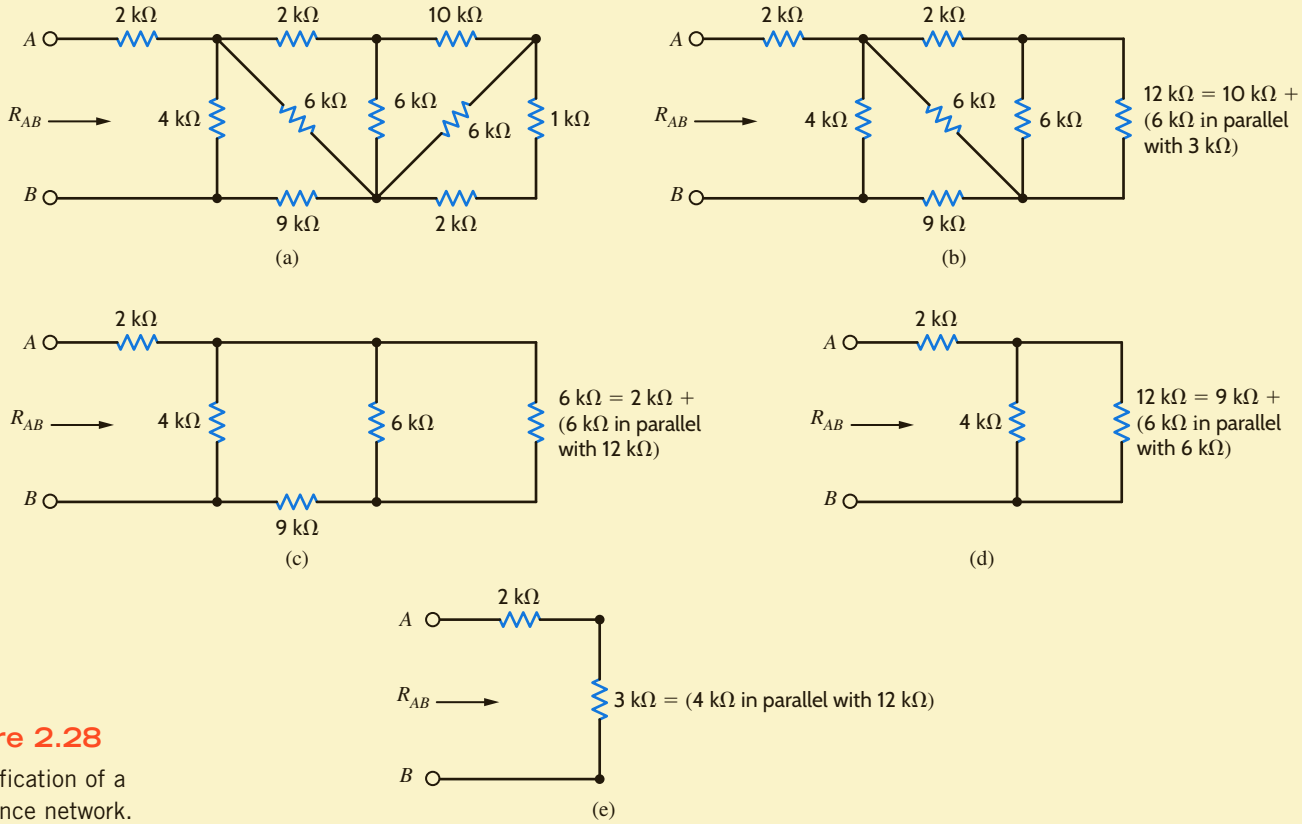

Figure 2.28
Simplification of a resistance network.

LEARNING ASSESSMENT

E2.14 Find the equivalent resistance at the terminals *A-B* in the network in Fig. E2.14.

ANSWER:
$R_{AB} = 22\ \text{k}\Omega$.

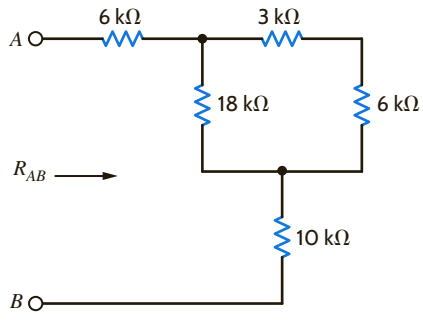

Figure E2.14

PROBLEM-SOLVING STRATEGY

SIMPLIFYING RESISTOR COMBINATIONS

When trying to determine the equivalent resistance at a pair of terminals of a network composed of an interconnection of numerous resistors, it is recommended that the analysis begin at the end of the network opposite the terminals. Two or more resistors are combined to form a single resistor, thus simplifying the network by reducing the number of components as the analysis continues in a steady progression toward the terminals. The simplification involves the following:

STEP 1. ***Resistors in series.*** Resistors R_1 and R_2 are in series if they are connected end to end with one common node and carry exactly the same current. They can then be combined into a single resistor R_S, where $R_S = R_1 + R_2$.

STEP 2. ***Resistors in parallel.*** Resistors R_1 and R_2 are in parallel if they are connected to the same two nodes and have exactly the same voltage across their terminals. They can then be combined into a single resistor R_p, where $R_p = R_1R_2/(R_1 + R_2)$.

These two combinations are used repeatedly, as needed, to reduce the network to a single resistor at the pair of terminals.

LEARNING ASSESSMENTS

E2.15 Find the equivalent resistance at the terminals *A-B* in the circuit in Fig. E2.15.

ANSWER:
$R_{AB} = 3\ \text{k}\Omega$.

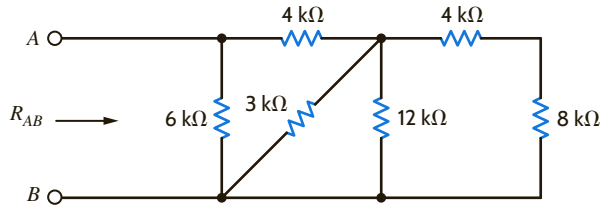

Figure E2.15

E2.16 Find R_{AB} in Fig. E2.16.

ANSWER:
$R_{AB} = 12\ \text{k}\Omega$.

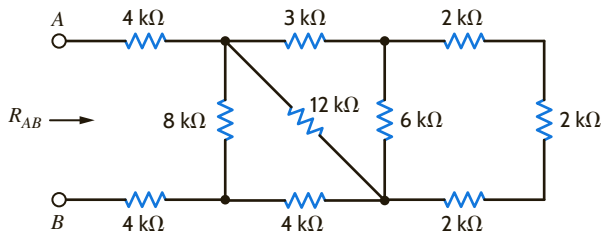

Figure E2.16

EXAMPLE 2.21

A standard dc current-limiting power supply shown in **Fig. 2.29a** provides 0–18 V at 3 A to a load. The voltage drop, V_R, across a resistor, R, is used as a current-sensing device, fed back to the power supply and used to limit the current I. That is, if the load is adjusted so that the current tries to exceed 3 A, the power supply will act to limit the current to that value. The feedback voltage, V_R, should typically not exceed 600 mV.

If we have a box of standard 0.1-Ω, 5-W resistors, let us determine the configuration of these resistors that will provide $V_R = 600$ mV when the current is 3 A.

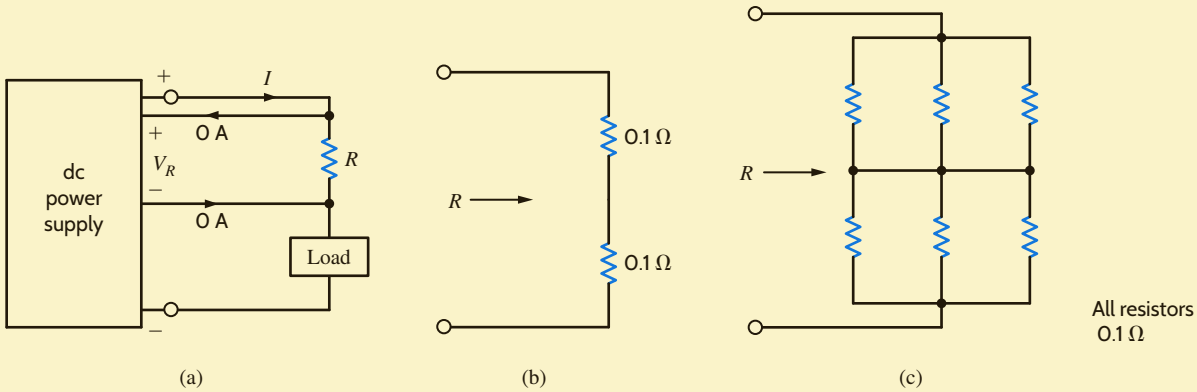

Figure 2.29
Circuits used in Example 2.21.

SOLUTION Using Ohm's law, the value of R should be

$$R = \frac{V_R}{I} = \frac{0.6}{3} = 0.2\ \Omega$$

Therefore, two 0.1-Ω resistors connected in series, as shown in **Fig. 2.29b**, will provide the proper feedback voltage. Suppose, however, that the power supply current is to be limited to 9 A. The resistance required in this case to produce $V_R = 600$ mV is

$$R = \frac{0.6}{9} = 0.0667\ \Omega$$

We must now determine how to interconnect the 0.1-Ω resistor to obtain $R = 0.0667\ \Omega$. Since the desired resistance is less than the components available (i.e., 0.1-Ω), we must connect the resistors in some type of parallel configuration. Since all the resistors are of equal value, note

that three of them connected in parallel would provide a resistance of one-third their value, or 0.0333 Ω. Then two such combinations connected in series, as shown in Fig. 2.29c, would produce the proper resistance.

Finally, we must check to ensure that the configurations in Figs. 2.29b and c have not exceeded the power rating of the resistors. In the first case, the current $I = 3$ A is present in each of the two series resistors. Therefore, the power absorbed in each resistor is

$$\begin{aligned} P &= I^2R \\ &= (3)^2(0.1) \\ &= 0.9 \text{ W} \end{aligned}$$

which is well within the 5-W rating of the resistors.

In the second case, the current $I = 9$ A. The resistor configuration for R in this case is a series combination of two sets of three parallel resistors of equal value. Using current division, we know that the current I will split equally among the three parallel paths and, hence, the current in each resistor will be 3 A. Therefore, once again, the power absorbed by each resistor is within its power rating.

EXAMPLE 2.22

We wish to find all the currents and voltages labeled in the ladder network shown in Fig. 2.30a.

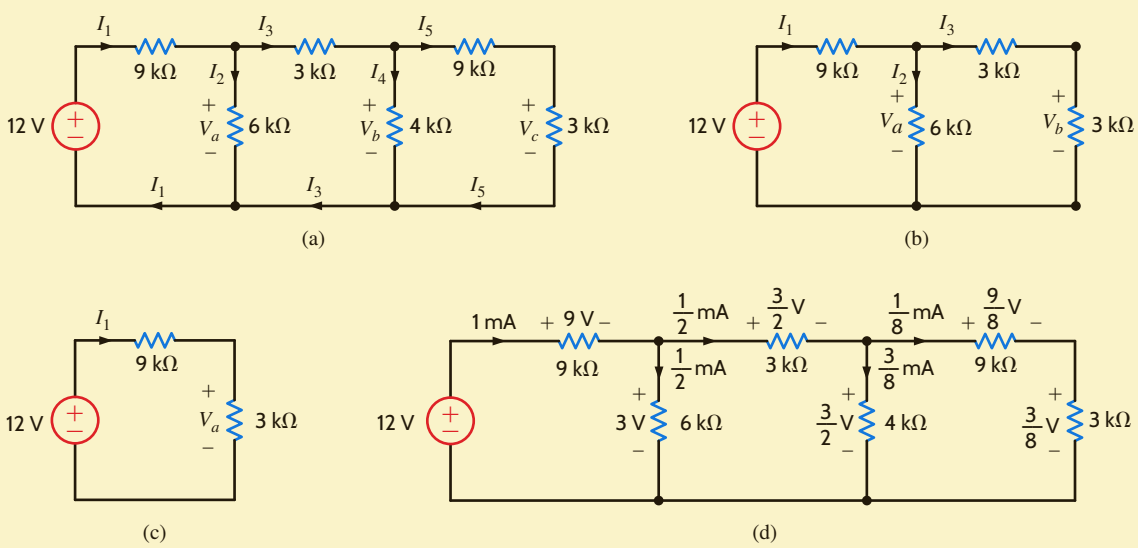

Figure 2.30
Analysis of a ladder network.

SOLUTION

To begin our analysis of the network, we start at the right end of the circuit and combine the resistors to determine the total resistance seen by the 12-V source. This will allow us to calculate the current I_1. Then employing KVL, KCL, Ohm's law, and/or voltage and current division, we will be able to calculate all currents and voltages in the network.

At the right end of the circuit, the 9-kΩ and 3-kΩ resistors are in series and, thus, can be combined into one equivalent 12-kΩ resistor. This resistor is in parallel with the 4-kΩ resistor, and their combination yields an equivalent 3-kΩ resistor, shown at the right edge of the circuit in Fig. 2.30b. In Fig. 2.30b the two 3-kΩ resistors are in series, and their combination is in parallel with the 6-kΩ resistor. Combining all three resistances yields the circuit shown in Fig. 2.30c.

Applying Kirchhoff's voltage law to the circuit in Fig. 2.30c yields

$$I_1(9\text{k} + 3\text{k}) = 12$$
$$I_1 = 1 \text{ mA}$$

V_a can be calculated from Ohm's law as

$$V_a = I_1(3\text{k})$$
$$= 3 \text{ V}$$

or, using Kirchhoff's voltage law,

$$V_a = 12 - 9\text{k}I_1$$
$$= 12 - 9$$
$$= 3 \text{ V}$$

Knowing I_1 and V_a, we can now determine all currents and voltages in Fig. 2.30b. Since $V_a = 3$ V, the current I_2 can be found using Ohm's law as

$$I_2 = \frac{3}{6\text{k}}$$
$$= \frac{1}{2} \text{ mA}$$

Then, using Kirchhoff's current law, we have

$$I_1 = I_2 + I_3$$
$$1 \times 10^{-3} = \frac{1}{2} \times 10^{-3} + I_3$$
$$I_3 = \frac{1}{2} \text{ mA}$$

Note that the I_3 could also be calculated using Ohm's law:

$$V_a = (3\text{k} + 3\text{k})I_3$$
$$I_3 = \frac{3}{6\text{k}}$$
$$= \frac{1}{2} \text{ mA}$$

Applying Kirchhoff's voltage law to the right-hand loop in Fig. 2.30b yields

$$V_a - V_b = 3\text{k}I_3$$
$$3 - V_b = \frac{3}{2}$$
$$V_b = \frac{3}{2} \text{ V}$$

or, since V_b is equal to the voltage drop across the 3-kΩ resistor, we could use Ohm's law as

$$V_b = 3\text{k}I_3$$
$$= \frac{3}{2}\text{V}$$

We are now in a position to calculate the final unknown currents and voltages in Fig. 2.30a. Knowing V_b, we can calculate I_4 using Ohm's law as

$$V_b = 4kI_4$$
$$I_4 = \frac{\frac{3}{2}}{4\text{k}}$$
$$= \frac{3}{8}\text{mA}$$

Then, from Kirchhoff's current law, we have

$$I_3 = I_4 + I_5$$
$$\frac{1}{2} \times 10^{-3} = \frac{3}{8} \times 10^{-3} + I_5$$
$$I_5 = \frac{1}{8}\text{ mA}$$

We could also have calculated I_5 using the current-division rule. For example,

$$I_5 = \frac{4\text{k}}{4\text{k} + (9\text{k} + 3\text{k})} I_3$$
$$= \frac{1}{8}\text{ mA}$$

Finally, V_c can be computed as

$$V_c = I_5(3\text{k})$$
$$= \frac{3}{8}\text{ V}$$

V_c can also be found using voltage division (i.e., the voltage V_b will be divided between the 9-kΩ and 3-kΩ resistors). Therefore,

$$V_c = \left[\frac{3\text{k}}{3\text{k} + 9\text{k}}\right] V_b$$
$$= \frac{3}{8}\text{ V}$$

Note that Kirchhoff's current law is satisfied at every node and Kirchhoff's voltage law is satisfied around every loop, as shown in **Fig. 2.30d**.

The following example is, in essence, the reverse of the previous example in that we are given the current in some branch in the network and are asked to find the value of the input source.

EXAMPLE 2.23

Given the circuit in **Fig. 2.31** and $I_4 = 1/2$ mA, let us find the source voltage V_o.

SOLUTION

If $I_4 = 1/2$ mA, then from Ohm's law, $V_b = 3$ V. V_b can now be used to calculate $I_3 = 1$ mA. Kirchhoff's current law applied at node y yields

$$I_2 = I_3 + I_4$$
$$= 1.5\text{ mA}$$

Then, from Ohm's law, we have

$$V_a = (1.5 \times 10^{-3})(2\text{k})$$
$$= 3\text{ V}$$

Since $V_a + V_b$ is now known, I_5 can be obtained:

$$I_5 = \frac{V_a + V_b}{3\text{k} + 1\text{k}}$$
$$= 1.5\text{ mA}$$

Applying Kirchhoff's current law at node x yields

$$I_1 = I_2 + I_5$$
$$= 3\text{ mA}$$

Now KVL applied to any closed path containing V_o will yield the value of this input source. For example, if the path is the outer loop, KVL yields

$$-V_o + 6\text{k}I_1 + 3\text{k}I_5 + 1\text{k}I_5 + 4\text{k}I_1 = 0$$

Since $I_1 = 3$ mA and $I_5 = 1.5$ mA,

$$V_o = 36 \text{ V}$$

If we had selected the path containing the source and the points x, y, and z, we would obtain

$$-V_o + 6\text{k}I_1 + V_a + V_b + 4\text{k}I_1 = 0$$

Once again, this equation yields

$$V_o = 36 \text{ V}$$

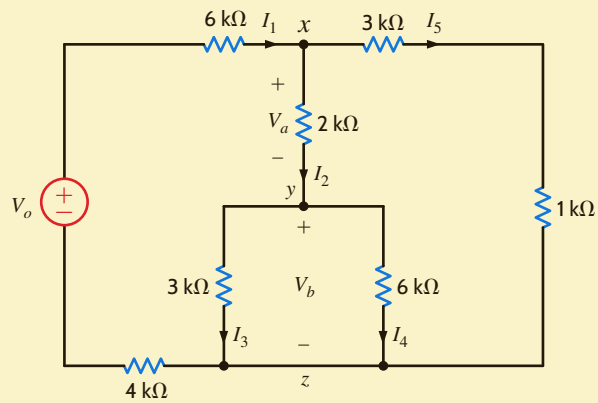

Figure 2.31
Example circuit for analysis.

PROBLEM-SOLVING STRATEGY

ANALYZING CIRCUITS CONTAINING A SINGLE SOURCE AND A SERIES-PARALLEL INTERCONNECTION OF RESISTORS

STEP 1. Systematically reduce the resistive network so that the resistance seen by the source is represented by a single resistor.

STEP 2. Determine the source current for a voltage source or the source voltage if a current source is present.

STEP 3. Expand the network, retracing the simplification steps, and apply Ohm's law, KVL, KCL, voltage division, and current division to determine all currents and voltages in the network.

LEARNING ASSESSMENTS

E2.17 Find V_o in the network in Fig. E2.17.

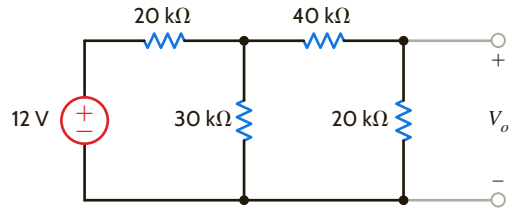

Figure E2.17

ANSWER:
$V_o = 2$ V.

E2.18 Find V_S in the circuit in Fig. E2.18.

ANSWER:
$V_S = 9$ V.

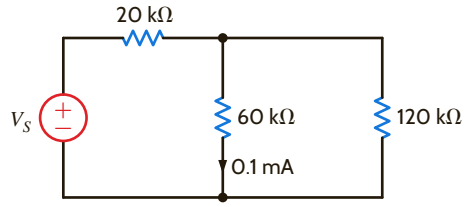

Figure E2.18

E2.19 Find I_S in the circuit in Fig. E2.19.

ANSWER:
$I_S = 0.3$ mA.

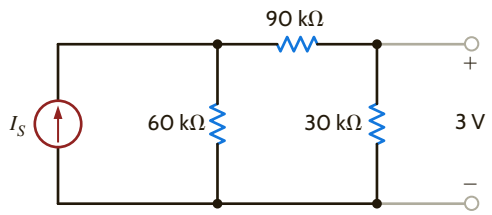

Figure E2.19

E2.20 Find V_1 in Fig. E2.20.

ANSWER:
$V_1 = 12$ V.

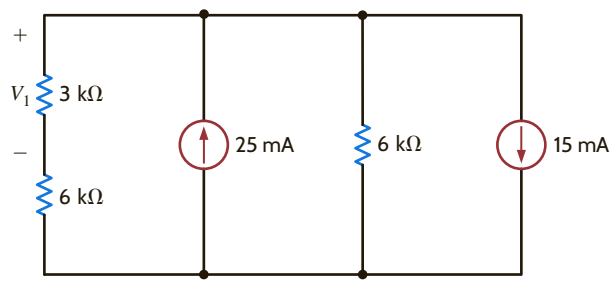

Figure E2.20

E2.21 Find I_0 in Fig. E2.21.

ANSWER:
$I_0 = -4$ mA.

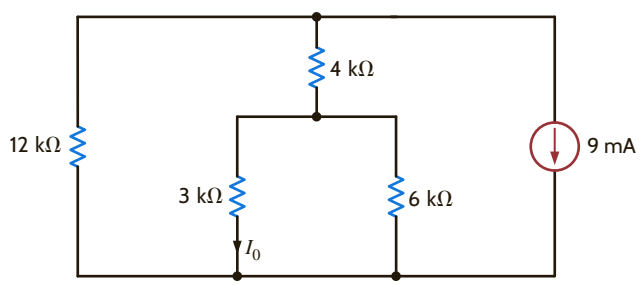

Figure E2.21

E2.22 Find V_o, V_1, and V_2 in Fig. E2.22.

ANSWER:
$V_o = 3.33$ V,
$V_1 = -4$ V, and $V_2 = 4$ V.

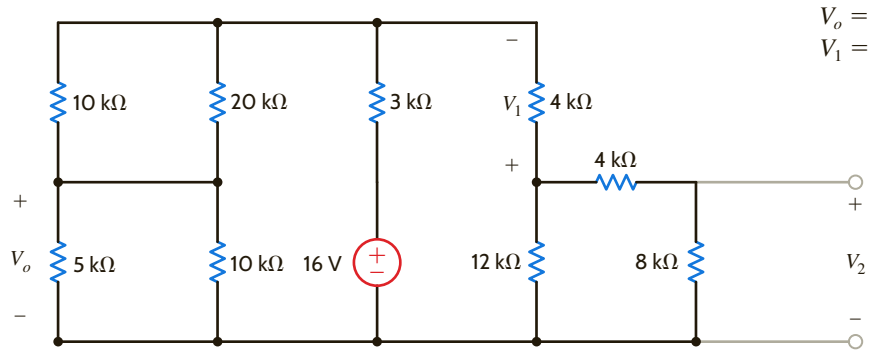

Figure E2.22

E2.23 Find V_o and V_1 in Fig. E2.23.

ANSWER:
$V_o = -60$ V;
$V_1 = 10$ V.

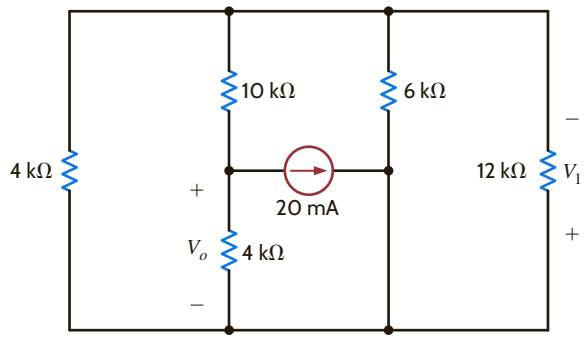

Figure E2.23

EXAMPLE 2.24

Consider the network in Fig. 2.32a. Given that $V_{DE} = V_o = 4$ V, find the value of the voltage source V_S and the voltage across the current source V_{AD}.

By using Kirchhoff's laws and Ohm's law, we can calculate the desired quantities. Since $V_{DE} = 4$ V, using Ohm's law we obtain $I_8 = 2$ A. Applying Kirchhoff's current law

Figure 2.32
Example circuit containing a current source.

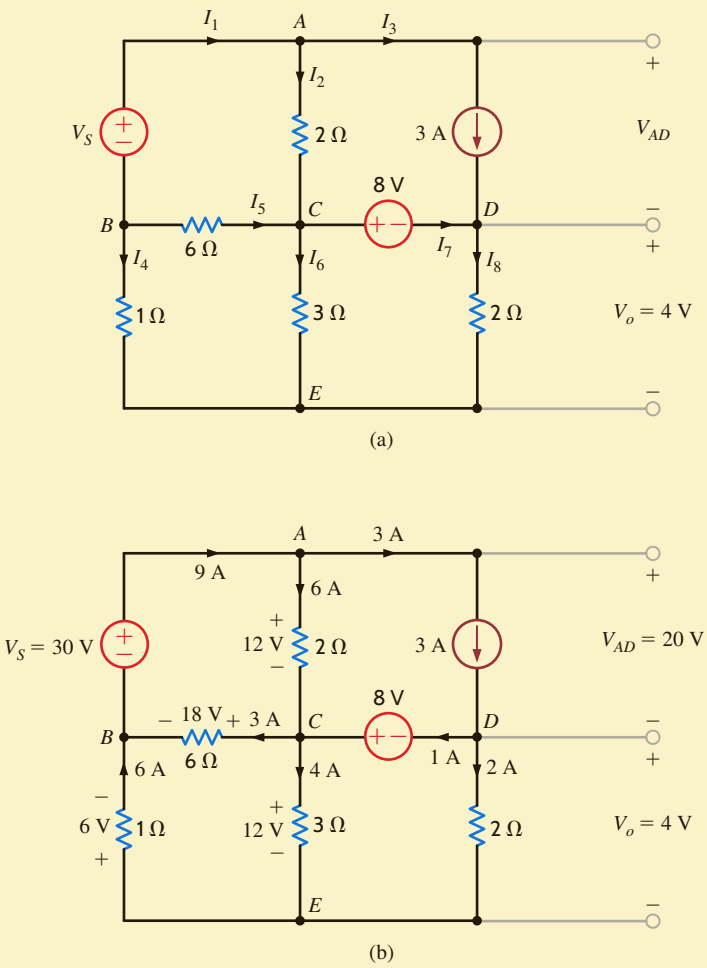

at node D yields

$$I_3 + I_7 = I_8$$

Solving for I_7 we obtain

$$I_7 = -1 \text{ A}$$

Then since

$$\begin{aligned} V_{CE} &= V_{CD} + V_{DE} \\ &= 8 + 4 \\ &= 12 \text{ V} \end{aligned}$$

I_6 can be obtained from Ohm's law as 4 A. Kirchhoff's current law at node E yields

$$I_4 + I_6 + I_8 = 0$$

and hence $I_4 = -6$ A. Then since

$$\begin{aligned} V_{CB} &= V_{CE} + V_{EB} \\ &= 12 + (6)(1) \\ &= 18 \text{ V} \end{aligned}$$

Ohm's law yields $I_5 = -3$ A. At node C,

$$I_2 + I_5 = I_6 + I_7$$

Solving for the only unknown I_2 yields $I_2 = 6$ A. Then

$$\begin{aligned} V_{AC} &= (6)(2) \\ &= 12 \text{ V} \end{aligned}$$

The only remaining unknown current is I_1. At node A

$$\begin{aligned} I_1 &= I_2 + I_3 \\ &= 9 \text{ A} \end{aligned}$$

Now Kirchhoff's voltage law around the upper left-hand loop yields

$$V_S - V_{AC} - V_{CB} = 0$$

or

$$V_S = 30 \text{ V}$$

Kirchhoff's voltage law around the upper right-hand loop yields

$$V_{AC} - V_{AD} + 8 = 0$$

or

$$V_{AD} = 20 \text{ V}$$

The circuit with all voltage and currents labeled is shown in **Fig. 2.32b**. Note carefully that Kirchhoff's current law is satisfied at every node and Kirchhoff's voltage law is satisfied around every loop.

2.6 Wye ⇌ Delta Transformations

To provide motivation for this topic, consider the circuit in **Fig. 2.33**. Note that this network has essentially the same number of elements as contained in our recent examples. However, when we attempt to reduce the circuit to an equivalent network containing the source V_1 and an equivalent resistor R, we find that nowhere is a resistor in series or parallel with another. Therefore, we cannot attack the problem directly using the techniques that we have learned thus far. We can, however, replace one portion of the network with an equivalent circuit, and this

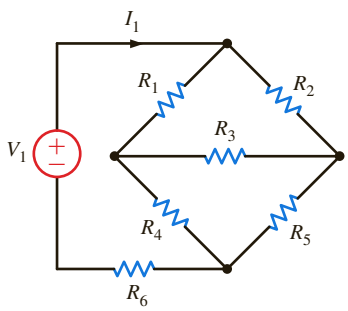

Figure 2.33

Network used to illustrate the need for the wye $\rightleftharpoons$ delta transformation.

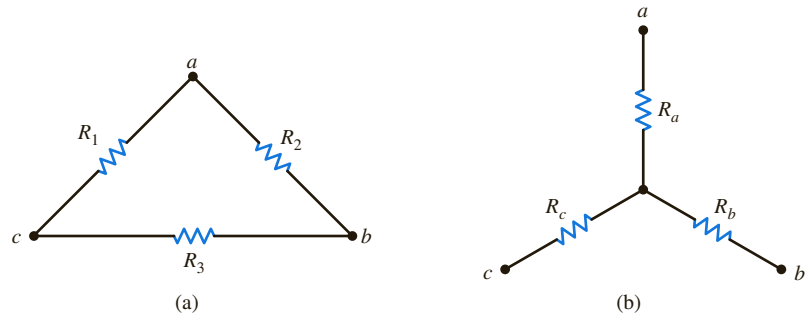

Figure 2.34

Delta and wye resistance networks.

conversion will permit us, with ease, to reduce the combination of resistors to a single equivalent resistance. This conversion is called the wye-to-delta or delta-to-wye transformation.

Consider the networks shown in **Fig. 2.34**. Note that the resistors in **Fig. 2.34a** form a Δ (delta) and the resistors in **Fig. 2.34b** form a Y (wye). If both of these configurations are connected at only three terminals a, b, and c, it would be very advantageous if an equivalence could be established between them. It is, in fact, possible to relate the resistances of one network to those of the other such that their terminal characteristics are the same. This relationship between the two network configurations is called the Y-Δ transformation.

The transformation that relates the resistances R_1, R_2, and R_3 to the resistances R_a, R_b, and R_c is derived as follows. For the two networks to be equivalent at each corresponding pair of terminals, it is necessary that the resistance at the corresponding terminals be equal (e.g., the resistance at terminals a and b with c open-circuited must be the same for both networks).

Therefore, if we equate the resistances for each corresponding set of terminals, we obtain the following equations:

$$\begin{aligned} R_{ab} &= R_a + R_b = \frac{R_2(R_1 + R_3)}{R_2 + R_1 + R_3} \\ R_{bc} &= R_b + R_c = \frac{R_3(R_1 + R_2)}{R_3 + R_1 + R_2} \\ R_{ca} &= R_c + R_a = \frac{R_1(R_2 + R_3)}{R_1 + R_2 + R_3} \end{aligned} \tag{2.27}$$

Solving this set of equations for R_a, R_b, and R_c yields

$$\begin{aligned} R_a &= \frac{R_1R_2}{R_1 + R_2 + R_3} \\ R_b &= \frac{R_2R_3}{R_1 + R_2 + R_3} \\ R_c &= \frac{R_1R_3}{R_1 + R_2 + R_3} \end{aligned} \tag{2.28}$$

Similarly, if we solve Eq. (2.27) for R_1, R_2, and R_3, we obtain

$$\begin{aligned} R_1 &= \frac{R_aR_b + R_bR_c + R_aR_c}{R_b} \\ R_2 &= \frac{R_aR_b + R_bR_c + R_aR_c}{R_c} \\ R_3 &= \frac{R_aR_b + R_bR_c + R_aR_c}{R_a} \end{aligned} \tag{2.29}$$

Equations (2.28) and (2.29) are general relationships and apply to any set of resistances connected in a Y or Δ. For the balanced case where $R_a = R_b = R_c$ and $R_1 = R_2 = R_3$, the equations above reduce to

$$R_Y = \frac{1}{3}R_\Delta \qquad \textbf{2.30}$$

and

$$R_\Delta = 3R_Y \qquad \textbf{2.31}$$

It is important to note that it is not necessary to memorize the formulas in Eqs. (2.28) and (2.29). Close inspection of these equations and **Fig. 2.34** illustrates a definite pattern to the relationships between the two configurations. For example, the resistance connected to point a in the wye (i.e., R_a) is equal to the product of the two resistors in the Δ that are connected to point a divided by the sum of all the resistances in the delta. R_b and R_c are determined in a similar manner. Similarly, there are geometrical patterns associated with the equations for calculating the resistors in the delta as a function of those in the wye.

Let us now examine the use of the delta ⇌ wye transformation in the solution of a network problem.

EXAMPLE 2.25

Given the network in **Fig. 2.35a**, let us find the source current I_S.

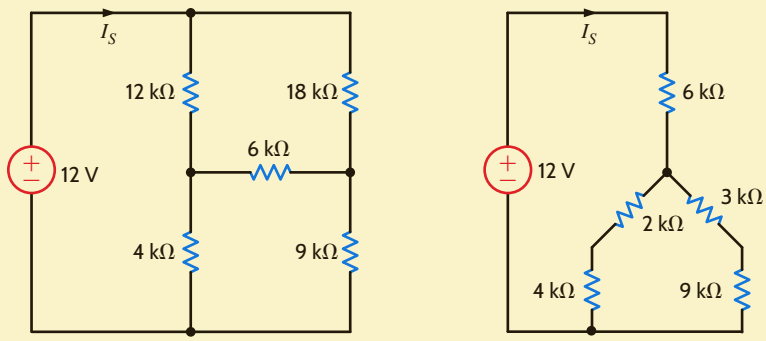

Figure 2.35
Circuits used in Example 2.25.

SOLUTION

Note that none of the resistors in the circuit are in series or parallel. However, careful examination of the network indicates that the 12k-, 6k-, and 18k-ohm resistors, as well as the 4k-, 6k-, and 9k-ohm resistors each form a delta that can be converted to a wye. Furthermore, the 12k-, 6k-, and 4k-ohm resistors, as well as the 18k-, 6k-, and 9k-ohm resistors, each form a wye that can be converted to a delta. Any one of these conversions will lead to a solution. We will perform a delta-to-wye transformation on the 12k-, 6k-, and 18k-ohm resistors, which leads to the circuit in **Fig. 2.35b**. The 2k- and 4k-ohm resistors, like the 3k- and 9k-ohm resistors, are in series and their parallel combination yields a 4k-ohm resistor. Thus, the source current is

$$I_S = 12/(6\text{k} + 4\text{k})$$
$$= 1.2 \text{ mA}$$

EXAMPLE 2.26

A Wheatstone bridge circuit is an accurate device for measuring resistance. This circuit, shown in **Fig. 2.36**, is used to measure the unknown resistor R_x. The center leg of the circuit contains a galvanometer, which is a very sensitive device that can be used to measure current in the microamp range When the unknown resistor is connected to the bridge, R_3 is adjusted until the current in the galvanometer is zero, at which point the bridge is balanced. In this balanced condition

$$\frac{R_1}{R_3} = \frac{R_2}{R_x}$$

so that

$$R_x = \left(\frac{R_2}{R_1}\right)R_3$$

Figure 2.36

The Wheatstone bridge circuit.

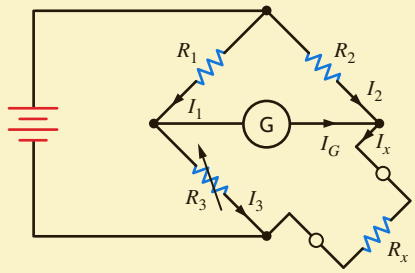

Engineers also use this bridge circuit to measure strain in solid material. For example, a system used to determine the weight of a truck is shown in **Fig. 2.37a**. The platform is supported by cylinders on which strain gauges are mounted. The strain gauges, which measure strain when the cylinder deflects under load, are connected to a Wheatstone bridge as shown in **Fig. 2.37b**. The strain gauge has a resistance of 120 Ω under no-load conditions and changes value under load. The variable resistor in the bridge is a calibrated precision device.

Weight is determined in the following manner. The ΔR_3 required to balance the bridge represents the Δ strain, which when multiplied by the modulus of elasticity yields the Δ stress. The Δ stress multiplied by the cross-sectional area of the cylinder produces the Δ load, which is used to determine weight.

Let us determine the value of R_3 under no load when the bridge is balanced and its value when the resistance of the strain gauge changes to 120.24 Ω under load.

SOLUTION

Using the balance equation for the bridge, the value of R_3 at no load is

$$R_3 = \left(\frac{R_1}{R_2}\right)R_x$$
$$= \left(\frac{100}{110}\right)(120)$$
$$= 109.0909\ \Omega$$

Under load, the value of R_3 is

$$R_3 = \left(\frac{100}{110}\right)(120.24)$$
$$= 109.3091\ \Omega$$

Therefore, the ΔR_3 is

$$\Delta R_3 = 109.3091 - 109.0909$$
$$= 0.2182\ \Omega$$

Figure 2.37

Diagrams used in Example 2.26.

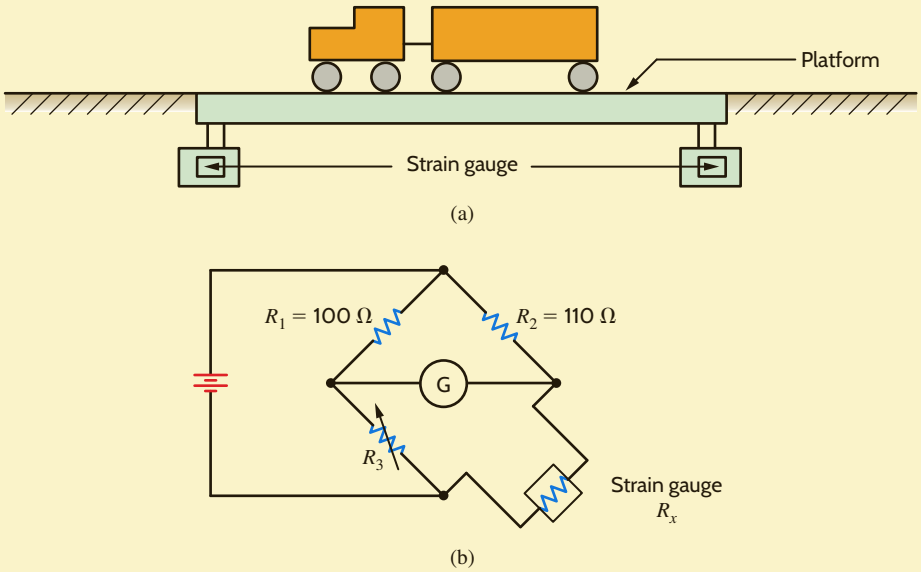

LEARNING ASSESSMENTS

E2.24 Determine the total resistance R_T in the circuit in Fig. E2.24.

ANSWER:
$R_T = 34\ \text{k}\Omega$.

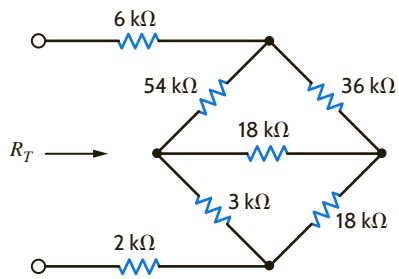

Figure E2.24

E2.25 Find V_o in the network in Fig. E2.25.

ANSWER:
$V_o = 24$ V.

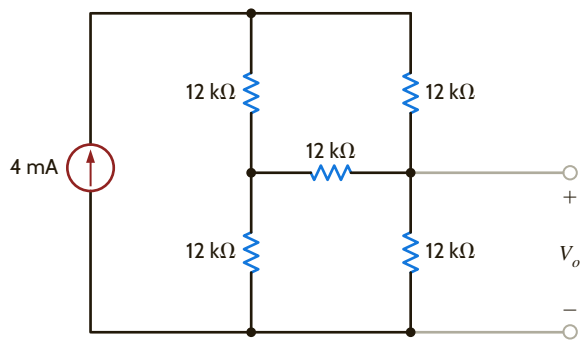

Figure E2.25

E2.26 Find I_1 in Fig. E2.26.

ANSWER:
$I_1 = -1.2$ A.

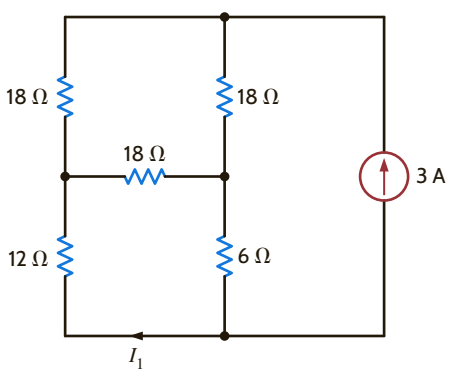

Figure E2.26

2.7 Circuits with Dependent Sources

In Chapter 1 we outlined the different kinds of dependent sources. These controlled sources are extremely important because they are used to model physical devices such as *npn* and *pnp* bipolar junction transistors (BJTs) and field-effect transistors (FETs) that are either metal-oxide-semiconductor field-effect transistors (MOSFETs) or insulated-gate field-effect transistors (IGFETs). These basic structures are, in turn, used to make analog and digital devices. A typical analog device is an operational amplifier (op-amp). This device is presented in Chapter 4. Typical digital devices are random access memories (RAMs), read-only memories (ROMs), and microprocessors. We will now show how to solve simple one-loop and one-node circuits that contain these dependent sources. Although the following examples are fairly simple, they will serve to illustrate the basic concepts.

PROBLEM-SOLVING STRATEGY

CIRCUITS WITH DEPENDENT SOURCES

STEP 1. When writing the KVL and/or KCL equations for the network, treat the dependent source as though it were an independent source.

STEP 2. Write the equation that specifies the relationship of the dependent source to the controlling parameter.

STEP 3. Solve the equations for the unknowns. Be sure that the number of linearly independent equations matches the number of unknowns.

The following four examples will each illustrate one of the four types of dependent sources: current-controlled voltage source, current-controlled current source, voltage-controlled voltage source, and voltage-controlled current source.

EXAMPLE 2.27

Let us determine the voltage V_o in the circuit in Fig. 2.38.

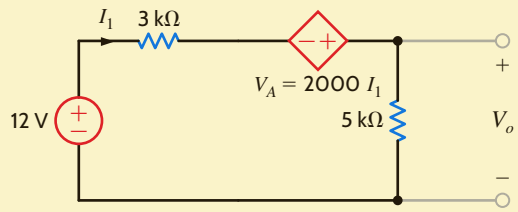

Figure 2.38
Circuit used in Example 2.27.

SOLUTION

Applying KVL, we obtain

$$-12 + 3\text{k}I_1 - V_A + 5\text{k}I_1 = 0$$

where

$$V_A = 2000I_1$$

and the units of the multiplier, 2000, are ohms. Solving these equations yields

$$I_1 = 2 \text{ mA}$$

Then

$$V_o = (5 \text{ k})I_1$$
$$= 10 \text{ V}$$

EXAMPLE 2.28

Given the circuit in Fig. 2.39 containing a current-controlled current source, let us find the voltage V_o.

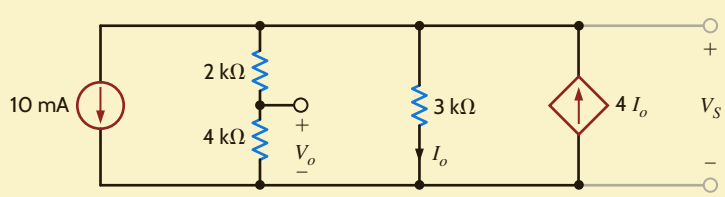

Figure 2.39
Circuit used in Example 2.28.

SOLUTION

Applying KCL at the top node, we obtain

$$10 \times 10^{-3} + \frac{V_S}{2\text{k} + 4\text{k}} + \frac{V_S}{3\text{k}} - 4\text{m}I_o = 0$$

where

$$I_o = \frac{V_S}{3\text{k}}$$

Substituting this expression for the controlled source into the KCL equation yields

$$10^{-2} + \frac{V_S}{6\text{k}} + \frac{V_S}{3\text{k}} - \frac{4V_S}{3\text{k}} = 0$$

Solving this equation for V_S, we obtain

$$V_S = 12 \text{ V}$$

The voltage V_o can now be obtained using a simple voltage divider; that is,

$$V_o = \left[\frac{4\text{k}}{2\text{k} + 4\text{k}}\right] V_S$$
$$= 8 \text{ V}$$

EXAMPLE 2.29

The network in Fig. 2.40 contains a voltage-controlled voltage source. We wish to find V_o in this circuit.

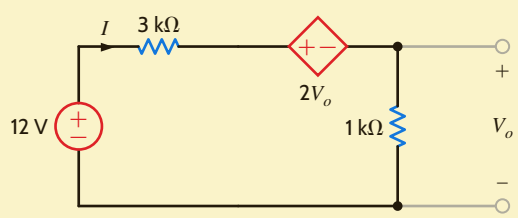

Figure 2.40
Circuit used in Example 2.29.

SOLUTION

Applying KVL to this network yields

$$-12 + 3\text{k}I + 2V_o + 1\text{k}I = 0$$

where

$$V_o = 1\text{k}I$$

Hence, the KVL equation can be written as

$$-12 + 3\text{k}I + 2\text{k}I + 1\text{k}I = 0$$

or

$$I = 2 \text{ mA}$$

Therefore,

$$V_o = 1\text{k}I$$
$$= 2 \text{ V}$$

EXAMPLE 2.30

An equivalent circuit for a FET common-source amplifier or BJT common-emitter amplifier can be modeled by the circuit shown in **Fig. 2.41a**. We wish to determine an expression for the gain of the amplifier, which is the ratio of the output voltage to the input voltage.

Figure 2.41
Example circuit containing a voltage-controlled current source.

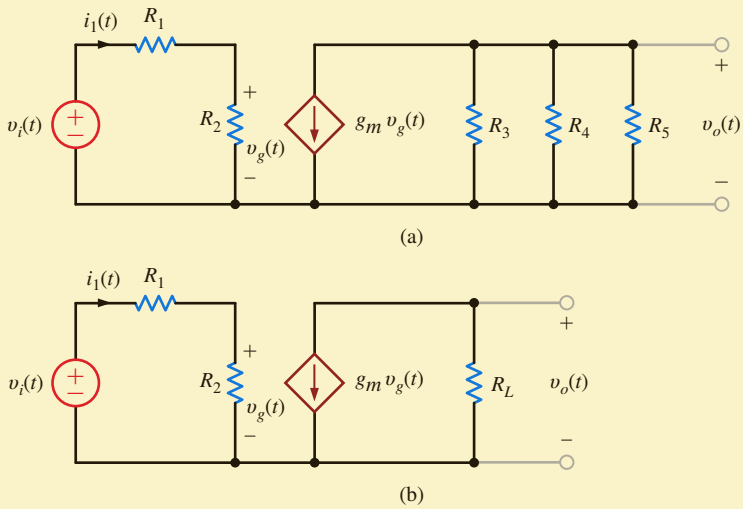

SOLUTION

Note that although this circuit, which contains a voltage-controlled current source, appears to be somewhat complicated, we are actually in a position now to solve it with techniques we have studied up to this point. The loop on the left, or input to the amplifier, is essentially detached from the output portion of the amplifier on the right. The voltage across R_2 is $v_g(t)$, which controls the dependent current source.

To simplify the analysis, let us replace the resistors R_3, R_4, and R_5 with R_L such that

$$\frac{1}{R_L} = \frac{1}{R_3} + \frac{1}{R_4} + \frac{1}{R_5}$$

Then the circuit reduces to that shown in **Fig. 2.41b**. Applying Kirchhoff's voltage law to the input portion of the amplifier yields

$$v_i(t) = i_1(t)(R_1 + R_2)$$

and

$$v_g(t) = i_1(t)R_2$$

Solving these equations for $v_g(t)$ yields

$$v_g(t) = \frac{R_2}{R_1 + R_2} v_i(t)$$

From the output circuit, note that the voltage $v_o(t)$ is given by the expression

$$v_o(t) = -g_m v_g(t) R_L$$

Combining this equation with the preceding one yields

$$v_o(t) = \frac{-g_m R_L R_2}{R_1 + R_2} v_i(t)$$

Therefore, the amplifier gain, which is the ratio of the output voltage to the input voltage, is given by

$$\frac{v_o(t)}{v_i(t)} = -\frac{g_m R_L R_2}{R_1 + R_2}$$

Reasonable values for the circuit parameters in Fig. 2.41a are $R_1 = 100\ \Omega$, $R_2 = 1\ \text{k}\Omega$, $g_m = 0.04$ S, $R_3 = 50\ \text{k}\Omega$, and $R_4 = R_5 = 10\ \text{k}\Omega$. Hence, the gain of the amplifier under these conditions is

$$\frac{v_o(t)}{v_i(t)} = \frac{-(0.04)(4.545)(10^3)(1)(10^3)}{(1.1)(10^3)}$$
$$= -165.29$$

Thus, the magnitude of the gain is 165.29.

At this point it is perhaps helpful to point out again that when analyzing circuits with dependent sources, we first treat the dependent source as though it were an independent source when we write a Kirchhoff's current or voltage law equation. Once the equation is written, we then write the controlling equation that specifies the relationship of the dependent source to the unknown variable. For instance, the first equation in Example 2.28 treats the dependent source like an independent source. The second equation in the example specifies the relationship of the dependent source to the voltage, which is the unknown in the first equation.

LEARNING ASSESSMENTS

E2.27 Find V_o in the circuit in Fig. E2.27.

ANSWER: $V_o = 12$ V.

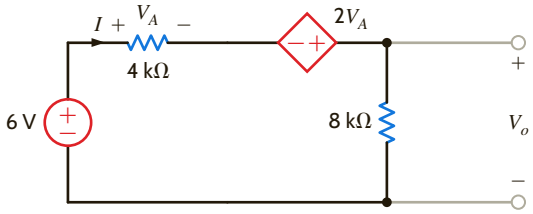

Figure E2.27

E2.28 Find V_o in the network in Fig. E2.28.

ANSWER: $V_o = 8$ V.

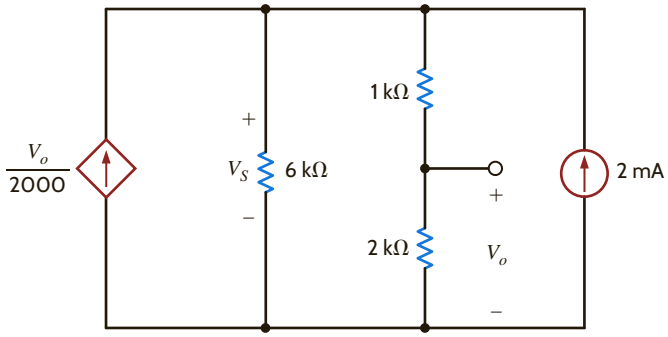

Figure E2.28

E2.29 Find V_A in Fig. E2.29.

ANSWER: $V_A = -12$ V.

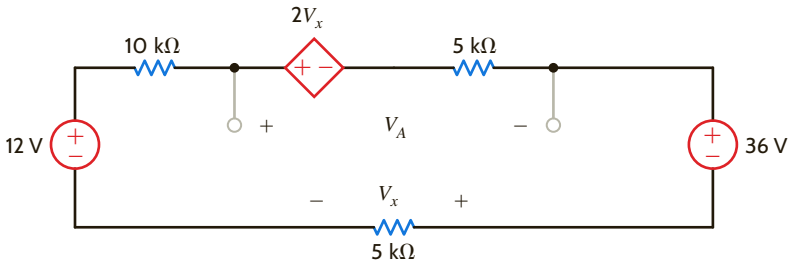

Figure E2.29

E2.30 Find V_1 in Fig. E2.30.

ANSWER:
$V_1 = -32/3$ V.

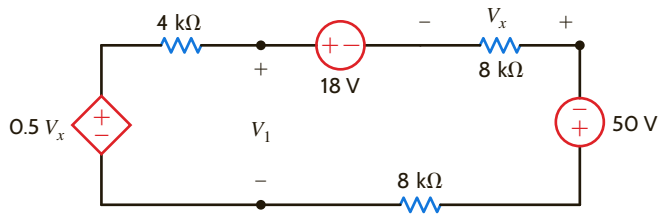

Figure E2.30

E2.31 Find I_x in Fig. E2.31.

ANSWER:
$I_x = -1.5$ mA.

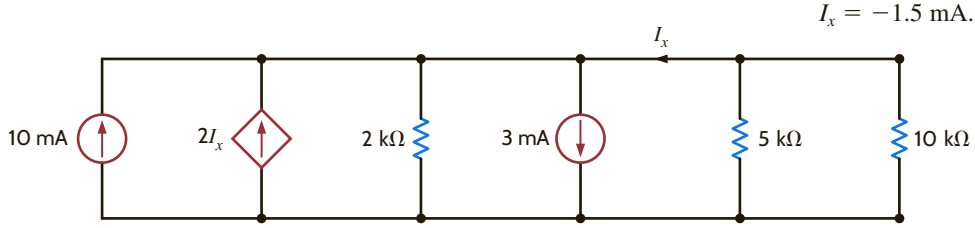

Figure E2.31

E2.32 Find V_o in Fig. E2.32.

ANSWER:
$V_o = 16$ V.

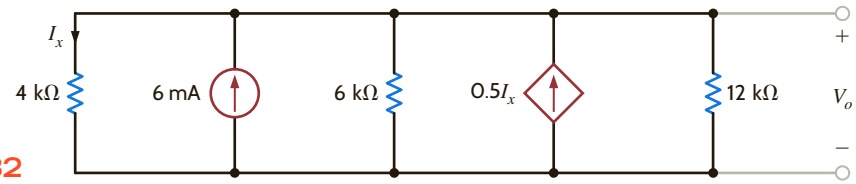

Figure E2.32

E2.33 If the power supplied by the 3-A current source in Fig. E2.33 is 12 W, find V_S and the power supplied by the 10-V source.

ANSWER:
$V_S = 42$ V;
-30 W.

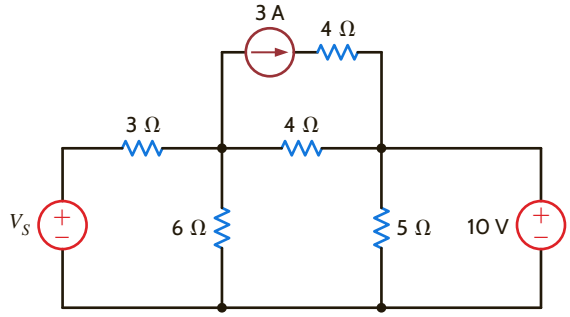

Figure E2.33

SUMMARY

- ***Ohm's law*** $V = IR$
- ***The passive sign convention with Ohm's law*** The current enters the resistor terminal with the positive voltage reference.
- ***Kirchhoff's current law (KCL)*** The algebraic sum of the currents leaving (entering) a node is zero.
- ***Kirchhoff's voltage law (KVL)*** The algebraic sum of the voltages around any closed path is zero.
- ***Solving a single-loop circuit*** Determine the loop current by applying KVL and Ohm's law.
- ***Solving a single-node-pair circuit*** Determine the voltage between the pair of nodes by applying KCL and Ohm's law.
- ***The voltage-division rule*** The voltage is divided between two series resistors in direct proportion to their resistance.
- ***The current-division rule*** The current is divided between two parallel resistors in reverse proportion to their resistance.

- ***The equivalent resistance of a network of resistors*** Combine resistors in series by adding their resistances. Combine resistors in parallel by adding their conductances. The wye-to-delta and delta-to-wye transformations are also an aid in reducing the complexity of a network.
- ***Short circuit*** Zero resistance, zero voltage; the current in the short is determined by the rest of the circuit.
- ***Open circuit*** Zero conductance, zero current; the voltage across the open terminals is determined by the rest of the circuit.

PROBLEMS

2.1 Determine the current and power dissipated in the resistor in Fig. P2.1.

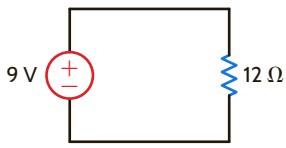

Figure P2.1

2.2 Determine the voltage across the resistor in Fig. P2.2 and the power dissipated.

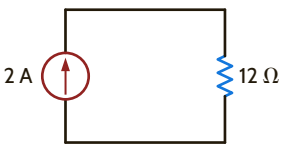

Figure P2.2

2.3 In the network in Fig. P2.3, the power absorbed by R_x is 20 mW. Find R_x.

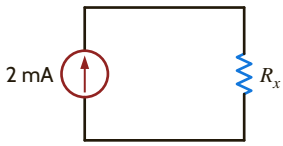

Figure P2.3

2.4 In the network in Fig. P2.4, the power absorbed by G_x is 20 mW. Find G_x.

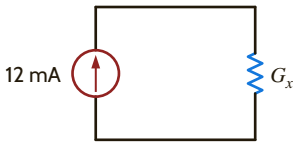

Figure P2.4

2.5 A model for a standard two D-cell flashlight is shown in Fig. P2.5. Find the power dissipated in the lamp.

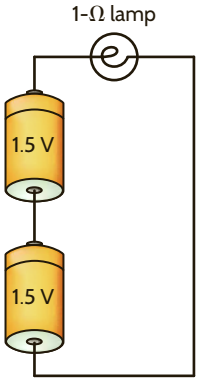

Figure P2.5

2.6 An automobile uses two halogen headlights connected as shown in Fig. P2.6. Determine the power supplied by the battery if each headlight draws 3 A of current.

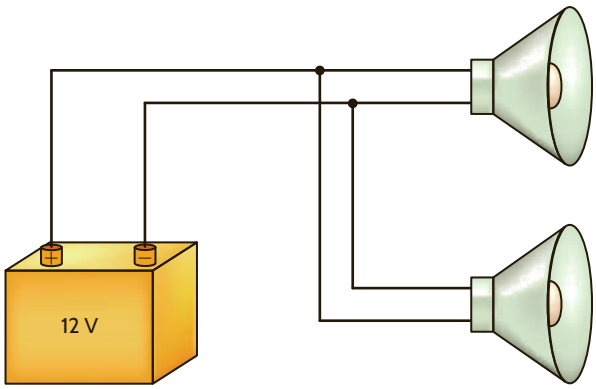

Figure P2.6

2.7 Many years ago a string of Christmas tree lights was manufactured in the form shown in Fig. P2.7a. Today the lights are manufactured as shown in Fig. P2.7b. Is there a good reason for this change?

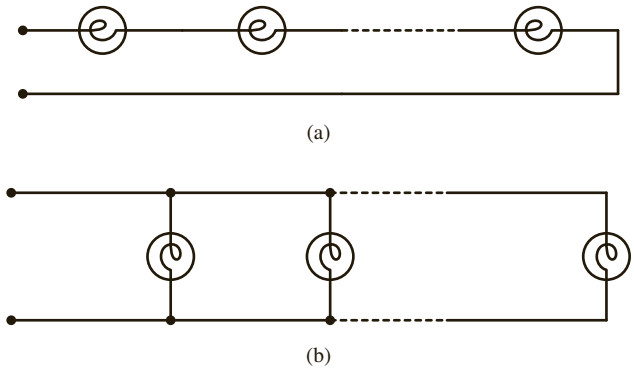

Figure P2.7

2.8 Find I_1, I_2, and I_3 in the network in Fig. P2.8.

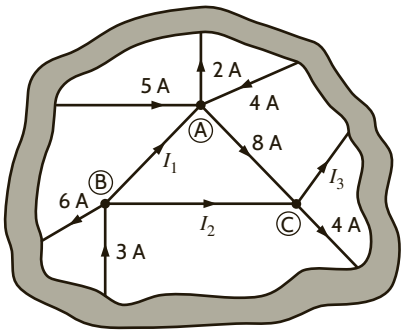

Figure P2.8

2.9 Find I_1 in the network in Fig. P2.9.

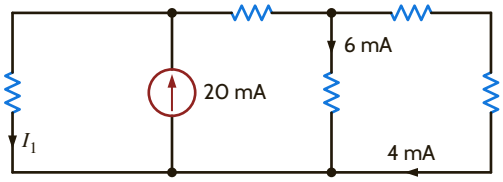

Figure P2.9

2.10 Find I_1 in the network in Fig. P2.10.

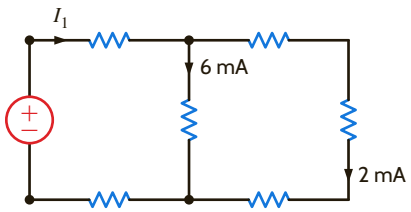

Figure P2.10

2.11 Find I_1 in the circuit in Fig. P2.11.

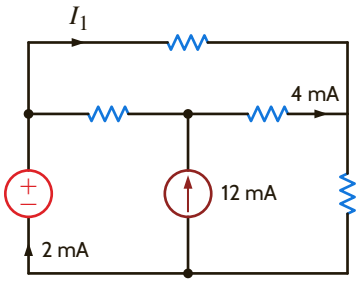

Figure P2.11

2.12 Find I_o and I_1 in the circuit in Fig. P2.12.

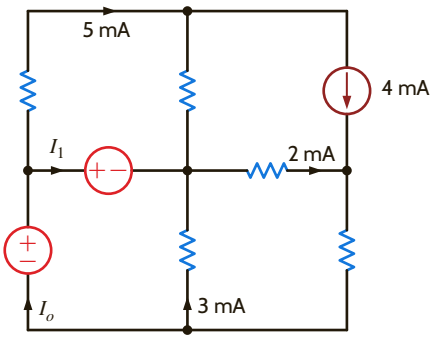

Figure P2.12

2.13 Find I_x, I_y, and I_z in the network in Fig. P2.13.

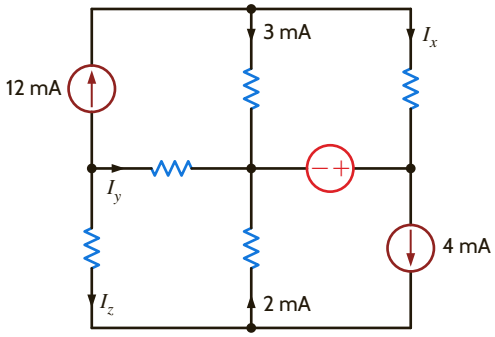

Figure P2.13

2.14 Find I_x in the circuit in Fig. P2.14.

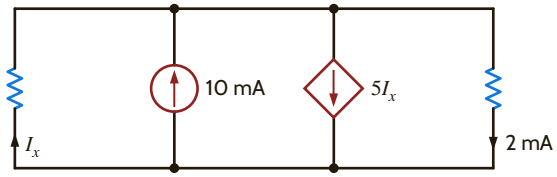

Figure P2.14

2.15 Find I_x in the network in Fig. P2.15.

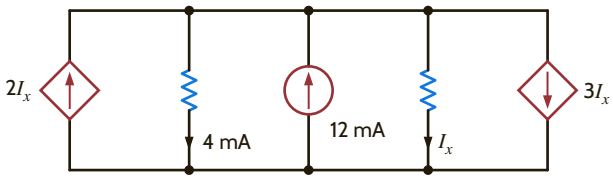

Figure P2.15

2.16 Find I_1 in the network in Fig. P2.16.

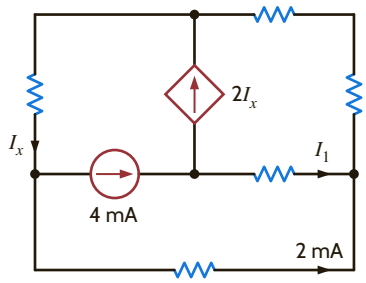

Figure P2.16

2.17 Find V_{bd} in the circuit in Fig. P2.17.

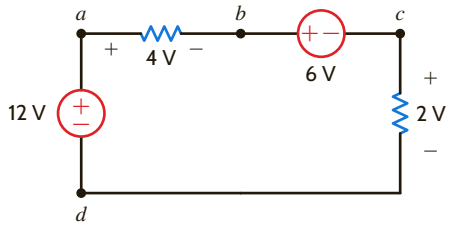

Figure P2.17

2.18 Find I_1 in the network in Fig. P2.18.

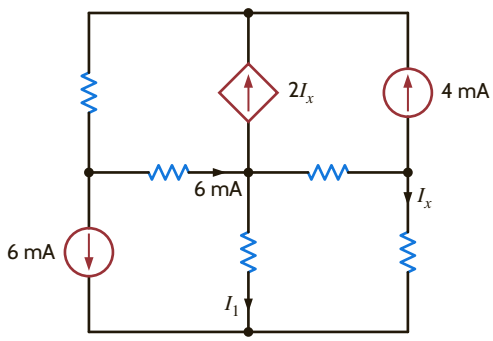

Figure P2.18

2.19 Find I_1, I_2, and I_3 in the network in Fig. P2.19.

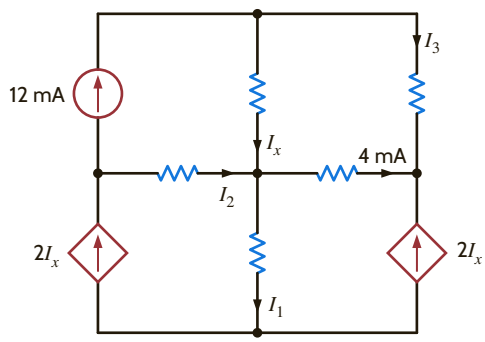

Figure P2.19

2.20 Find V_{fb} and V_{ec} in the circuit in Fig. P2.20.

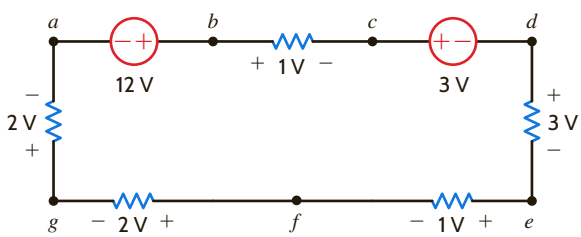

Figure P2.20

2.21 Given the circuit diagram in Fig. P2.21, find the following voltages: V_{da}, V_{bh}, V_{gc}, V_{di}, V_{fa}, V_{ac}, V_{ai}, V_{hf}, V_{fb}, and V_{dc}.

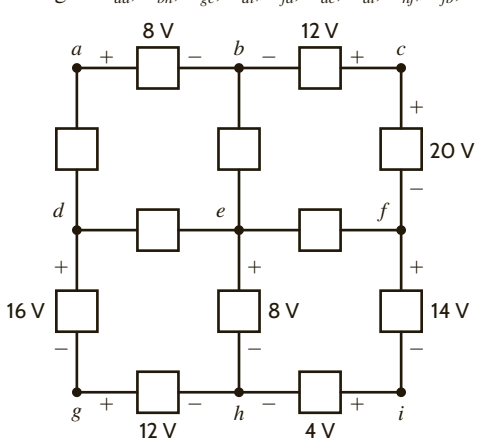

Figure P2.21

2.22 Find V_{BE} and V_{DA} in the circuit in Fig. P2.22.

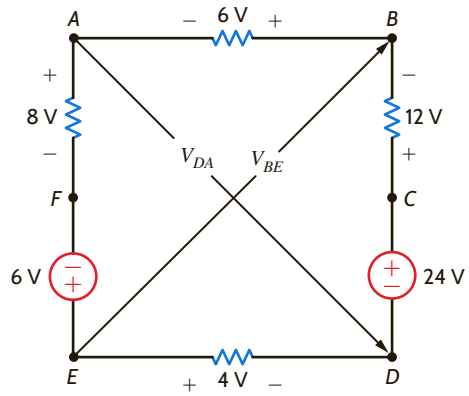

Figure P2.22

2.23 Find V_x and V_y in the circuit in Fig. P2.23.

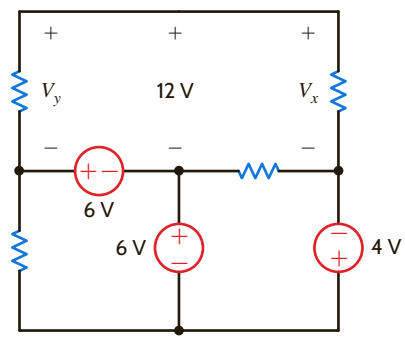

Figure P2.23

2.24 Find V_{ac} in the circuit in Fig. P2.24.

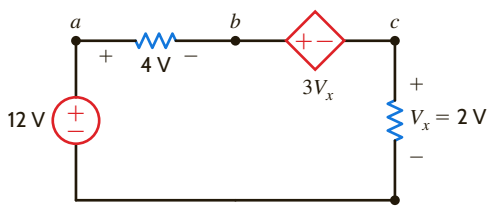

Figure P2.24

2.25 Find V_{ad} and V_{ce} in the circuit in Fig. P2.25.

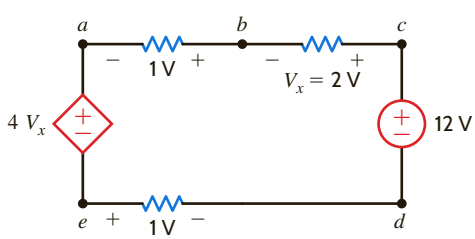

Figure P2.25

2.26 Find V_o in the circuit in Fig. P2.26.

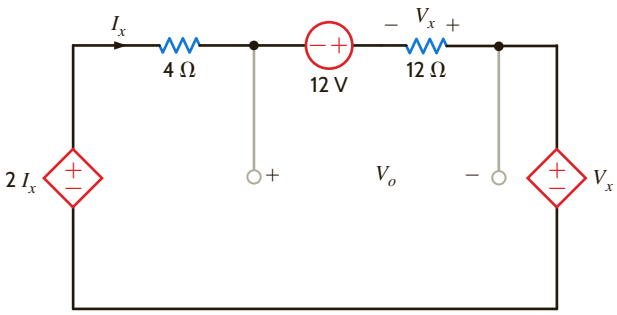

Figure P2.26

2.27 Find V_1, V_2, and V_3 in the network in Fig. P2.27.

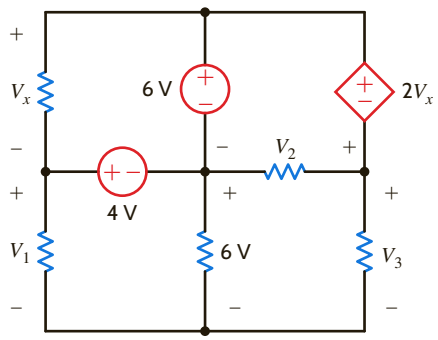

Figure P2.27

2.28 Find V_o in the network in Fig. P2.28.

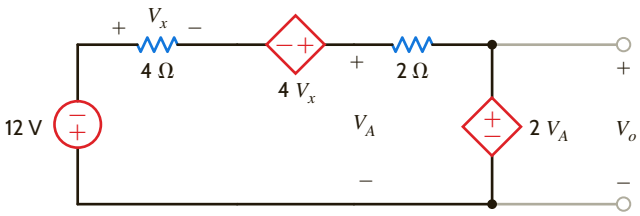

Figure P2.28

2.29 Find V_1, V_2, and V_3 in the network in Fig. P2.29.

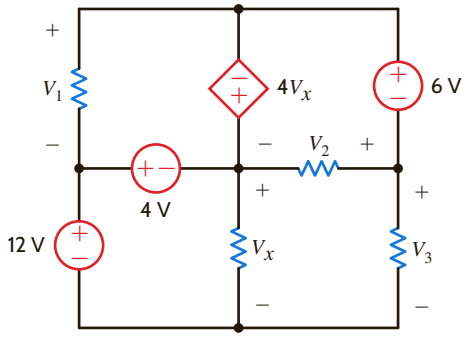

Figure P2.29

2.30 If $V_o = 3$ V in the circuit in Fig. P2.30, find V_S.

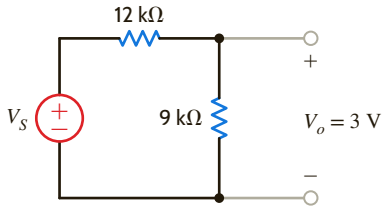

Figure P2.30

2.31 Find the power supplied by each source in the circuit in Fig. P2.31.

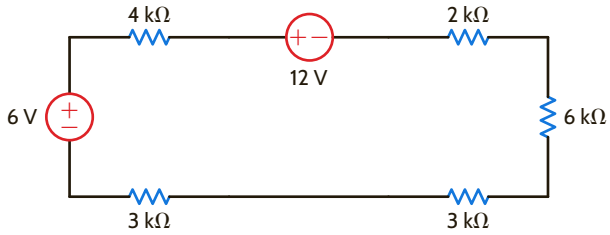

Figure P2.31

2.32 The 10-V source absorbs 2.5 mW of power. Calculate V_{ba} and the power absorbed by the dependent voltage source in Fig. P2.32.

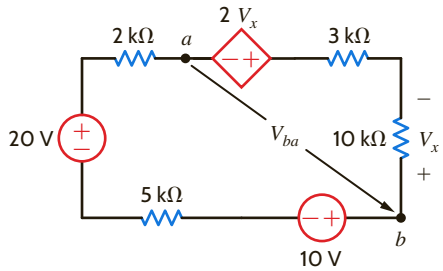

Figure P2.32

2.33 Find V_{bd} in the network in Fig. P2.33.

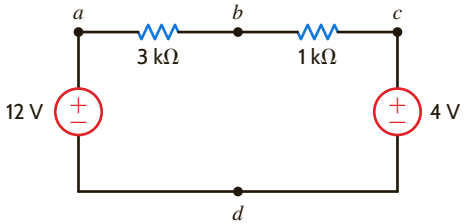

Figure P2.33

2.34 Find V_1 in the network in Fig. P2.34.

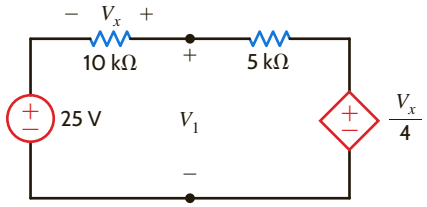

Figure P2.34

2.35 Find the power absorbed by the dependent source in the circuit in Fig. P2.35.

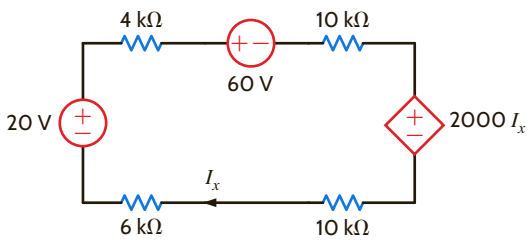

Figure P2.35

2.36 In the network in Fig. P2.36, find V_x, V_{AE}, and V_{BD} if $I = 3$ A.

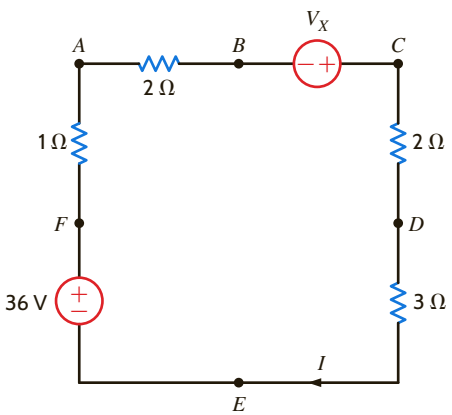

Figure P2.36

2.37 In the network in Fig. P2.37, find V_S if $V_{EB} = 6$ V.

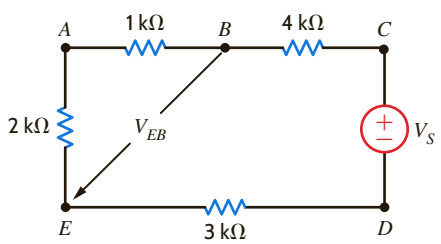

Figure P2.37

2.38 Find V_S in the circuit in Fig. P2.38, if $V_{BE} = 18$ V.

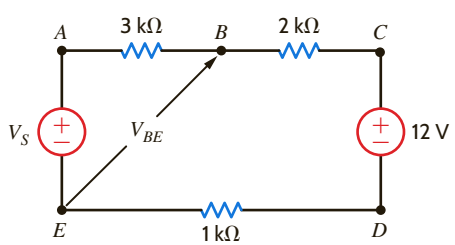

Figure P2.38

2.39 Find V_A in the network in Fig. P2.39.

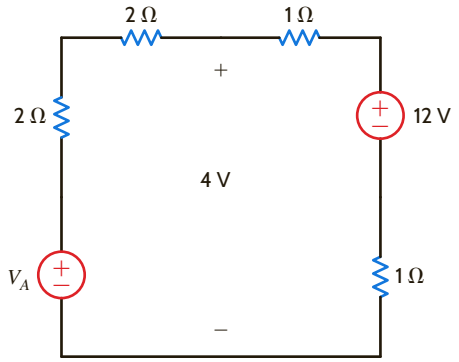

Figure P2.39

2.40 If the 12-V source in the network in Fig. P2.40 absorbs 36 W, find R and V_0.

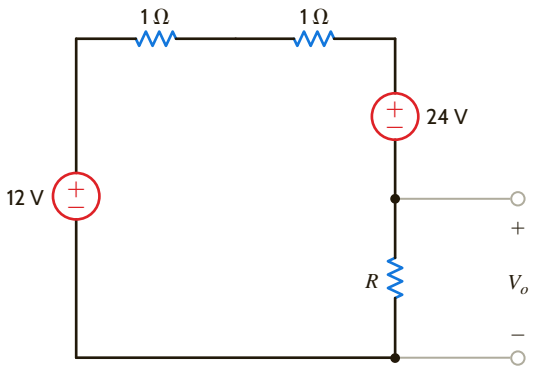

Figure P2.40

2.41 If $V_X = -12$ V in the network in Fig. P2.41, find V_S and V_{BA}.

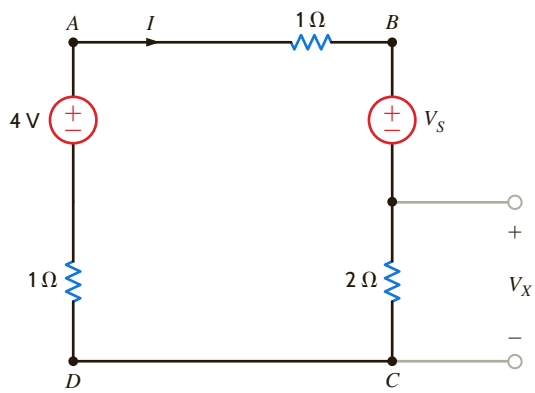

Figure P2.41

2.42 Calculate the power absorbed by the dependent source in the circuit in Fig. P2.42.

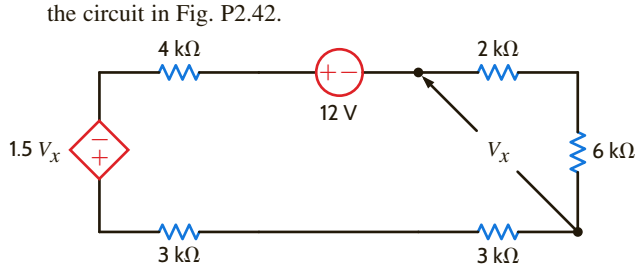

Figure P2.42

2.43 Find V_A and V_o in the circuit in Fig. P2.43.

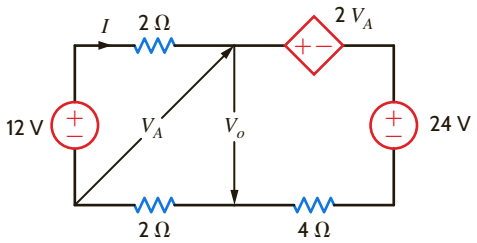

Figure P2.43

2.44 Find V_o and the power absorbed by the 2 kΩ resistor in Fig. P2.44.

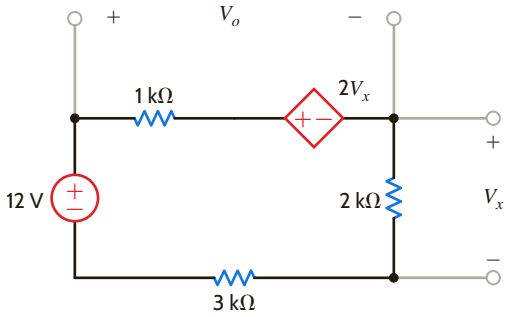

Figure P2.44

2.45 Find the power absorbed or supplied by the 12-V source in the network in Fig. P2.45.

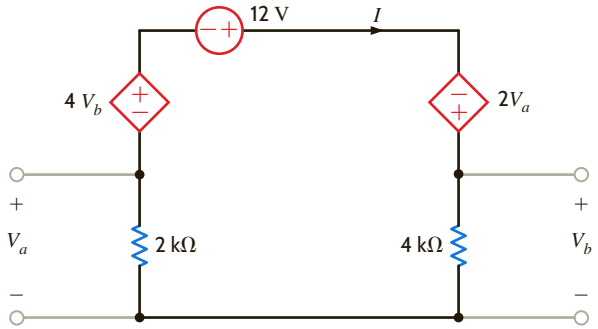

Figure P2.45

2.46 Find V_o in the circuit in Fig. P2.46.

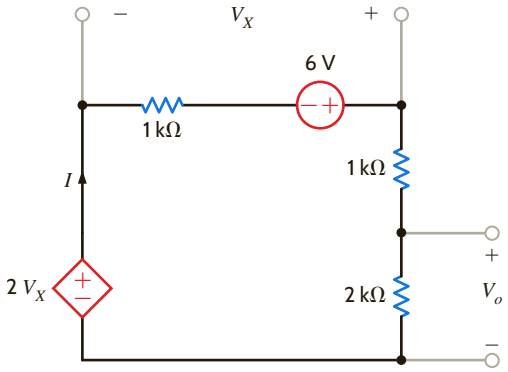

Figure P2.46

2.47 Find I_o in the network in Fig. P2.47.

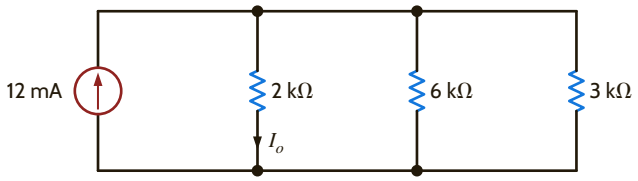

Figure P2.47

2.48 Find I_o in the network in Fig. P2.48.

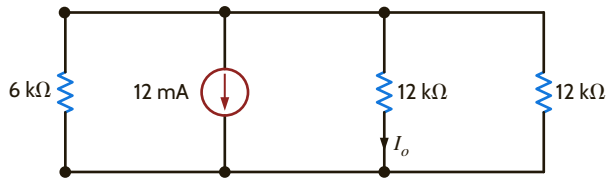

Figure P2.48

2.49 Find the power supplied by each source in the circuit in Fig. P2.49.

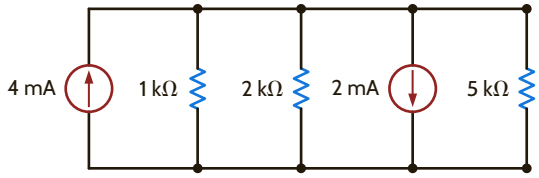

Figure P2.49

2.50 Find the current I_A in the circuit in Fig. P2.50.

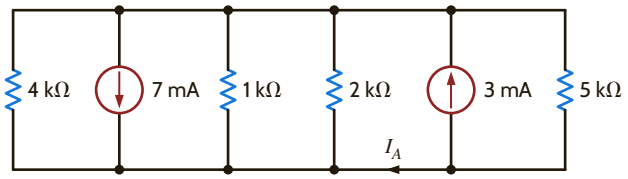

Figure P2.50

2.51 Find V_S in the network in Fig. P2.51.

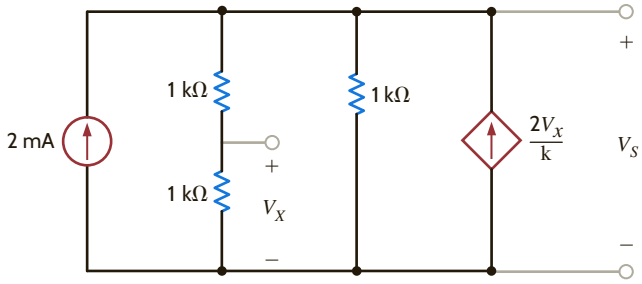

Figure P2.51

2.52 Find I_o in the circuit in Fig. P2.52.

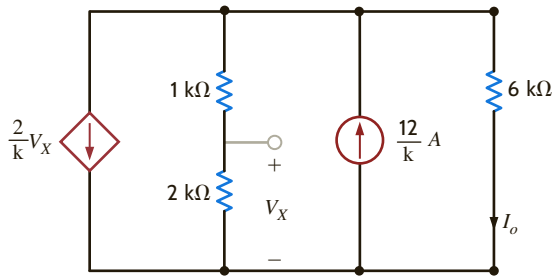

Figure P2.52

2.53 Find I_o in the network in Fig. P2.53.

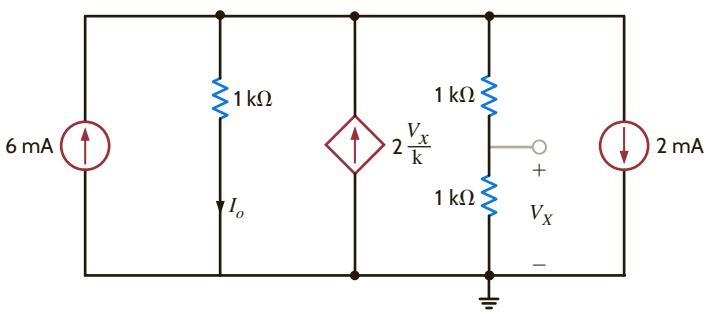

Figure P2.53

2.54 Find V_o in the circuit in Fig. P2.54.

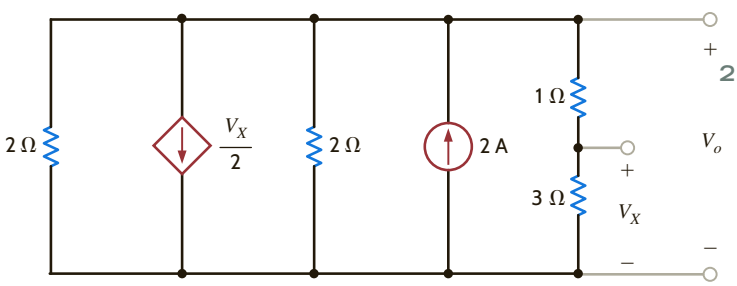

Figure P2.54

2.55 Find I_o in the network in Fig. P2.55.

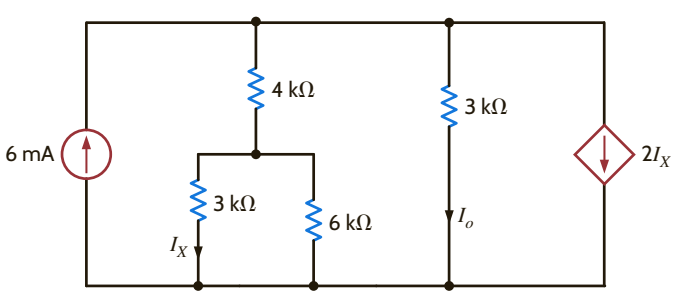

Figure P2.55

2.56 Find I_o in the network in Fig. P2.56.

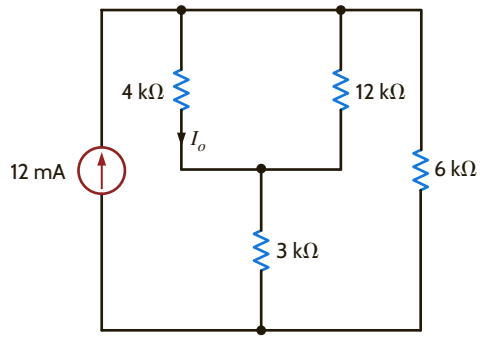

Figure P2.56

2.57 Find I_o in the network in Fig. P2.57.

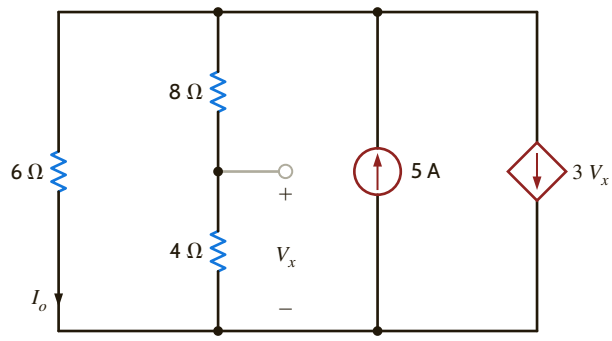

Figure P2.57

2.58 Determine I_L in the circuit in Fig. P2.58.

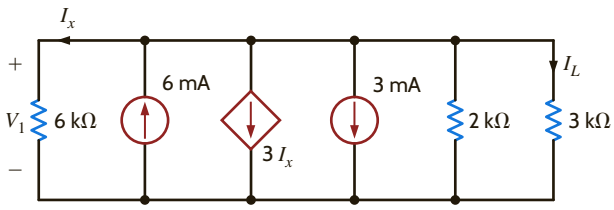

Figure P2.58

2.59 Find R_{AB} in the network in Fig. P2.59.

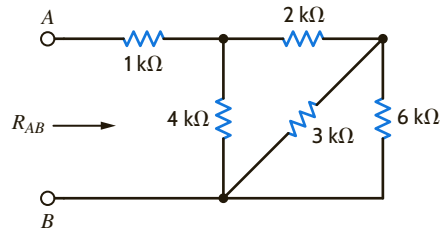

Figure P2.59

2.60 Find R_{AB} in the circuit in Fig. P2.60.

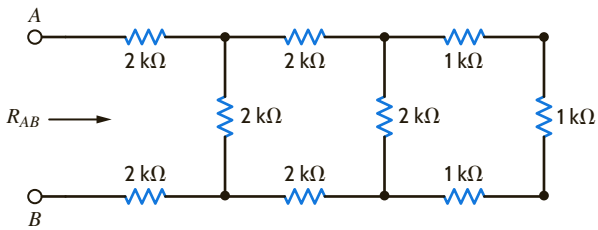

Figure P2.60

2.61 Find R_{AB} in the circuit in Fig. P2.61.

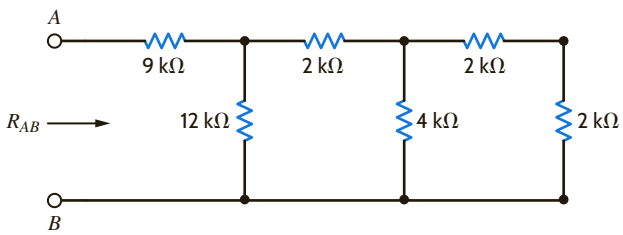

Figure P2.61

2.62 Find R_{AB} in the network in Fig. P2.62.

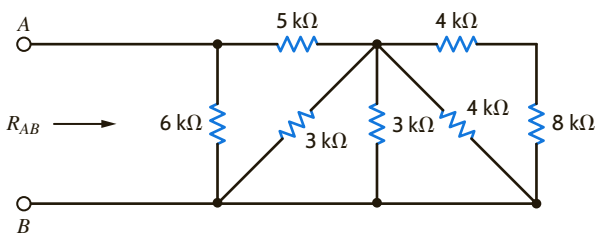

Figure P2.62

2.63 Find R_{AB} in the circuit in Fig. P2.63.

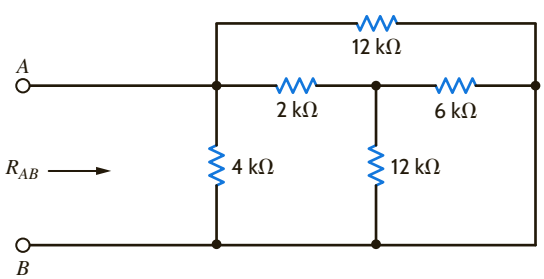

Figure P2.63

2.64 Find R_{AB} in the network in Fig. P2.64.

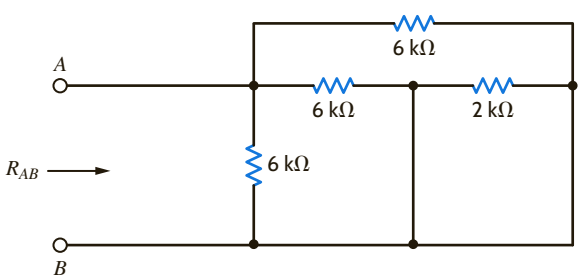

Figure P2.64

2.65 Find R_{AB} in the circuit in Fig. P2.65.

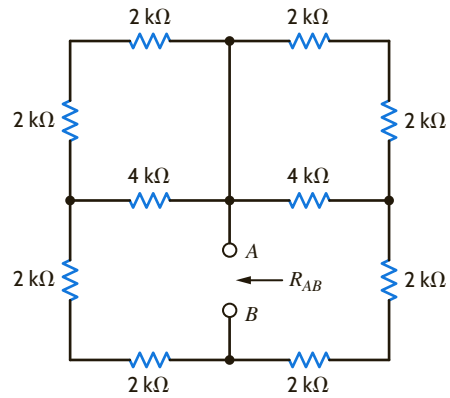

Figure P2.65

2.66 Find the equivalent resistance R_{eq} in the network in Fig. P2.66.

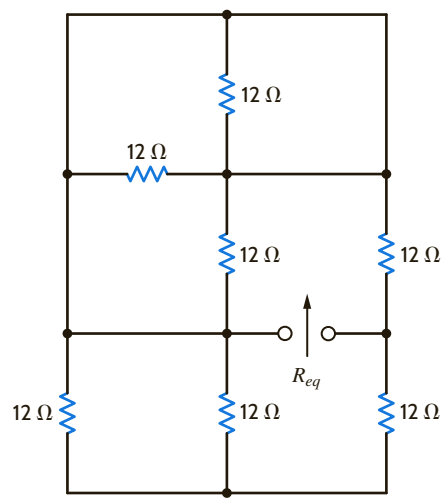

Figure P2.66

2.67 Find R_{AB} in the network in Fig. P2.67.

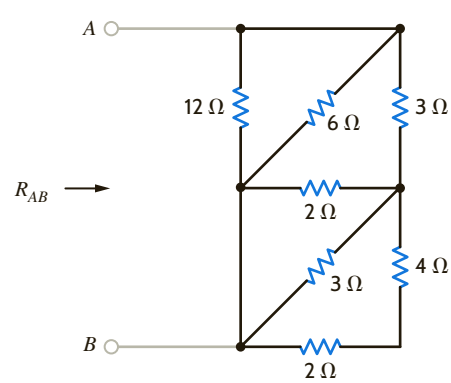

Figure P2.67

2.68 Given the resistor configuration shown in Fig. P2.68, find the equivalent resistance between the following sets of terminals: (1) a and b, (2) b and c, (3) a and c, (4) d and e, (5) a and e, (6) c and d, (7) a and d, (8) c and e, (9) b and d, and (10) b and e.

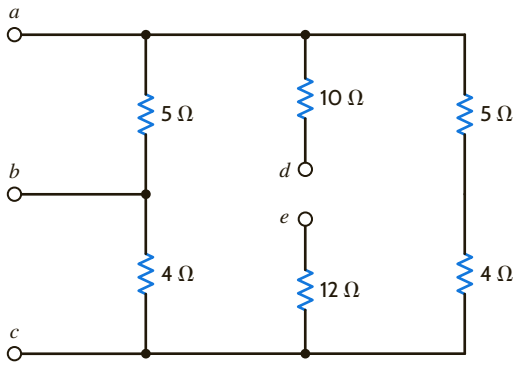

Figure P2.68

2.69 Determine the total resistance, R_T, in the circuit in Fig. P2.69.

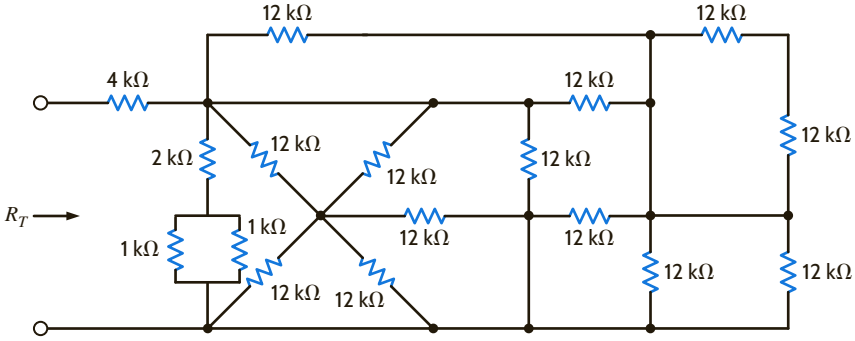

Figure P2.69

2.70 Determine the total resistance, R_T, in the circuit in Fig. P2.70.

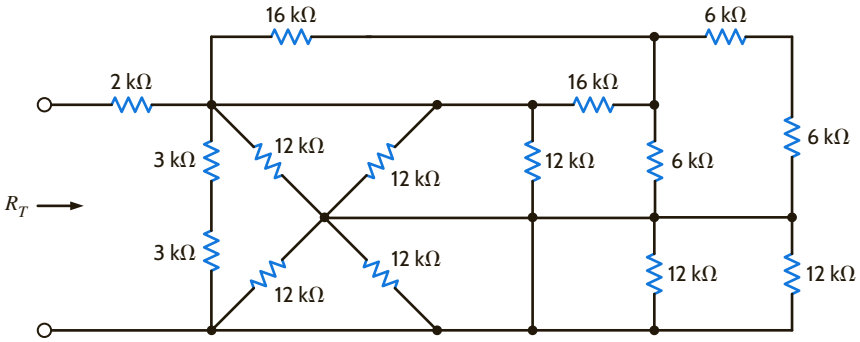

Figure P2.70

2.71 Determine the total resistance, R_T, in the circuit in Fig. P2.71.

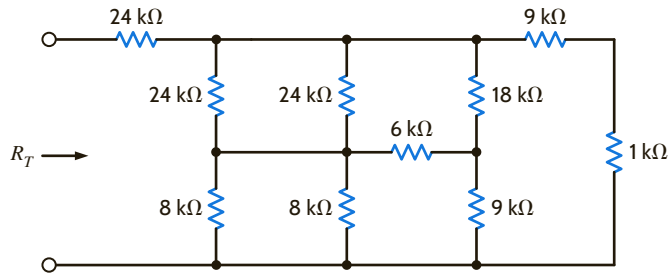

Figure P2.71

2.72 Find the power supplied by the source in the network in Fig. P2.72. All resistors are 12 kΩ.

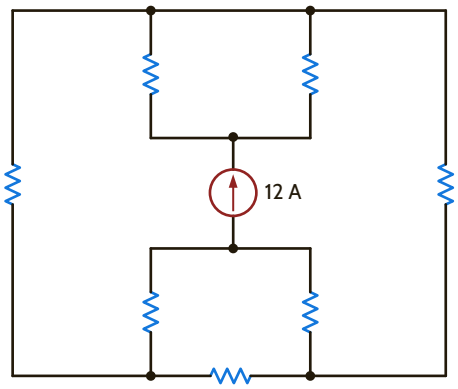

Figure P2.72

2.73 Find I_1 and V_o in the circuit in Fig. P2.73.

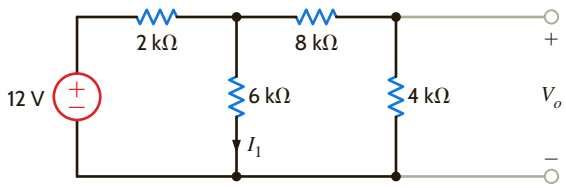

Figure P2.73

2.74 Find I_1 and V_o in the circuit in Fig. P2.74.

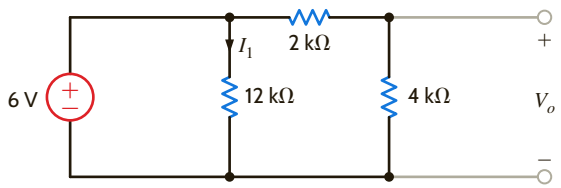

Figure P2.74

2.75 Find V_{ab} and V_{dc} in the circuit in Fig. P2.75.

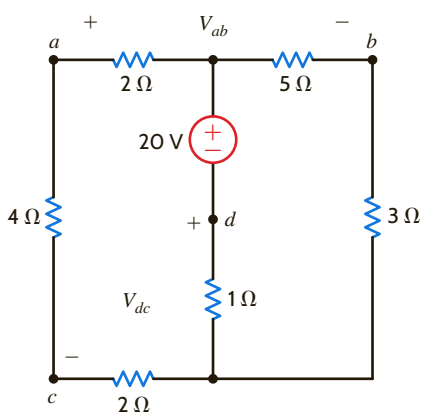

Figure P2.75

2.76 Find I_o in the network in Fig. P2.76.

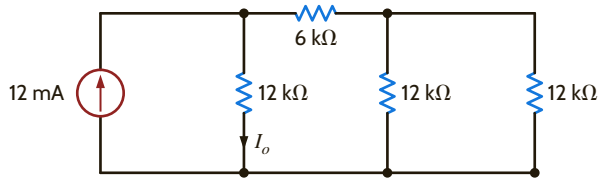

Figure P2.76

2.77 Determine I_o in the circuit in Fig. P2.77.

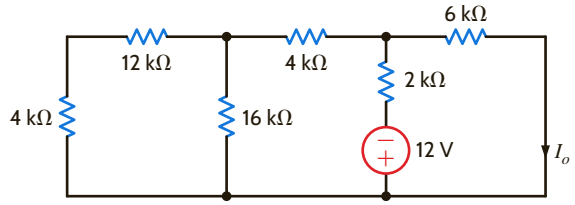

Figure P2.77

2.78 Find V_1 in the network in Fig. P2.78.

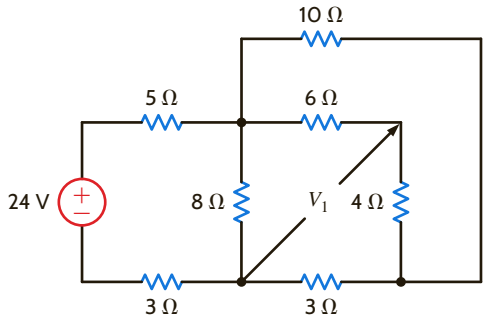

Figure P2.78

2.79 Find V_{ab} in the circuit in Fig. P2.79.

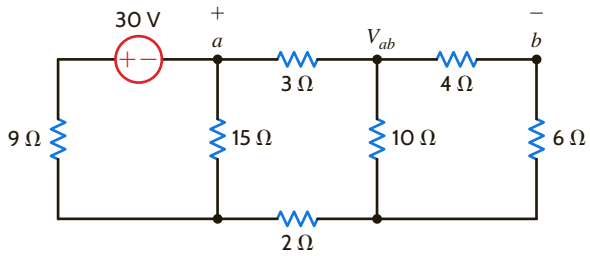

Figure P2.79

2.80 Find V_{ab} in the network in Fig. P2.80.

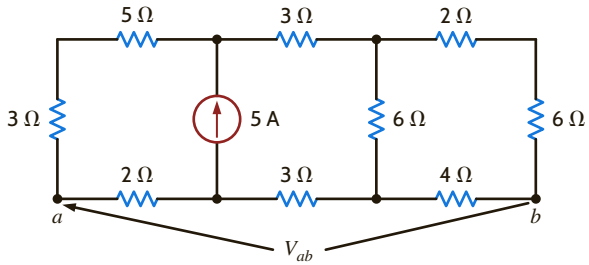

Figure P2.80

2.81 Find I_1, I_2, and V_1 in the circuit in Fig. P2.81.

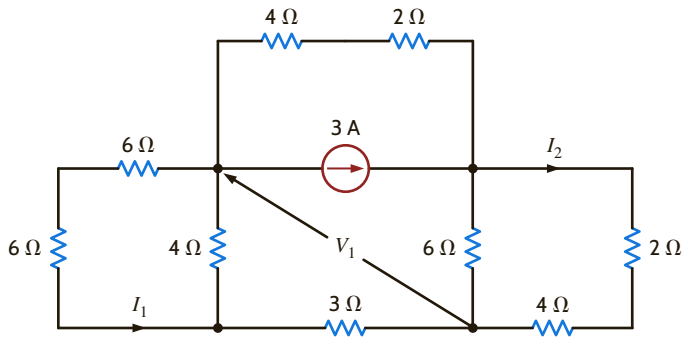

Figure P2.81

2.82 Determine V_o in the network in Fig. P2.82.

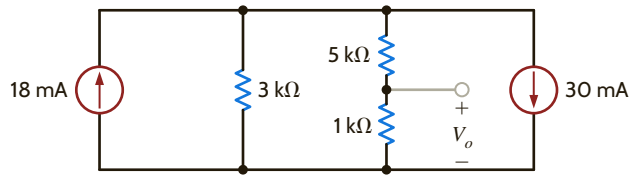

Figure P2.82

2.83 Calculate V_{AB} in Fig. P2.83.

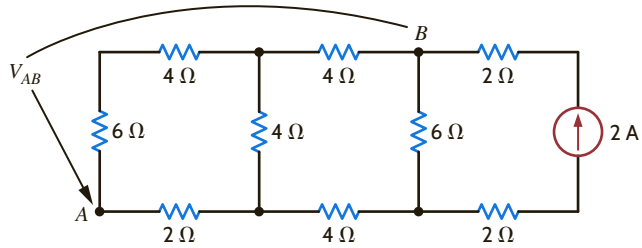

Figure P2.83

2.84 Find I_o in the network in Fig. P2.84 if all resistors are 6 Ω.

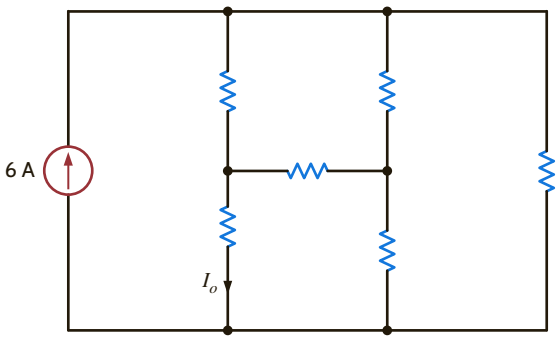

Figure P2.84

2.85 Find I_o in the circuit in Fig. P2.85.

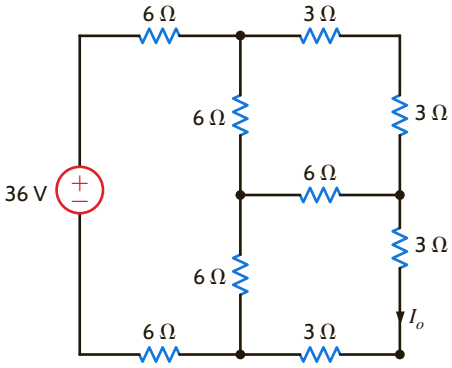

Figure P2.85

2.86 Determine the power supplied by the 36-V source in the circuit in Fig. P2.86.

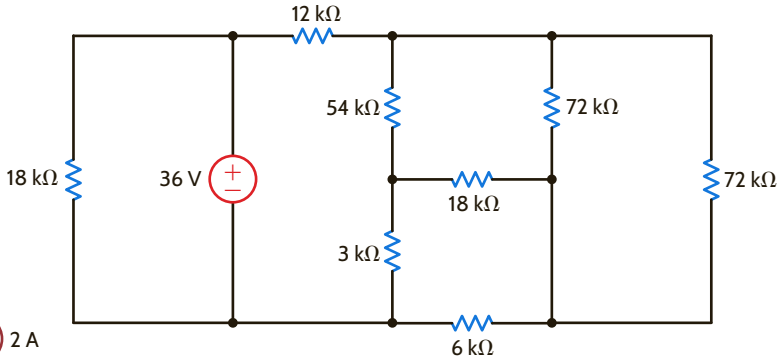

Figure P2.86

2.87 Find the power supplied by the current source in the network in Fig. P2.87. All resistors are 12 Ω.

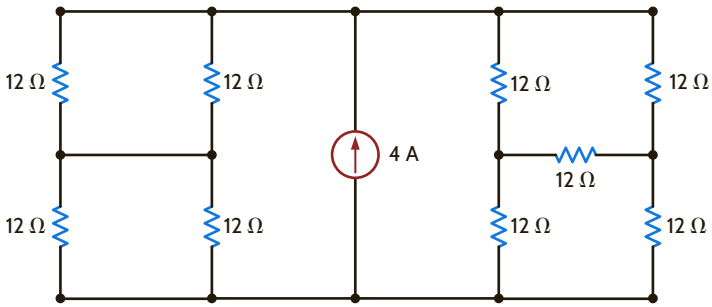

Figure P2.87

2.88 In the network in Fig. P2.88, $V_1 = 12$ V. Find V_S.

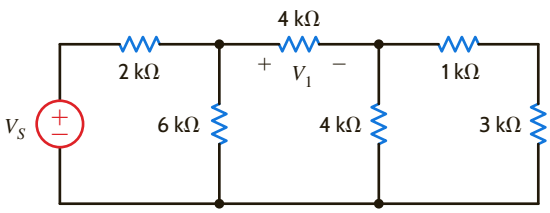

Figure P2.88

2.89 In the circuit in Fig. P2.89, $V_o = 2$ V. Find I_S.

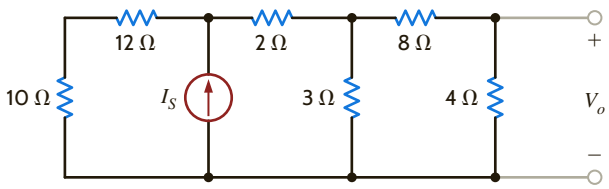

Figure P2.89

2.90 In the network in Fig. P2.90, $V_1 = -14$ V. Find V_S.

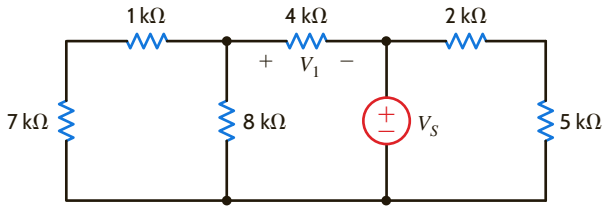

Figure P2.90

2.91 If $V_R = 15$ V, find V_x in Fig. P2.91.

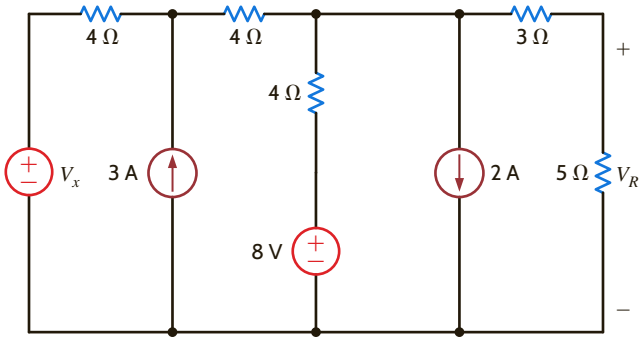

Figure P2.91

2.92 Find the value of I_A in the network in Fig. P2.92.

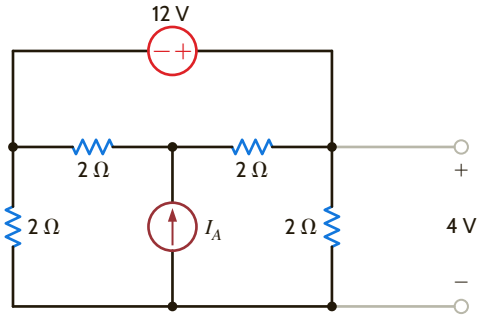

Figure P2.92

2.93 If $V_1 = 5$ V in the circuit in Fig. P2.93, find I_S.

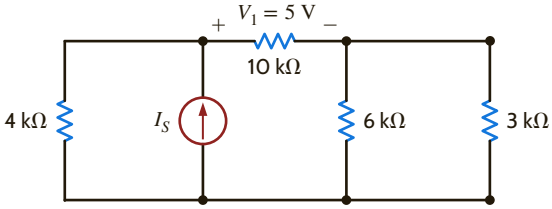

Figure P2.93

2.94 Given that $V_o = 4$ V in the network in Fig. P2.94, find V_S.

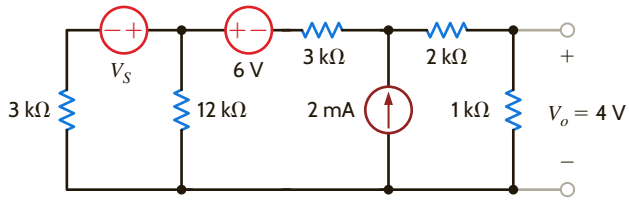

Figure P2.94

2.95 Find the value of V_S in the network in Fig. P2.95 such that the power supplied by the current source is 0.

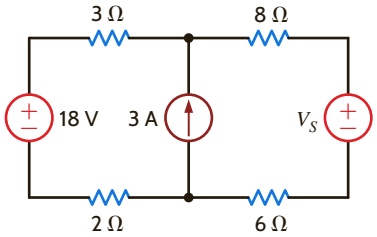

Figure P2.95

2.96 In the network in Fig. P2.96, $V_o = 6$ V. Find I_S.

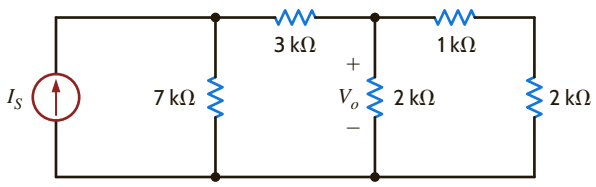

Figure P2.96

2.97 Find the value of V_1 in the network in Fig. P2.97 such that $V_a = 0$.

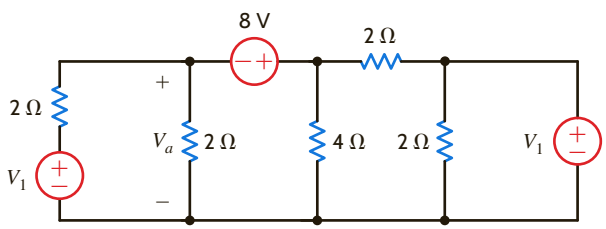

Figure P2.97

2.98 Find the value of I_A in the circuit in Fig. P2.98.

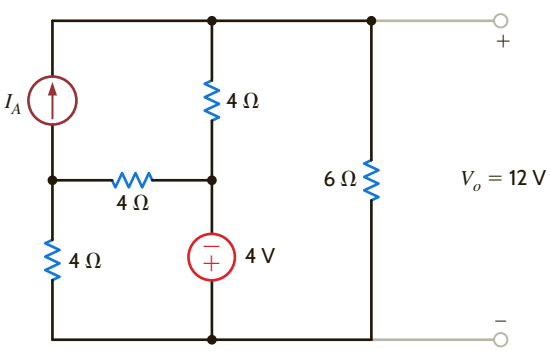

Figure P2.98

2.99 If the power supplied by the 2-A current source is 40 W, find V_S and the power absorbed by the 5-V source in the network in Fig. P2.99.

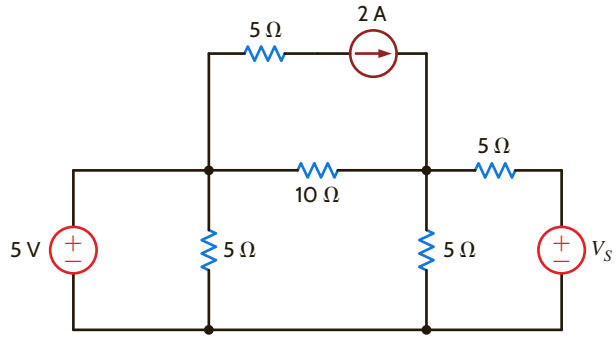

Figure P2.99

2.100 The 40-V source in the circuit in Fig. P2.100 is absorbing 80 W of power. Find V_x.

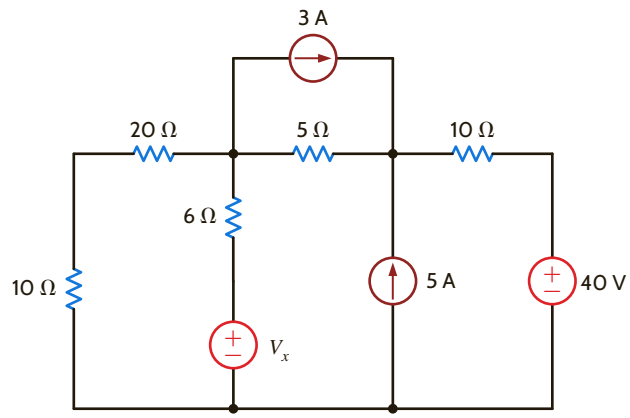

Figure P2.100

2.101 Find the value of the current source I_A in the network in Fig. P2.101.

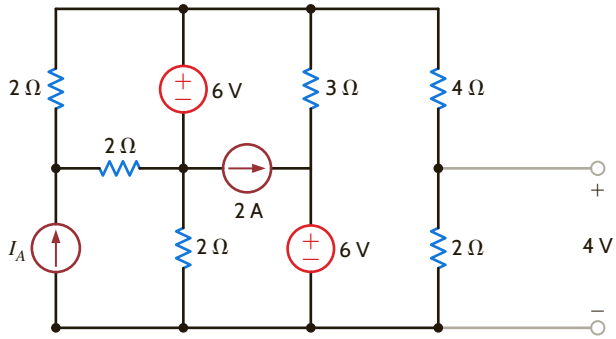

Figure P2.101

2.102 Given $I_o = 2$ mA in the network in Fig. P2.102, find V_A.

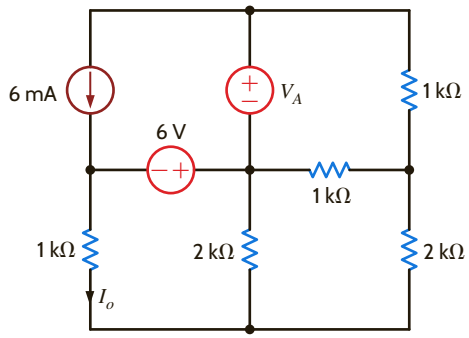

Figure P2.102

2.103 Find the value of V_x in the network in Fig. P2.103, such that the 5-A current source supplies 50 W.

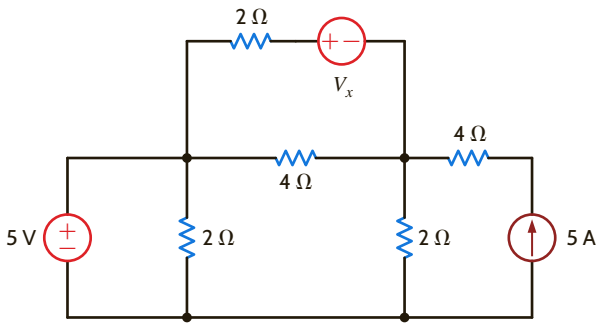

Figure P2.103

2.104 Given $I_o = 2$ mA in the circuit in Fig. P2.104, find I_A.

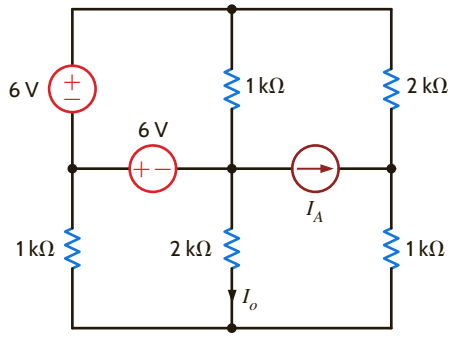

Figure P2.104

2.105 Given V_o in the network in Fig. P2.105, find I_A.

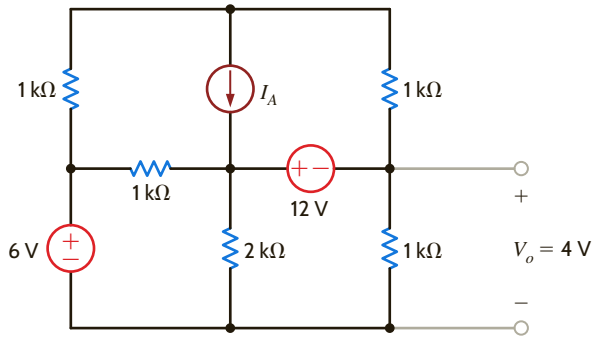

Figure P2.105

2.106 Find the value of V_x in the circuit in Fig. P2.106 such that the power supplied by the 5-A source is 60 W.

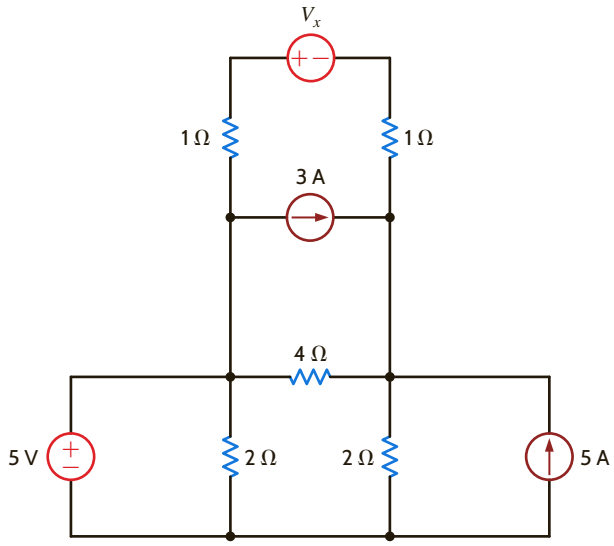

Figure P2.106

2.107 Find the power absorbed by the network in Fig. P2.107.

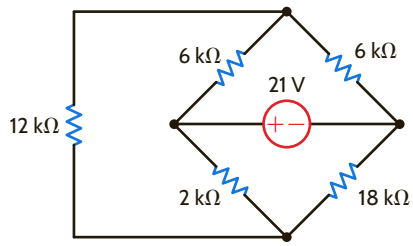

Figure P2.107

2.108 Find the value of g in the network in Fig. P2.108 such that the power supplied by the 3-A source is 20 W.

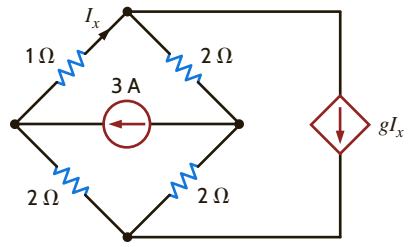

Figure P2.108

2.109 Find the power supplied by the 24-V source in the circuit in Fig. P2.109.

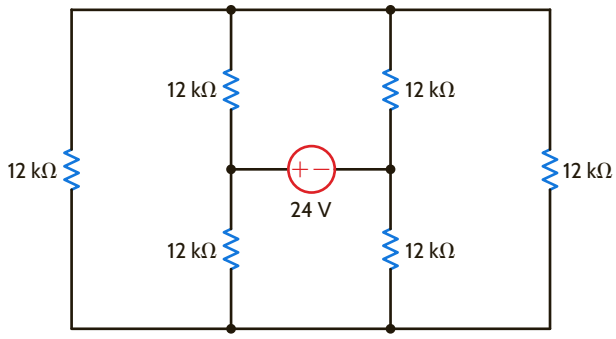

Figure P2.109

2.110 Find I_o in the circuit in Fig. P2.110.

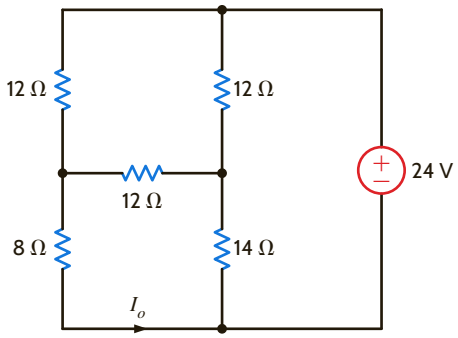

Figure P2.110

2.111 Find I_o in the circuit in Fig. P2.111.

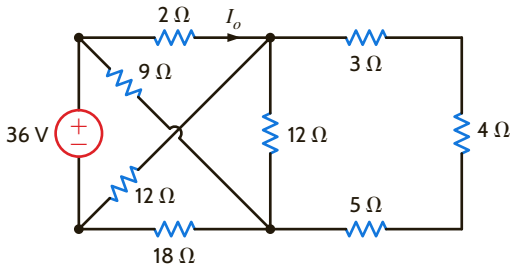

Figure P2.111

2.112 Determine the value of V_o in the network in Fig. P2.112.

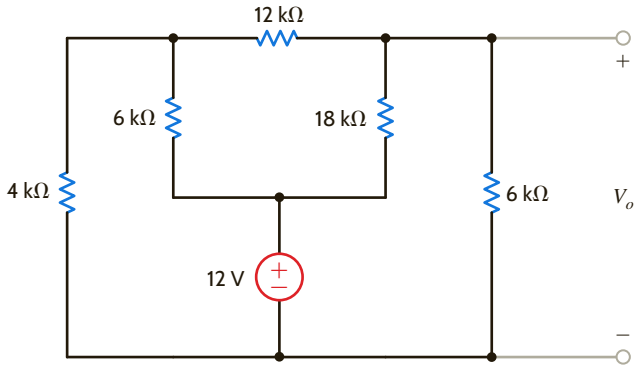

Figure P2.112

2.113 If V_o in the circuit in Fig. P2.113 is 24 V, find the value of I_S.

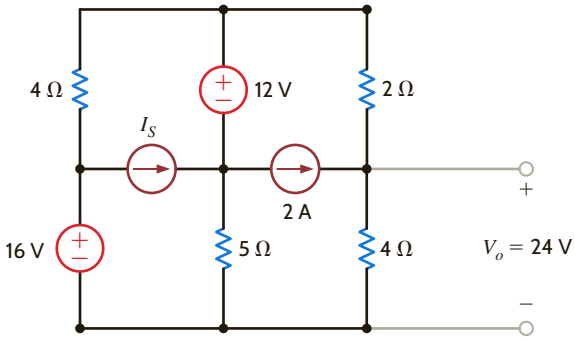

Figure P2.113

2.114 Find the value of V_S in the network in Fig. P2.114.

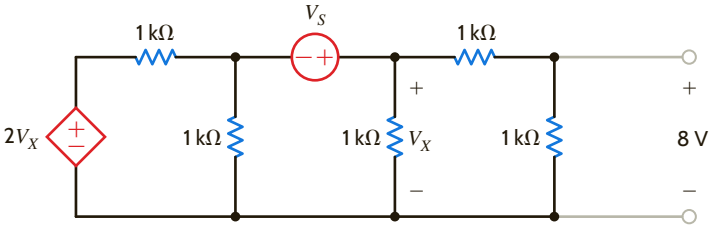

Figure P2.114

2.115 Find the power supplied by the 6-mA source in the network in Fig. P2.115.

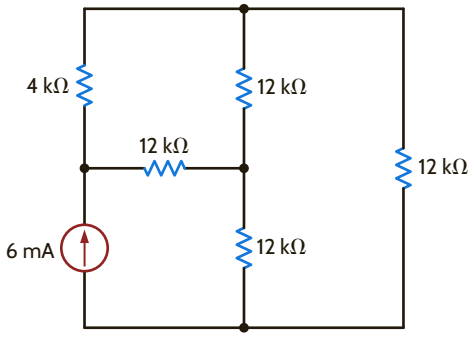

Figure P2.115

2.116 Find V_o in the circuit in Fig. P2.116.

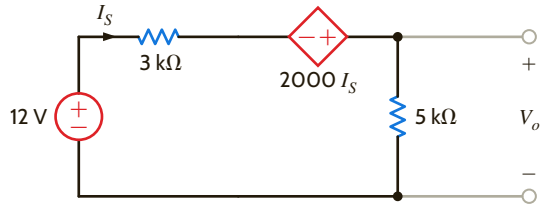

Figure P2.116

2.117 Find V_o in the network in Fig. P2.117.

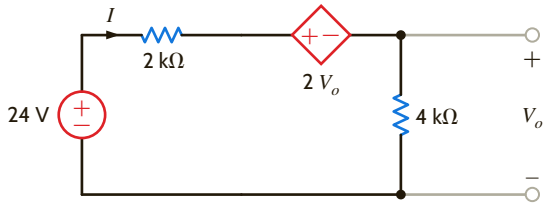

Figure P2.117

2.118 Find I_1 in the network in Fig. P2.118.

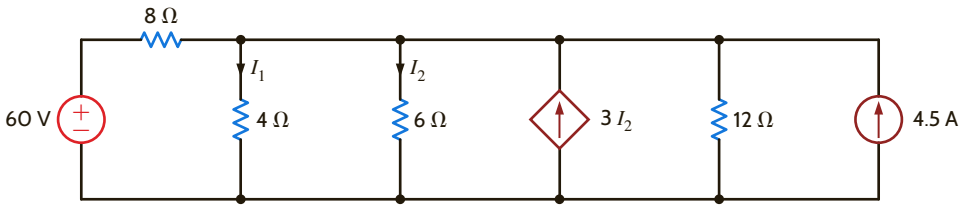

Figure P2.118

2.119 A single-stage transistor amplifier is modeled as shown in Fig. P2.119. Find the current in the load R_L.

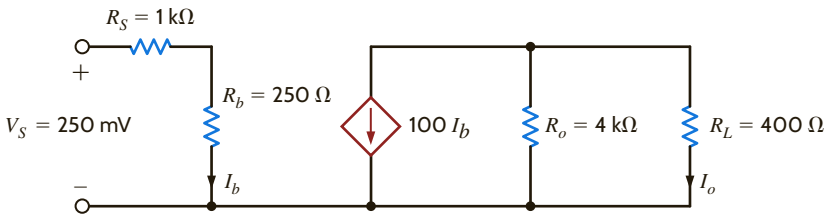

Figure P2.119

2.120 Find I_o in the circuit in Fig. P2.120.

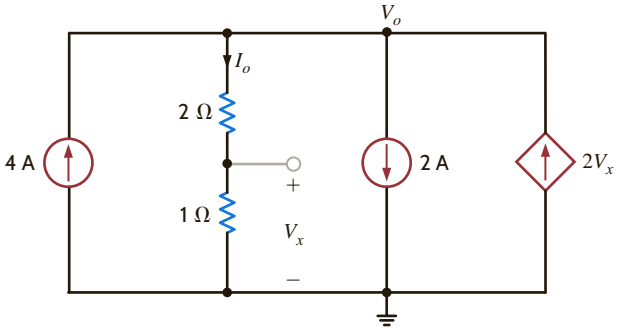

Figure P2.120

2.121 Find V_o in the circuit in Fig. P2.121.

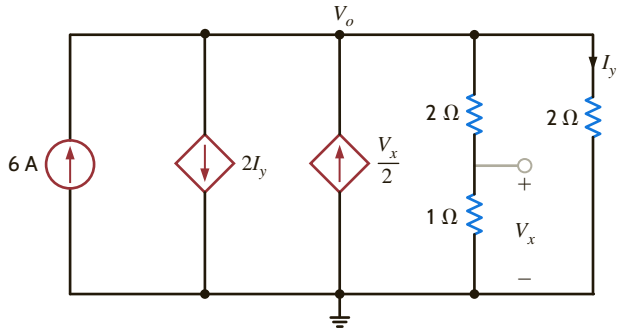

Figure P2.121

2.122 A typical transistor amplifier is shown in Fig. P2.122. Find the amplifier gain G (i.e., the ratio of the output voltage to the input voltage).

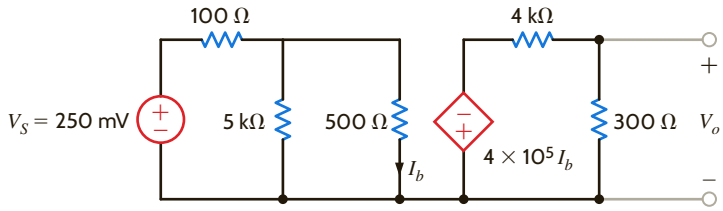

Figure P2.122

2.123 Find V_x in the network in Fig. P2.123.

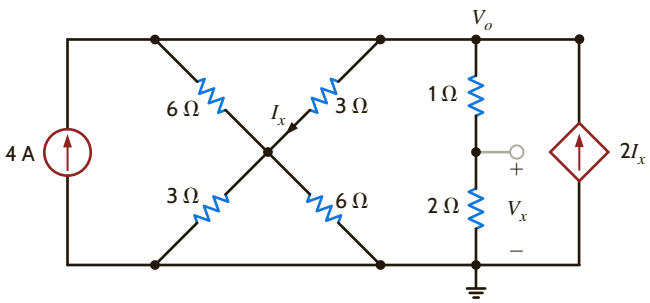

Figure P2.123

2.124 Find V_o in the network in Fig. P2.124.

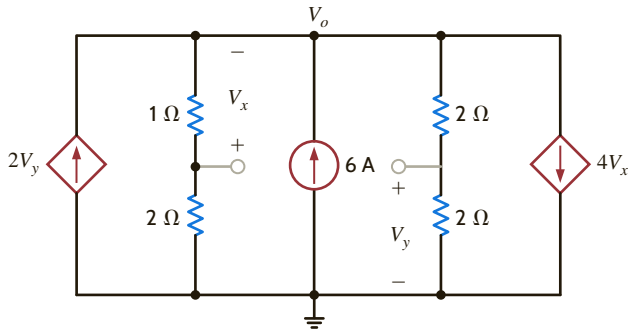

Figure P2.124

2.125 Find I_1, I_2, and I_3 in the circuit in Fig. P2.125.

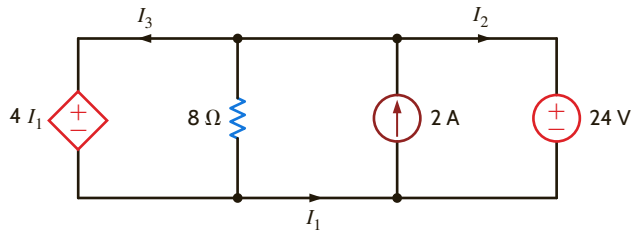

Figure P2.125

2.126 Find I_o in the network in Fig. P2.126.

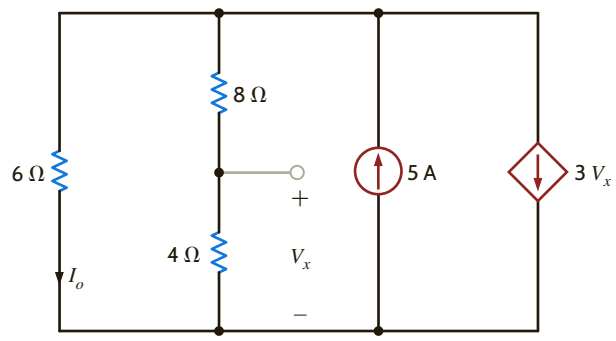

Figure P2.126

2.127 Find the power absorbed by the 12-kΩ resistor on the right side of the network in Fig. P2.127.

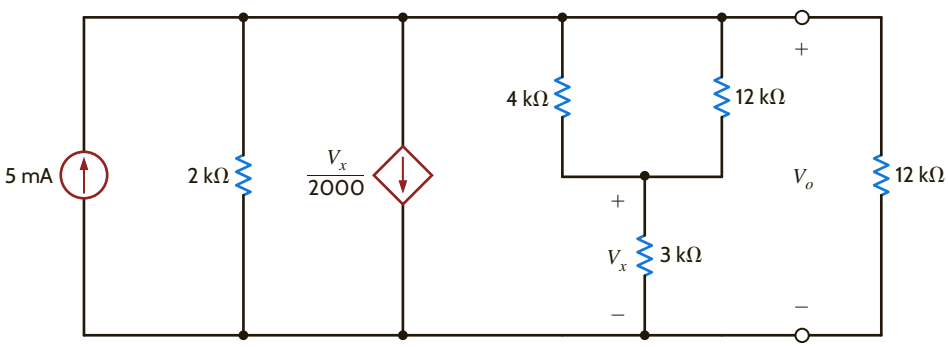

Figure P2.127

2.128 Find the power absorbed by the 12-kΩ resistor in the network in Fig. P2.128.

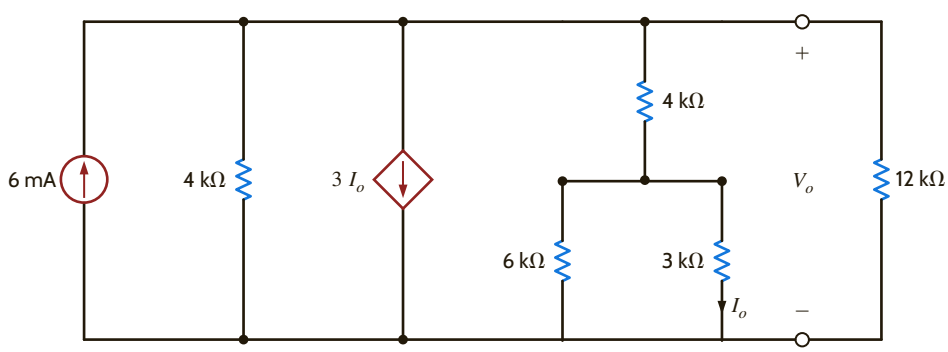

Figure P2.128

2.129 Find the value of k in the network in Fig. P2.129 such that the power supplied by the 6-A source is 108 W.

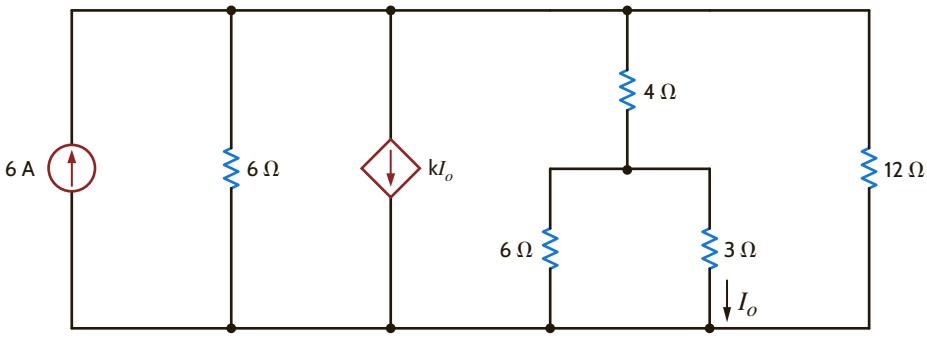

Figure P2.129

2.130 If the power absorbed by the 10-V source in Fig. P2.130 is 40 W, calculate I_S.

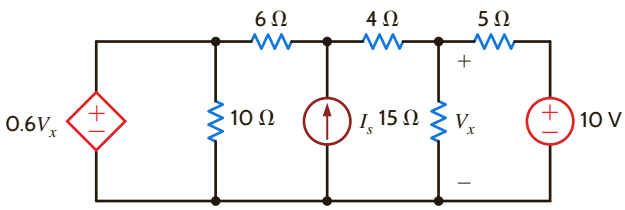

Figure P2.130

2.131 If the power supplied by the 2-A current source in Fig. P2.131 is 50 W, calculate k.

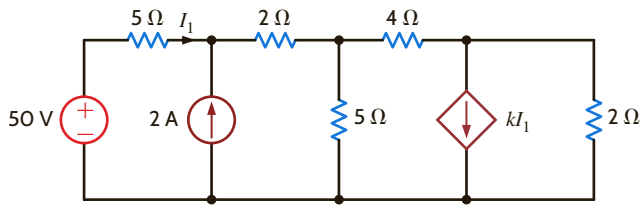

Figure P2.131

TYPICAL PROBLEMS FOUND ON THE FE EXAM

2FE-1 What is the power generated by the source in the network in Fig. 2PFE-1?

a. 2.8 W **c.** 3.6 W
b. 1.2 W **d.** 2.4 W

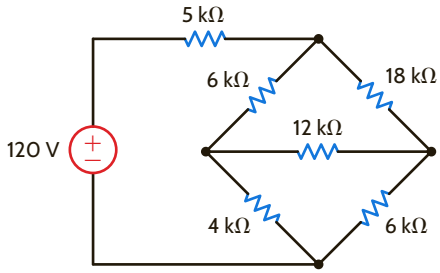

Figure 2PFE-1

2FE-2 Find V_{ab} in the circuit in Fig. 2PFE-2.

a. −5 V **c.** 15 V
b. 10 V **d.** −10 V

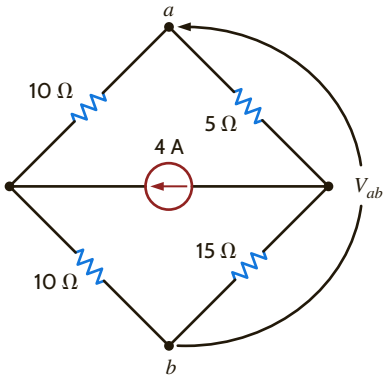

Figure 2PFE-2

2FE-3 If $R_{eq} = 10.8\ \Omega$ in the circuit in Fig. 2PFE-3, what is R_2?

a. 12 Ω **c.** 8 Ω
b. 20 Ω **d.** 18 Ω

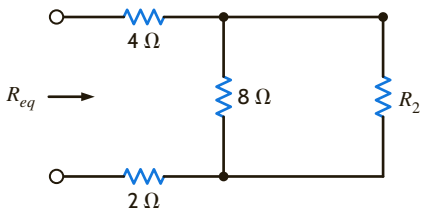

Figure 2PFE-3

2FE-4 Find the equivalent resistance of the circuit in Fig. 2PFE-4 at the terminals *A*-*B*.

a. 4 kΩ **c.** 8 kΩ
b. 12 kΩ **d.** 20 kΩ

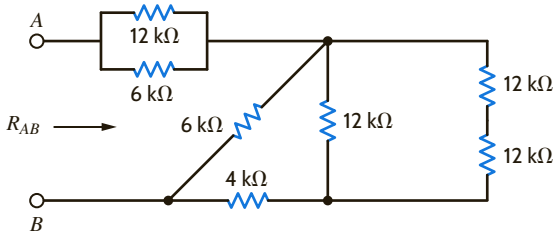

Figure 2PFE-4

2FE-5 The 100-V source is absorbing 50 W of power in the network in Fig. 2PFE-5. What is *R*?

a. 17.27 Ω **c.** 19.25 Ω
b. 9.42 Ω **d.** 15.12 Ω

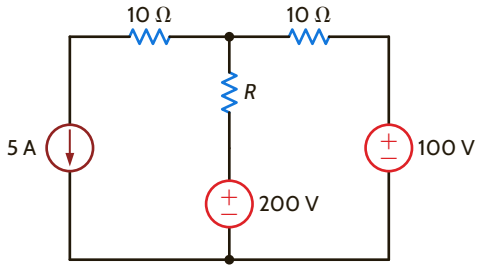

Figure 2PFE-5

2FE-6 Find the power supplied by the 40-V source in the circuit in Fig. 2PFE-6.

a. 120 W **c.** 212 W
b. 232 W **d.** 184 W

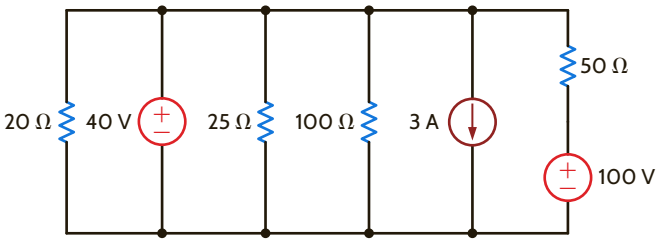

Figure 2PFE-6

2FE-7 What is the current I_o in the circuit in Fig. 2PFE-7?

a. 0.84 mA **c.** 2.75 mA
b. −1.25 mA **d.** −0.22 mA

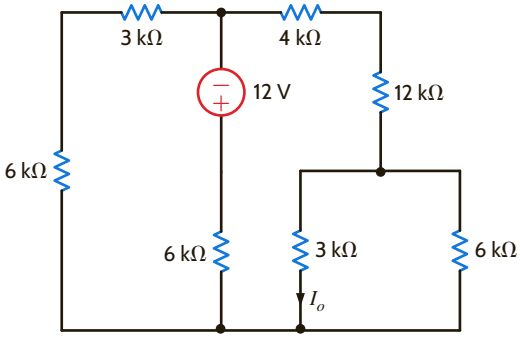

Figure 2PFE-7

2FE-8 Find the voltage V_o in the network in Fig. 2PFE-8.

a. 24 V **c.** 36 V
b. 10 V **d.** 12 V

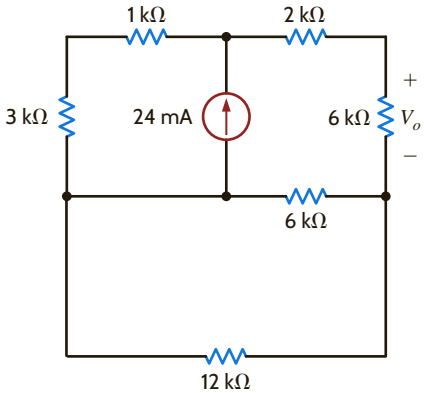

Figure 2PFE-8

2FE-9 What is the voltage V_o in the circuit in Fig. 2PFE-9?

a. 2 V **c.** 5 V

b. 8 V **d.** 12 V

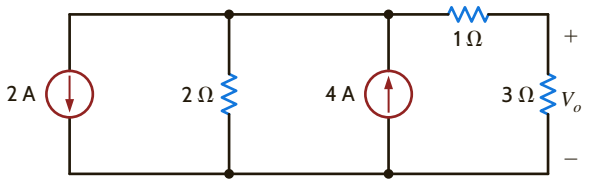

Figure 2PFE-9

2FE-10 Find the current I_x in Fig. 2PFE-10.

a. 1/2 A **c.** 3/2 A

b. 5/3 A **d.** 8/3 A

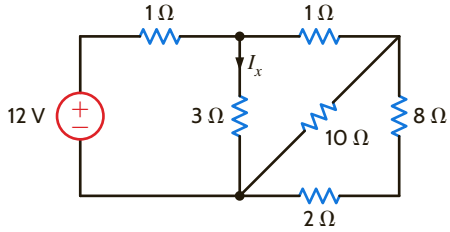

Figure 2PFE-10

Chapter Three

THE LEARNING GOALS FOR THIS CHAPTER ARE THAT STUDENTS SHOULD BE ABLE TO:

- Calculate the branch currents and node voltages in circuits containing multiple nodes using KCL and Ohm's law in nodal analysis.
- Calculate the mesh currents and voltage drops and rises in circuits containing multiple loops using KVL and Ohm's law in loop analysis.
- Identify the most appropriate analysis technique that should be utilized to solve a particular problem.

NODAL AND LOOP ANALYSIS TECHNIQUES

EXPERIMENTS THAT HELP STUDENTS DEVELOP AN UNDERSTANDING OF LOOP AND NODAL TECHNIQUES FOR CIRCUIT ANALYSIS ARE:

- Kirchhoff's Laws: Prove Kirchhoff's laws experimentally and the conservation of power from voltage and current measurements in simple circuits.
- Mesh Current and Node Voltage Analyses: Build and analyze a circuit using mesh current or node voltage analysis and examine the effect of multiple sources on a circuit parameter by accumulating the results of the individual sources using superposition.
- Wheatstone Bridge: Predict the temperature using a Wheatstone bridge with a thermistor as the element in one leg of the bridge.

3.1 Nodal Analysis

In a nodal analysis, the variables in the circuit are selected to be the node voltages. The node voltages are defined with respect to a common point in the circuit. One node is selected as the reference node, and all other node voltages are defined with respect to that node. Quite often, this node is the one to which the largest number of branches are connected. It is commonly called *ground* because it is said to be at ground-zero potential, and it sometimes represents the chassis or ground line in a practical circuit.

We will select our variables as being positive with respect to the reference node. If one or more of the node voltages are actually negative with respect to the reference node, the analysis will indicate it.

In order to understand the value of knowing all the node voltages in a network, we consider once again the network in Fig. 2.32, which is redrawn in **Fig. 3.1**. The voltages, V_S, V_a, V_b, and V_c, are all measured with respect to the bottom node, which is selected as the reference and labeled with the ground symbol ⏚. Therefore, the voltage at node 1 is $V_S = 12$ V with respect to the reference node 5, the voltage at node 2 is $V_a = 3$ V with respect to the reference node 5, and so on. Now note carefully that once these node voltages are known, we can immediately calculate any branch current or the power supplied or absorbed by any element, since we know the voltage across every element in the network. For example, the voltage V_1 across the leftmost 9-kΩ resistor is the difference in potential between the two ends of the resistor; that is,

$$\begin{aligned} V_1 &= V_S - V_a \\ &= 12 - 3 \\ &= 9 \text{ V} \end{aligned}$$

This equation is really nothing more than an application of KVL around the leftmost loop; that is,

$$-V_S + V_1 + V_a = 0$$

In a similar manner, we find that

$$V_3 = V_a - V_b$$

and

$$V_5 = V_b - V_c$$

Then the currents in the resistors are

$$\begin{aligned} I_1 &= \frac{V_1}{9\text{k}} = \frac{V_S - V_a}{9\text{k}} \\ I_3 &= \frac{V_3}{3\text{k}} = \frac{V_a - V_b}{3\text{k}} \\ I_5 &= \frac{V_5}{9\text{k}} = \frac{V_b - V_c}{9\text{k}} \end{aligned}$$

In addition,

$$\begin{aligned} I_2 &= \frac{V_a - 0}{6\text{k}} \\ I_4 &= \frac{V_b - 0}{4\text{k}} \end{aligned}$$

since the reference node 5 is at zero potential.

Figure 3.1

Circuit with known node voltages.

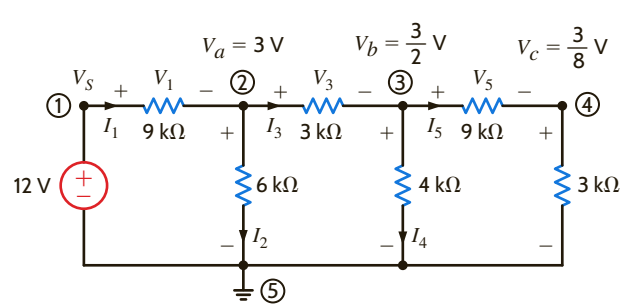

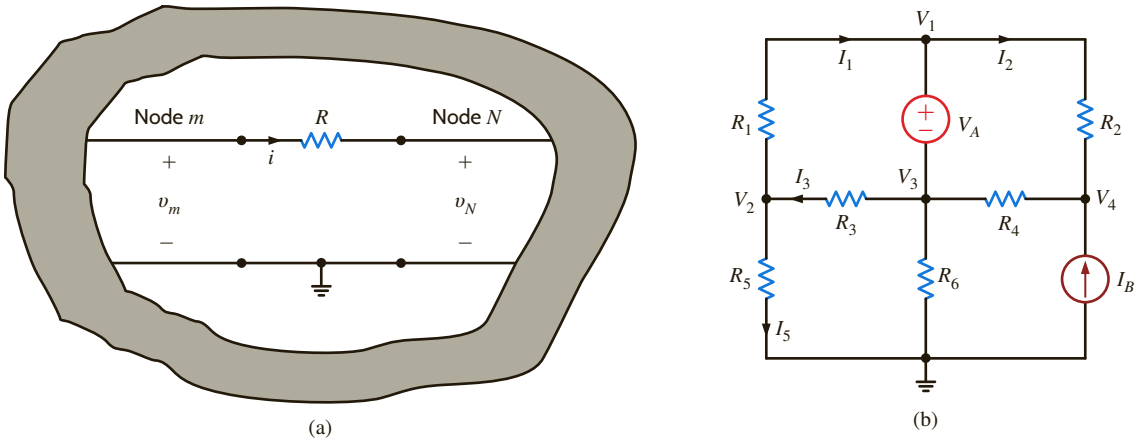

Figure 3.2

Circuit used to illustrate Ohm's law in a multiple-node network.

Thus, as a general rule, if we know the node voltages in this circuit, we can calculate the current through any resistive element using Ohm's law; that is

$$I = \frac{(V_m - V_n)}{R} \tag{3.1}$$

as illustrated in **Fig. 3.2a**. Note carefully that both voltages V_m and V_n are both measured with respect to the same point, i.e., ground. In a nodal analysis, this concept is central to the manner in which we write the equations necessary to determine all the node voltages. Consider for example the network in **Fig. 3.2b**, where the voltages labeled V_1, V_2, V_3, and V_4 represent the voltages at those nodes with respect to the ground node. Then we can write the following KVL equations:

$$-V_2 + I_1R_1 + V_1 = 0$$
$$-V_1 + I_2R_2 + V_4 = 0$$
$$-V_3 + I_3R_3 + V_2 = 0$$

which yields equations for the currents as follows:

$$I_1 = \frac{(V_2 - V_1)}{R_1}$$
$$I_2 = \frac{(V_1 - V_4)}{R_2}$$
$$I_3 = \frac{(V_3 - V_2)}{R_3}$$

In addition, the KVL equation

$$-V_1 + V_A + V_3 = 0$$

indicates that $V_1 - V_3 = V_A$. Finally, Ohm's law yields $I_5 = V_2/R_5$.

Now that we have demonstrated the value of knowing all the node voltages in a network, let us determine the manner in which to calculate them. In a nodal analysis, we employ KCL equations in such a way that the variables contained in these equations are the unknown node voltages of the network. As we have indicated, one of the nodes in an N-node circuit is selected as the reference node, and the voltages at all the remaining $N - 1$ nonreference nodes are measured with respect to this reference node. Using network topology, it can be shown that exactly $N - 1$ linearly independent KCL equations are required to determine the $N - 1$ unknown node voltages. Therefore, theoretically once one of the nodes in an N-node circuit has been selected as the reference node, our task is reduced to identifying the remaining $N - 1$ nonreference nodes and writing one KCL equation at each of them.

In a multiple-node circuit, this process results in a set of $N - 1$ linearly independent simultaneous equations in which the variables are the $N - 1$ unknown node voltages. To

Figure 3.3

An illustration of node voltages.

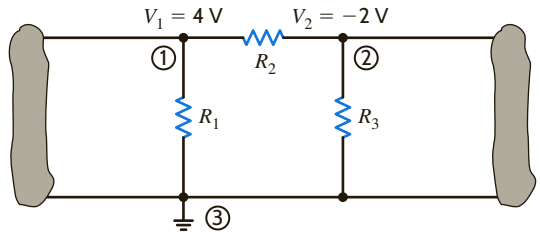

help solidify this idea, consider once again Example 2.5. Note that in this circuit, only four (i.e., any four) of the five KCL equations, one of which is written for each node in this five-node network, are linearly independent. Furthermore, many of the branch currents in this example (those not contained in a source) can be written in terms of the node voltages as illustrated in **Fig. 3.2a** and expressed in Eq. (3.1). It is in this manner, as we will illustrate in the sections that follow, that the KCL equations contain the unknown node voltages.

It is instructive to treat nodal analysis by examining several different types of circuits and illustrating the salient features of each. We begin with the simplest case. However, as a prelude to our discussion of the details of nodal analysis, experience indicates that it is worthwhile to digress for a moment to ensure that the concept of node voltage is clearly understood.

At the outset it is important to specify a reference. For example, to state that the voltage at node A is 12 V means nothing unless we provide the reference point; that is, the voltage at node A is 12 V with respect to what? The circuit in **Fig. 3.3** illustrates a portion of a network containing three nodes, one of which is the reference node.

The voltage $V_1 = 4$ V is the voltage at node 1 with respect to the reference node 3. Similarly, the voltage $V_2 = -2$ V is the voltage at node 2 with respect to node 3. In addition, however, the voltage at node 1 with respect to node 2 is $+6$ V, and the voltage at node 2 with respect to node 1 is -6 V. Furthermore, since the current will flow from the node of higher potential to the node of lower potential, the current in R_1 is from top to bottom, the current in R_2 is from left to right, and the current in R_3 is from bottom to top.

These concepts have important ramifications in our daily lives. If a man were hanging in midair with one hand on one line and one hand on another and the dc line voltage of each line was exactly the same, the voltage across his heart would be zero and he would be safe. If, however, he let go of one line and let his feet touch the ground, the dc line voltage would then exist from his hand to his foot with his heart in the middle. He would probably be dead the instant his foot hit the ground.

In the town where we live, a young man tried to retrieve his parakeet that had escaped its cage and was outside sitting on a power line. He stood on a metal ladder and with a metal pole reached for the parakeet; when the metal pole touched the power line, the man was killed instantly. Electric power is vital to our standard of living, but it is also very dangerous. The material in this book *does not* qualify you to handle it safely. Therefore, always be extremely careful around electric circuits.

Now as we begin our discussion of nodal analysis, our approach will be to begin with simple cases and proceed in a systematic manner to those that are more challenging. Numerous examples will be the vehicle used to demonstrate each facet of this approach. Finally, at the end of this section, we will outline a strategy for attacking any circuit using nodal analysis.

CIRCUITS CONTAINING ONLY INDEPENDENT CURRENT SOURCES Consider the network shown in **Fig. 3.4**. Note that this network contains three nodes, and thus we know that exactly $N - 1 = 3 - 1 = 2$ linearly independent KCL equations will be required

Figure 3.4

A three-node circuit.

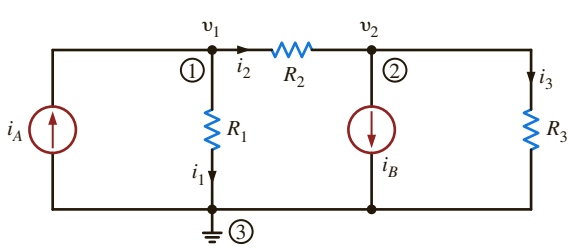

to determine the $N - 1 = 2$ unknown node voltages. First, we select the bottom node as the reference node, and then the voltage at the two remaining nodes labeled v_1 and v_2 will be measured with respect to this node.

The branch currents are assumed to flow in the directions indicated in the figures. If one or more of the branch currents are actually flowing in a direction opposite to that assumed, the analysis will simply produce a branch current that is negative.

Applying KCL at node 1 yields

$$-i_A + i_1 + i_2 = 0$$

Using Ohm's law ($i = Gv$) and noting that the reference node is at zero potential, we obtain

$$-i_A + G_1(v_1 - 0) + G_2(v_1 - v_2) = 0$$

HINT
Employing the passive sign convention.

or

$$(G_1 + G_2)v_1 - G_2v_2 = i_A$$

KCL at node 2 yields

$$-i_2 + i_B + i_3 = 0$$

or

$$-G_2(v_1 - v_2) + i_B + G_3(v_2 - 0) = 0$$

which can be expressed as

$$-G_2v_1 + (G_2 + G_3)v_2 = -i_B$$

Therefore, the two equations for the two unknown node voltages v_1 and v_2 are

$$\begin{aligned} (G_1 + G_2)v_1 - G_2v_2 &= i_A \\ -G_2v_1 + (G_2 + G_3)v_2 &= -i_B \end{aligned} \qquad \textbf{3.2}$$

Note that the analysis has produced two simultaneous equations in the unknowns v_1 and v_2. They can be solved using any convenient technique, and modern calculators and personal computers are very efficient tools for this application.

In what follows, we will demonstrate three techniques for solving linearly independent simultaneous equations: Gaussian elimination, matrix analysis, and the MATLAB mathematical software package. A brief refresher that illustrates the use of both Gaussian elimination and matrix analysis in the solution of these equations is provided in the Problem-Solving Companion for this text. Use of the MATLAB software is straightforward, and we will demonstrate its use as we encounter the application.

The KCL equations at nodes 1 and 2 produced two linearly independent simultaneous equations:

$$\begin{aligned} -i_A + i_1 + i_2 &= 0 \\ -i_2 + i_B + i_3 &= 0 \end{aligned}$$

The KCL equation for the third node (reference) is

$$+i_A - i_1 - i_B - i_3 = 0$$

Note that if we add the first two equations, we obtain the third. Furthermore, any two of the equations can be used to derive the remaining equation. Therefore, in this $N = 3$ node circuit, only $N - 1 = 2$ of the equations are linearly independent and required to determine the $N - 1 = 2$ unknown node voltages.

Note that a nodal analysis employs KCL in conjunction with Ohm's law. Once the direction of the branch currents has been *assumed*, then Ohm's law, as illustrated by Fig. 3.2 and expressed by Eq. (3.1), is used to express the branch currents in terms of the unknown node voltages. We can assume the currents to be in any direction. However, once we assume a particular direction, we must be very careful to write the currents correctly in terms of the node voltages using Ohm's law.

EXAMPLE 3.1

Suppose that the network in Fig. 3.4 has the following parameters: $I_A = 1$ mA, $R_1 = 12$ kΩ, $R_2 = 6$ kΩ, $I_B = 4$ mA, and $R_3 = 6$ kΩ. Let us determine all node voltages and branch currents.

SOLUTION

For purposes of illustration we will solve this problem using Gaussian elimination, matrix analysis, and MATLAB. Using the parameter values, Eq. (3.2) becomes

$$V_1\left[\frac{1}{12\text{k}} + \frac{1}{6\text{k}}\right] - V_2\left[\frac{1}{6\text{k}}\right] = 1 \times 10^{-3}$$

$$-V_1\left[\frac{1}{6\text{k}}\right] + V_2\left[\frac{1}{6\text{k}} + \frac{1}{6\text{k}}\right] = -4 \times 10^{-3}$$

where we employ capital letters because the voltages are constant. The equations can be written as

$$\frac{V_1}{4\text{k}} - \frac{V_2}{6\text{k}} = 1 \times 10^{-3}$$

$$-\frac{V_1}{6\text{k}} + \frac{V_2}{3\text{k}} = -4 \times 10^{-3}$$

Using Gaussian elimination, we solve the first equation for V_1 in terms of V_2:

$$V_1 = V_2\left(\frac{2}{3}\right) + 4$$

This value is then substituted into the second equation to yield

$$\frac{-1}{6\text{k}}\left(\frac{2}{3}V_2 + 4\right) + \frac{V_2}{3\text{k}} = -4 \times 10^{-3}$$

or

$$V_2 = -15\text{ V}$$

This value for V_2 is now substituted back into the equation for V_1 in terms of V_2, which yields

$$V_1 = \frac{2}{3}V_2 + 4$$

$$= -6\text{ V}$$

The circuit equations can also be solved using matrix analysis. The general form of the matrix equation is

$$\mathbf{GV} = \mathbf{I}$$

where in this case

$$\mathbf{G} = \begin{bmatrix} \frac{1}{4\text{k}} & -\frac{1}{6\text{k}} \\ -\frac{1}{6\text{k}} & \frac{1}{3\text{k}} \end{bmatrix}, \mathbf{V} = \begin{bmatrix} V_1 \\ V_2 \end{bmatrix}, \text{ and } \mathbf{I} = \begin{bmatrix} 1 \times 10^{-3} \\ -4 \times 10^{-3} \end{bmatrix}$$

The solution to the matrix equation is

$$\mathbf{V} = \mathbf{G}^{-1}\mathbf{I}$$

and therefore,

$$\begin{bmatrix} V_1 \\ V_2 \end{bmatrix} = \begin{bmatrix} \frac{1}{4\text{k}} & \frac{-1}{6\text{k}} \\ \frac{-1}{6\text{k}} & \frac{1}{3\text{k}} \end{bmatrix}^{-1} \begin{bmatrix} 1 \times 10^{-3} \\ -4 \times 10^{-3} \end{bmatrix}$$

To calculate the inverse of **G**, we need the adjoint and the determinant. The adjoint is

$$\text{Adj}\,\mathbf{G} = \begin{bmatrix} \frac{1}{3\text{k}} & \frac{1}{6\text{k}} \\ \frac{1}{6\text{k}} & \frac{1}{4\text{k}} \end{bmatrix}$$

and the determinant is

$$\begin{aligned} |\mathbf{G}| &= \left(\frac{1}{3\text{k}}\right)\left(\frac{1}{4\text{k}}\right) - \left(\frac{-1}{6\text{k}}\right)\left(\frac{-1}{6\text{k}}\right) \\ &= \frac{1}{18\text{k}^2} \end{aligned}$$

Therefore,

$$\begin{aligned} \begin{bmatrix} V_1 \\ V_2 \end{bmatrix} &= 18\text{k}^2 \begin{bmatrix} \frac{1}{3\text{k}} & \frac{1}{6\text{k}} \\ \frac{1}{6\text{k}} & \frac{1}{4\text{k}} \end{bmatrix} \begin{bmatrix} 1 \times 10^{-3} \\ -4 \times 10^{-3} \end{bmatrix} \\ &= 18\text{k}^2 \begin{bmatrix} \frac{1}{3\text{k}^2} - \frac{4}{6\text{k}^2} \\ \frac{1}{6\text{k}^2} - \frac{1}{\text{k}^2} \end{bmatrix} \\ &= \begin{bmatrix} -6 \\ -15 \end{bmatrix} \end{aligned}$$

In the MATLAB solution, we simplify the form of the equations by multiplying both equations by 12k, yielding

$$\begin{aligned} 3V_1 - 2V_2 &= 12 \\ -2V_1 + 4V_2 &= -48 \end{aligned}$$

In matrix form, the equation is

$$\begin{bmatrix} 3 & -2 \\ -2 & 4 \end{bmatrix} \begin{bmatrix} V_1 \\ V_2 \end{bmatrix} = \begin{bmatrix} 12 \\ -48 \end{bmatrix}$$

Then the data entries and solution using MATLAB are as follows:

```
>> G = [3 -2; -2 4]
   G =
         3  -2
        -2   4
>> I = [12; -48]
   I =
         12
        -48
>> V = inv(G)*I
   V =
         -6.0000
        -15.0000
```

Knowing the node voltages, we can determine all the currents using Ohm's law:

$$I_1 = \frac{V_1}{R_1} = \frac{-6}{12\text{k}} = -\frac{1}{2}\,\text{mA}$$

$$I_2 = \frac{V_1 - V_2}{6\text{k}} = \frac{-6 - (-15)}{6\text{k}} = \frac{3}{2}\,\text{mA}$$

and

$$I_3 = \frac{V_2}{6\text{k}} = \frac{-15}{6\text{k}} = -\frac{5}{2}\text{ mA}$$

Fig. 3.5 illustrates the results of all the calculations. Note that KCL is satisfied at every node.

Figure 3.5
Circuit used in Example 3.1.

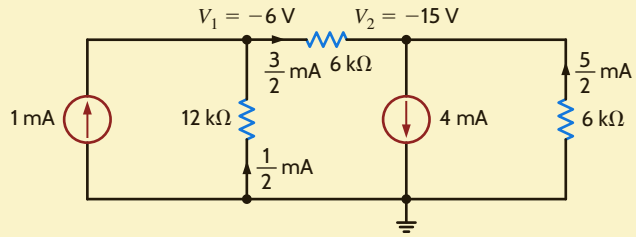

Let us now examine the circuit in **Fig. 3.6**. The current directions are assumed as shown in the figure.

We note that this network has four nodes. The node at the bottom of the circuit is selected as the reference node and labeled with the ground symbol. Since $N = 4$, $N - 1 = 3$ linearly independent KCL equations will be required to determine the three unknown nonreference node voltages labeled v_1, v_2, and v_3.

At node 1, KCL yields

$$i_1 - i_A + i_2 - i_3 = 0$$

or

$$\frac{v_1}{R_1} - i_A + \frac{v_1 - v_2}{R_2} - \frac{v_3 - v_1}{R_3} = 0$$

$$v_1\left(\frac{1}{R_1} + \frac{1}{R_2} + \frac{1}{R_3}\right) - v_2\frac{1}{R_2} - v_3\frac{1}{R_3} = i_A$$

At node 2, KCL yields

$$-i_2 + i_4 - i_5 = 0$$

or

$$-\frac{v_1 - v_2}{R_2} + \frac{v_2}{R_4} - \frac{v_3 - v_2}{R_5} = 0$$

$$-v_1\frac{1}{R_2} + v_2\left(\frac{1}{R_2} + \frac{1}{R_4} + \frac{1}{R_5}\right) - v_3\frac{1}{R_5} = 0$$

Figure 3.6
A four-node circuit.

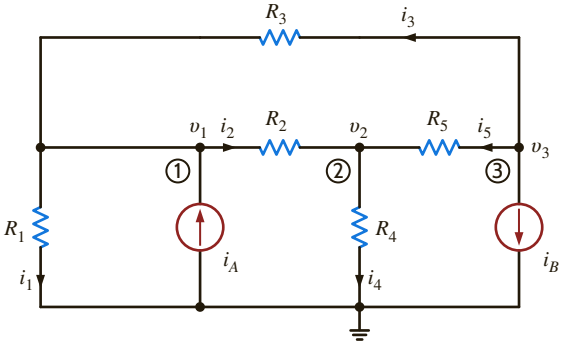

At node 3, the equation is

$$i_3 + i_5 + i_B = 0$$

or

$$\frac{v_3 - v_1}{R_3} + \frac{v_3 - v_2}{R_5} + i_B = 0$$
$$-v_1\frac{1}{R_3} - v_2\frac{1}{R_5} + v_3\left(\frac{1}{R_3} + \frac{1}{R_5}\right) = -i_B$$

Grouping the node equations together, we obtain

$$\begin{aligned} v_1\left(\frac{1}{R_1} + \frac{1}{R_2} + \frac{1}{R_3}\right) - v_2\frac{1}{R_2} - v_3\frac{1}{R_3} &= i_A \\ -v_1\frac{1}{R_2} + v_2\left(\frac{1}{R_2} + \frac{1}{R_4} + \frac{1}{R_5}\right) - v_3\frac{1}{R_5} &= 0 \\ -v_1\frac{1}{R_3} - v_2\frac{1}{R_5} + v_3\left(\frac{1}{R_3} + \frac{1}{R_5}\right) &= -i_B \end{aligned} \tag{3.3}$$

Note that our analysis has produced three simultaneous equations in the three unknown node voltages v_1, v_2, and v_3. The equations can also be written in matrix form as

$$\begin{bmatrix} \frac{1}{R_1} + \frac{1}{R_2} + \frac{1}{R_3} & -\frac{1}{R_2} & -\frac{1}{R_3} \\ -\frac{1}{R_2} & \frac{1}{R_2} + \frac{1}{R_4} + \frac{1}{R_5} & -\frac{1}{R_5} \\ -\frac{1}{R_3} & -\frac{1}{R_5} & \frac{1}{R_3} + \frac{1}{R_5} \end{bmatrix} \begin{bmatrix} v_1 \\ v_2 \\ v_3 \end{bmatrix} = \begin{bmatrix} i_A \\ 0 \\ -i_B \end{bmatrix} \tag{3.4}$$

At this point it is important that we note the symmetrical form of the equations that describe the two previous networks. Eqs. (3.2) and (3.3) exhibit the same type of symmetrical form. The **G** matrix for each network is a symmetrical matrix. This symmetry is not accidental. The node equations for networks containing only resistors and independent current sources can always be written in this symmetrical form. We can take advantage of this fact and learn to write the equations by inspection. Note in the first equation of (3.2) that the coefficient of v_1 is the sum of all the conductances connected to node 1 and the coefficient of v_2 is the negative of the conductances connected between node 1 and node 2. The right-hand side of the equation is the sum of the currents entering node 1 through current sources. This equation is KCL at node 1. In the second equation in (3.2), the coefficient of v_2 is the sum of all the conductances connected to node 2, the coefficient of v_1 is the negative of the conductance connected between node 2 and node 1, and the right-hand side of the equation is the sum of the currents entering node 2 through current sources. This equation is KCL at node 2. Similarly, in the first equation in (3.3), the coefficient of v_1 is the sum of the conductances connected to node 1, the coefficient of v_2 is the negative of the conductance connected between node 1 and node 2, the coefficient of v_3 is the negative of the conductance connected between node 1 and node 3, and the right-hand side of the equation is the sum of the currents entering node 1 through current sources. The other two equations in (3.3) are obtained in a similar manner.

In general, if KCL is applied to node j with node voltage v_j, the coefficient of v_j is the sum of all the conductances connected to node j and the coefficients of the other node voltages (e.g., v_{j-1}, v_{j+1}) are the negative of the sum of the conductances connected directly between these nodes and node j. The right-hand side of the equation is equal to the sum of the currents entering the node via current sources. Therefore, the left-hand side of the equation represents the sum of the currents leaving node j and the right-hand side of the equation represents the currents entering node j.

EXAMPLE 3.2

Let us apply what we have just learned to write the equations for the network in Fig. 3.7 by inspection. Then, given the following parameters, we will determine the node voltages using MATLAB: $R_1 = R_2 = 2\ \text{k}\Omega$, $R_3 = R_4 = 4\ \text{k}\Omega$, $R_5 = 1\ \text{k}\Omega$, $i_A = 4$ mA, and $i_B = 2$ mA.

Figure 3.7

Circuit used in Example 3.2.

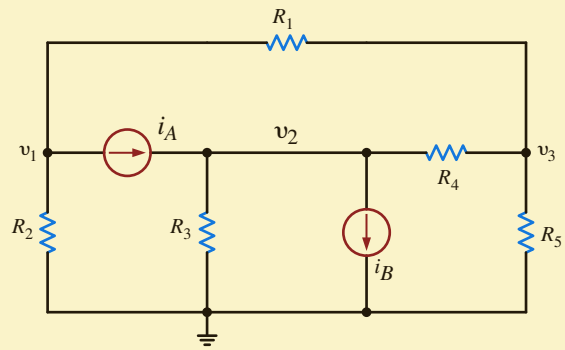

SOLUTION

The equations are

$$v_1\left(\frac{1}{R_1}+\frac{1}{R_2}\right) - v_2(0) - v_3\left(\frac{1}{R_1}\right) = -i_A$$

$$-v_1(0) + v_2\left(\frac{1}{R_3}+\frac{1}{R_4}\right) - v_3\left(\frac{1}{R_4}\right) = i_A - i_B$$

$$-v_1\left(\frac{1}{R_1}\right) - v_2\left(\frac{1}{R_4}\right) + v_3\left(\frac{1}{R_1}+\frac{1}{R_4}+\frac{1}{R_5}\right) = 0$$

which can also be written directly in matrix form as

$$\begin{bmatrix} \frac{1}{R_1}+\frac{1}{R_2} & 0 & -\frac{1}{R_1} \\ 0 & \frac{1}{R_3}+\frac{1}{R_4} & -\frac{1}{R_4} \\ -\frac{1}{R_1} & -\frac{1}{R_4} & \frac{1}{R_1}+\frac{1}{R_4}+\frac{1}{R_5} \end{bmatrix} \begin{bmatrix} v_1 \\ v_2 \\ v_3 \end{bmatrix} = \begin{bmatrix} -i_A \\ i_A - i_B \\ 0 \end{bmatrix}$$

Both the equations and the **G** matrix exhibit the symmetry that will always be present in circuits that contain only resistors and current sources.

If the component values are now used, the matrix equation becomes

$$\begin{bmatrix} \frac{1}{2\text{k}}+\frac{1}{2\text{k}} & 0 & -\frac{1}{2\text{k}} \\ 0 & \frac{1}{4\text{k}}+\frac{1}{4\text{k}} & -\frac{1}{4\text{k}} \\ -\frac{1}{2\text{k}} & -\frac{1}{4\text{k}} & \frac{1}{2\text{k}}+\frac{1}{4\text{k}}+\frac{1}{1\text{k}} \end{bmatrix} \begin{bmatrix} v_1 \\ v_2 \\ v_3 \end{bmatrix} = \begin{bmatrix} -0.004 \\ 0.002 \\ 0 \end{bmatrix}$$

Multiplying the matrix equation by 4k yields the equation

$$\begin{bmatrix} 4 & 0 & -2 \\ 0 & 2 & -1 \\ -2 & -1 & 7 \end{bmatrix} \begin{bmatrix} v_1 \\ v_2 \\ v_3 \end{bmatrix} = \begin{bmatrix} -16 \\ 8 \\ 0 \end{bmatrix}$$

The MATLAB solution is then

```
>> G = [4 0 -2; 0 2 -1; -2 -1 7]
   G =
        4     0    -2
        0     2    -1
       -2    -1     7
```

```
>> I = [-16;8;0]
   I =
        -16
          8
          0

>> V = inv(G)*I
   V =
        -4.3636
         3.6364
        -0.7273
```

LEARNING ASSESSMENTS

E3.1 Write the node equations for the circuit in Fig. E3.1.

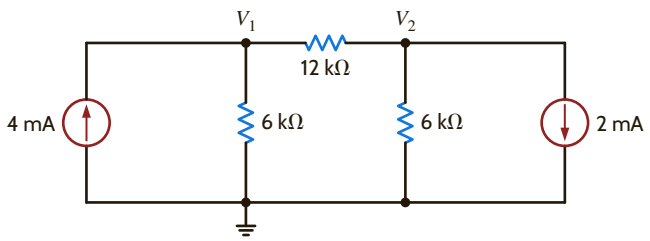

Figure E3.1

ANSWER:

$$\frac{1}{4k}V_1 - \frac{1}{12k}V_2 = 4 \times 10^3,$$
$$\frac{-1}{12k}V_1 + \frac{1}{4k}V_2 = -2 \times 10^{-3}.$$

E3.2 Find all the node voltages in the network in Fig. E3.2 using MATLAB.

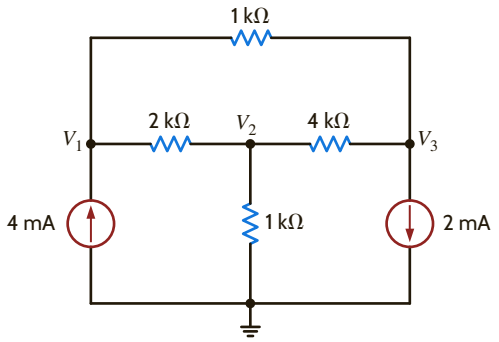

Figure E3.2

ANSWER:

$V_1 = 5.4286$ V,
$V_2 = 2.000$ V,
$V_3 = 3.1429$ V.

E3.3 Use nodal analysis to find V_o in Fig. E3.3.

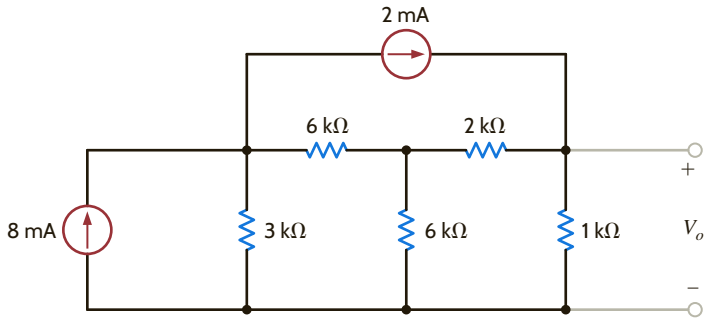

Figure E3.3

ANSWER:

$V_o = 2.79$ V.

CIRCUITS CONTAINING DEPENDENT CURRENT SOURCES The presence of a dependent source may destroy the symmetrical form of the nodal equations that define the circuit. Consider the circuit shown in **Fig. 3.8**, which contains a current-controlled current source. The KCL equations for the nonreference nodes are

$$\beta i_o + \frac{v_1}{R_1} + \frac{v_1 - v_2}{R_2} = 0$$

and

$$\frac{v_2 - v_1}{R_2} + i_o - i_A = 0$$

where $i_o = v_2/R_3$. Simplifying the equations, we obtain

$$(G_1 + G_2)v_1 - (G_2 - \beta G_3)v_2 = 0$$
$$-G_2 v_1 + (G_2 + G_3)v_2 = i_A$$

or in matrix form

$$\begin{bmatrix} (G_1 + G_2) & (-G_2 - \beta G_3) \\ -G_2 & (G_2 + G_3) \end{bmatrix} \begin{bmatrix} v_1 \\ v_2 \end{bmatrix} = \begin{bmatrix} 0 \\ i_A \end{bmatrix}$$

Note that the presence of the dependent source has destroyed the symmetrical nature of the node equations.

Figure 3.8

Circuit with a dependent source.

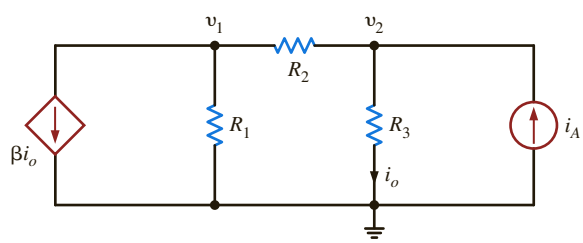

EXAMPLE 3.3

Let us determine the node voltages for the network in Fig. 3.8, given the following parameters:

$$\beta = 2 \qquad R_2 = 6\ \text{k}\Omega \qquad i_A = 2\ \text{mA}$$
$$R_1 = 12\ \text{k}\Omega \qquad R_3 = 3\ \text{k}\Omega$$

SOLUTION Using these values with the equations for the network yields

$$\frac{1}{4\text{k}}V_1 + \frac{1}{2\text{k}}V_2 = 0$$
$$-\frac{1}{6\text{k}}V_1 + \frac{1}{2\text{k}}V_2 = 2 \times 10^{-3}$$

Multiplying the equations by 12k yields the equation

$$\begin{bmatrix} 3 & 6 \\ -2 & 6 \end{bmatrix} \begin{bmatrix} V_1 \\ V_2 \end{bmatrix} = \begin{bmatrix} 0 \\ 24 \end{bmatrix}$$

The MATLAB solution is then

```
>> G = [3 6; -2 6]
   G =
         3    6
        -2    6
>> I = [0;24]
   I =
         0
        24
>> V = inv(G)*I
   V =
        -4.8000
         2.4000
```

We can check these answers by determining the branch currents in the network and then using that information to test KCL at the nodes. For example, the current from top to bottom through R_3 is

$$I_o = \frac{V_2}{R_3} = \frac{12/5}{3\text{k}} = \frac{4}{5\text{k}}\,\text{A}$$

Similarly, the current from right to left through R_2 is

$$I_2 = \frac{V_2 - V_1}{R_2} = \frac{12/5 - (-24/5)}{6\text{k}} = \frac{6}{5\text{k}}\,\text{A}$$

All the results are shown in **Fig. 3.9**. Note that KCL is satisfied at every node.

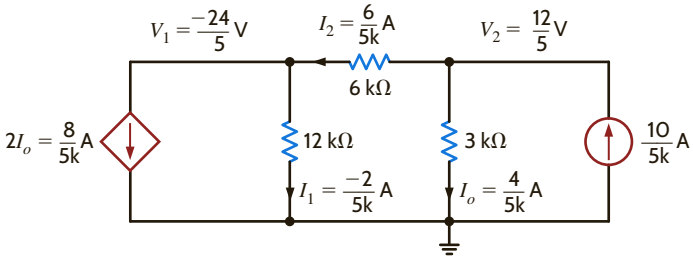

Figure 3.9
Circuit used in Example 3.3.

EXAMPLE 3.4

Let us determine the set of linearly independent equations that when solved will yield the node voltages in the network in **Fig. 3.10**. Then, given the following component values, we will compute the node voltages using MATLAB: $R_1 = 1$ kΩ, $R_2 = R_3 = 2$ kΩ, $R_4 = 4$ kΩ, $i_A = 2$ mA, $i_B = 4$ mA, and $\alpha = 0.002$.

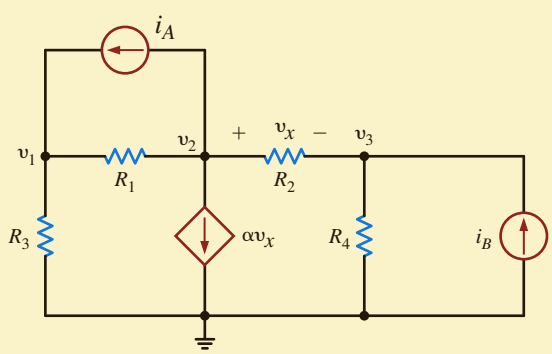

Figure 3.10
Circuit containing a voltage-controlled current source.

Applying KCL at each of the nonreference nodes yields the equations

$$\begin{aligned} G_3 v_1 + G_1(v_1 - v_2) - i_A &= 0 \\ i_A + G_1(v_2 - v_1) + \alpha v_x + G_2(v_2 - v_3) &= 0 \\ G_2(v_3 - v_2) + G_4 v_3 - i_B &= 0 \end{aligned}$$

where $v_x = v_2 - v_3$. Simplifying these equations, we obtain

$$\begin{aligned} (G_1 + G_3)v_1 - G_1 v_2 &= i_A \\ -G_1 v_1 + (G_1 + \alpha + G_2)v_2 - (\alpha + G_2)v_3 &= -i_A \\ -G_2 v_2 + (G_2 + G_4)v_3 &= i_B \end{aligned}$$

Given the component values, the equations become

$$\begin{bmatrix} \frac{1}{1k}+\frac{1}{2k} & -\frac{1}{k} & 0 \\ -\frac{1}{k} & \frac{1}{k}+\frac{2}{k}+\frac{1}{2k} & -\left(\frac{2}{k}+\frac{1}{2k}\right) \\ 0 & -\frac{1}{2k} & \frac{1}{2k}+\frac{1}{4k} \end{bmatrix} \begin{bmatrix} v_1 \\ v_2 \\ v_3 \end{bmatrix} = \begin{bmatrix} 0.002 \\ -0.002 \\ 0.004 \end{bmatrix}$$

Multiplying the equations by 4k yields the equation

$$\begin{bmatrix} 6 & -4 & 0 \\ -4 & 14 & -10 \\ 0 & -2 & 3 \end{bmatrix} \begin{bmatrix} V_1 \\ V_2 \\ V_3 \end{bmatrix} = \begin{bmatrix} 8 \\ -8 \\ 16 \end{bmatrix}$$

The MATLAB solution is then

```
>> G = [6 -4 0;-4 14 -10;0 -2 3]
   G =
        6   -4    0
       -4   14  -10
        0   -2    3
>> I = [8;-8;16]
   I =
        8
       -8
       16
>> V = inv(G)*I
   V =
        8.5714
       10.8571
       12.5714
```

LEARNING ASSESSMENTS

E3.4 Find the node voltages in the circuit in Fig. E3.4.

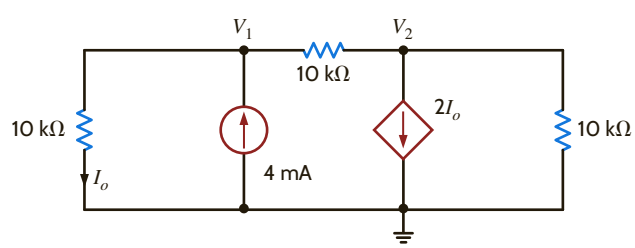

Figure E3.4

ANSWER:
$V_1 = 16$ V,
$V_2 = -8$ V.

E3.5 Find the voltage V_o in the network in Fig. E3.5.

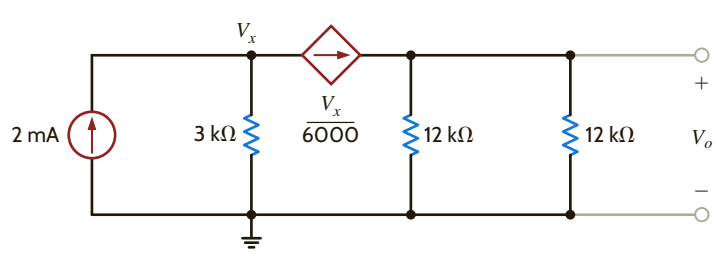

Figure E3.5

ANSWER:
$V_o = 4$ V.

E3.6 Find V_o in Fig. E3.6 using nodal analysis.

ANSWER:
$V_o = 0.952$ V.

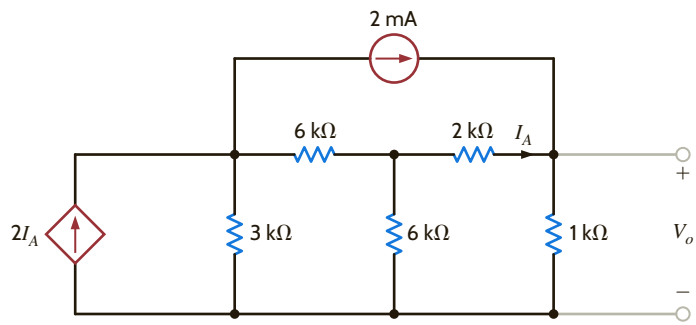

Figure E3.6

CIRCUITS CONTAINING INDEPENDENT VOLTAGE SOURCES As is our practice, in our discussion of this topic we will proceed from the simplest case to more complicated cases. The simplest case is that in which an independent voltage source is connected to the reference node. The following example illustrates this case.

EXAMPLE 3.5

Consider the circuit shown in **Fig. 3.11a**. Let us determine all node voltages and branch currents.

SOLUTION

This network has three nonreference nodes with labeled node voltages V_1, V_2, and V_3. Based on our previous discussions, we would assume that in order to find all the node voltages we would need to write a KCL equation at each of the nonreference nodes. The resulting three linearly independent simultaneous equations would produce the unknown node voltages. However, note that V_1 and V_3 are known quantities because an independent voltage source is connected directly between the reference node and each of these nodes. Therefore, $V_1 = 12$ V and $V_3 = -6$ V. Furthermore, note that the current through the 9-kΩ resistor is $[12 - (-6)]/9\text{k} = 2$ mA from left to right. We do not know V_2 or the current in the remaining resistors. However, since only one node voltage is unknown, a single-node equation will produce it. Applying KCL to this center node yields

$$\frac{V_2 - V_1}{12\text{k}} + \frac{V_2 - 0}{6\text{k}} + \frac{V_2 - V_3}{12\text{k}} = 0 \qquad \text{or} \qquad \frac{V_2 - 12}{12\text{k}} + \frac{V_2}{6\text{k}} + \frac{V_2 - (-6)}{12\text{k}} = 0$$

from which we obtain

$$V_2 = \frac{3}{2}\text{ V}$$

HINT
Any time an independent voltage source is connected between the reference node and a nonreference node, the nonreference node voltage is known.

Once all the node voltages are known, Ohm's law can be used to find the branch currents shown in **Fig. 3.11b**. The diagram illustrates that KCL is satisfied at every node.

Note that the presence of the voltage sources in this example has simplified the analysis, since two of the three linear independent equations are $V_1 = 12$ V and $V_3 = -6$ V. We will find that as a general rule, whenever voltage sources are present between nodes, the node voltage equations that describe the network will be simpler.

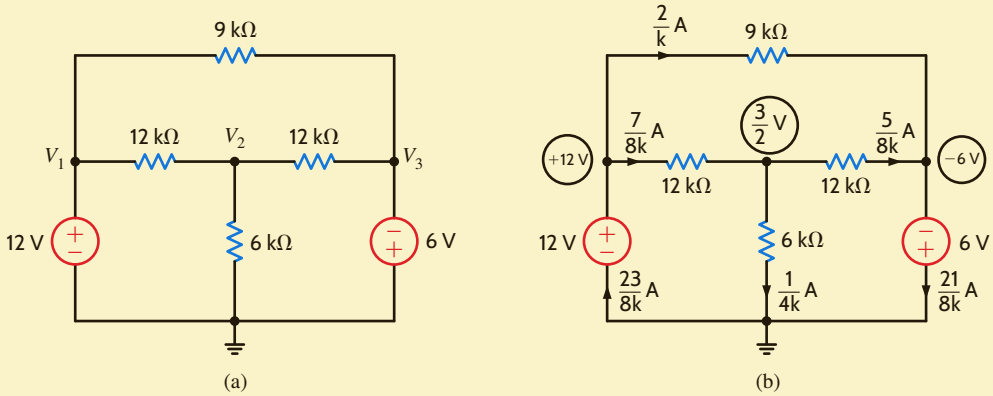

Figure 3.11
Circuit used in Example 3.5.

LEARNING ASSESSMENTS

E3.7 Use nodal analysis to find the current I_o in the network in Fig. E3.7.

ANSWER:
$I_o = \frac{3}{4}$ mA.

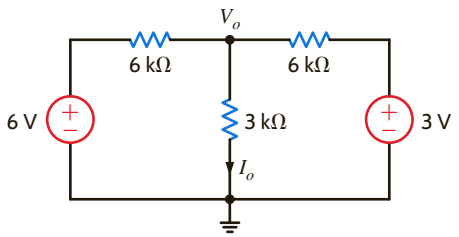

Figure E3.7

E3.8 Find V_o in Fig. E3.8 using nodal analysis.

ANSWER:
$V_o = 3.89$ V.

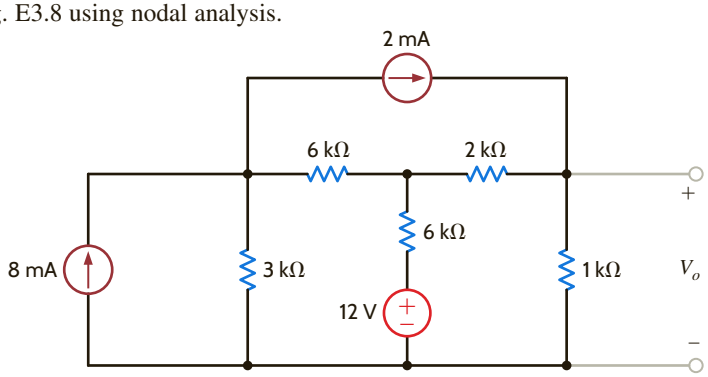

Figure E3.8

Next let us consider the case in which an independent voltage source is connected between two nonreference nodes.

EXAMPLE 3.6

Suppose we wish to find the currents in the two resistors in the circuit of **Fig. 3.12a**.

SOLUTION

If we try to attack this problem in a brute-force manner, we immediately encounter a problem. Thus far, branch currents were either known source values or could be expressed as the branch voltage divided by the branch resistance. However, the branch current through the 6-V source is certainly not known and cannot be directly expressed using Ohm's law. We can, of course, give this current a name and write the KCL equations at the two nonreference nodes in terms of this current. However, this approach is no panacea because this technique will result in *two* linearly independent simultaneous equations in terms of *three* unknowns—that is, the two node voltages and the current in the voltage source.

To solve this dilemma, we recall that $N - 1$ linearly independent equations are required to determine the $N - 1$ nonreference node voltages in an N-node circuit. Since our network has three nodes, we need two linearly independent equations. Now note that if somehow one of the node voltages is known, we immediately know the other; that is, if V_1 is known, then $V_2 = V_1 - 6$. If V_2 is known, then $V_1 = V_2 + 6$. Therefore, the difference in potential between the two nodes is *constrained* by the voltage source and, hence,

$$V_1 - V_2 = 6$$

This constraint equation is one of the two linearly independent equations needed to determine the node voltages.

Next consider the network in **Fig. 3.12b**, in which the 6-V source is completely enclosed within the dashed surface. The constraint equation governs this dashed portion of the network. The remaining equation is obtained by applying KCL to this dashed surface, which is commonly called a *supernode*. Recall that in Chapter 2 we demonstrated that KCL must hold

for a surface, and this technique eliminates the problem of dealing with a current through a voltage source. KCL for the supernode is

$$-6 \times 10^{-3} + \frac{V_1}{6\text{k}} + \frac{V_2}{12\text{k}} + 4 \times 10^{-3} = 0$$

Solving these equations yields $V_1 = 10$ V and $V_2 = 4$ V and, hence, $I_1 = 5/3$ mA and $I_2 = 1/3$ mA. A quick check indicates that KCL is satisfied at every node.

Note that applying KCL at the reference node yields the same equation as shown above. The student might think that the application of KCL at the reference node saves one from having to deal with supernodes. Recall that we do not apply KCL at any node—even the reference node—that contains an independent voltage source. This idea can be illustrated with the circuit in the next example.

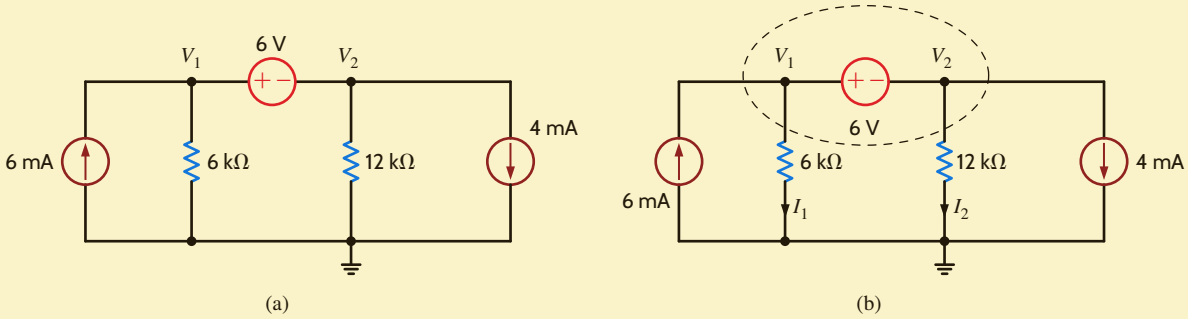

Figure 3.12
Circuits used in Example 3.6.

EXAMPLE 3.7

Let us determine the current I_o in the network in **Fig. 3.13a**.

SOLUTION

Examining the network, we note that node voltages V_2 and V_4 are known and the node voltages V_1 and V_3 are constrained by the equation

$$V_1 - V_3 = 12$$

The network is redrawn in **Fig. 3.13b**.

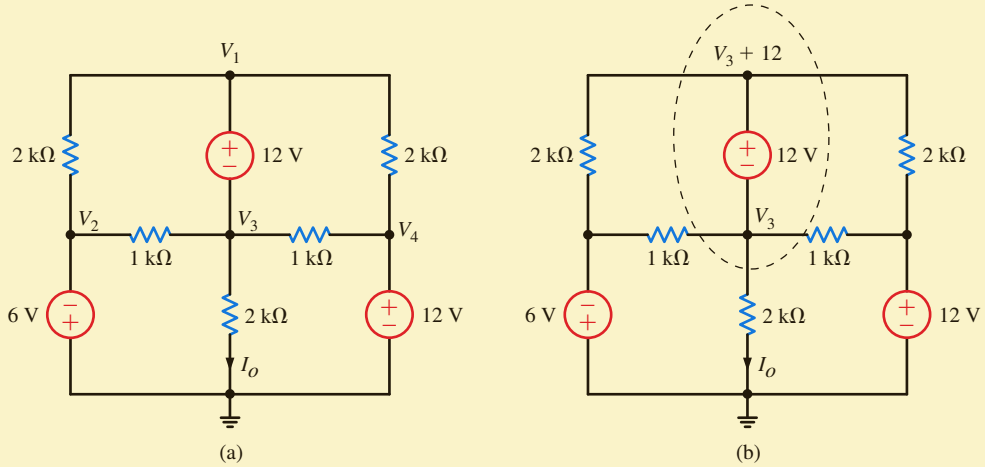

Figure 3.13
Example circuit with supernodes.

Since we want to find the current I_o, V_1 (in the supernode containing V_1 and V_3) is written as $V_3 + 12$. The KCL equation at the supernode is then

$$\frac{V_3 + 12 - (-6)}{2\text{k}} + \frac{V_3 + 12 - 12}{2\text{k}} + \frac{V_3 - (-6)}{1\text{k}} + \frac{V_3 - 12}{1\text{k}} + \frac{V_3}{2\text{k}} = 0$$

Solving the equation for V_3 yields

$$V_3 = -\frac{6}{7}\text{ V}$$

I_o can then be computed immediately as

$$I_o = \frac{-\frac{6}{7}}{2\text{k}} = -\frac{3}{7}\text{ mA}$$

LEARNING ASSESSMENTS

E3.9 Use nodal analysis to find I_o in the network in Fig. E3.9.

ANSWER:
$I_o = 3.8$ mA.

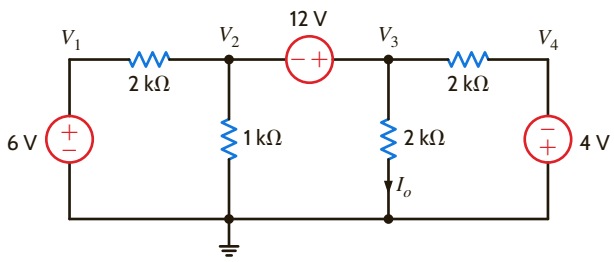

Figure E3.9

E3.10 Find V_o in Fig. E3.10 using nodal analysis.

ANSWER:
$V_o = 5.6$ V.

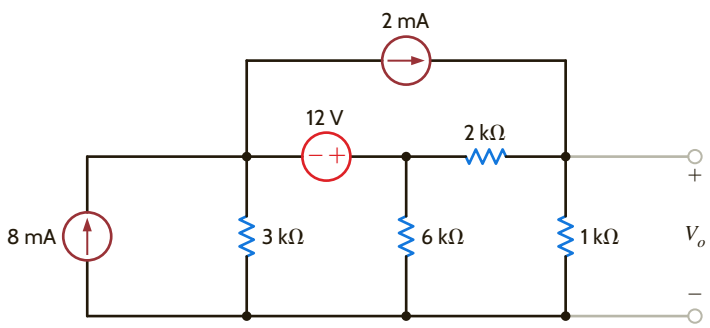

Figure E3.10

CIRCUITS CONTAINING DEPENDENT VOLTAGE SOURCES As the following examples will indicate, networks containing dependent (controlled) sources are treated in the same manner as described earlier.

EXAMPLE 3.8

We wish to find I_o in the network in Fig. 3.14.

SOLUTION

Since the dependent voltage source is connected between the node labeled V_1 and the reference node,

$$V_1 = 2\text{k}I_x$$

KCL at the node labeled V_2 is

$$\frac{V_2 - V_1}{2\text{k}} - \frac{4}{\text{k}} + \frac{V_2}{1\text{k}} = 0$$

where

$$I_x = \frac{V_2}{1\text{k}}$$

Solving these equations yields $V_2 = 8$ V and $V_1 = 16$ V. Therefore,

$$I_o = \frac{V_1 - V_2}{2\text{k}}$$
$$= 4 \text{ mA}$$

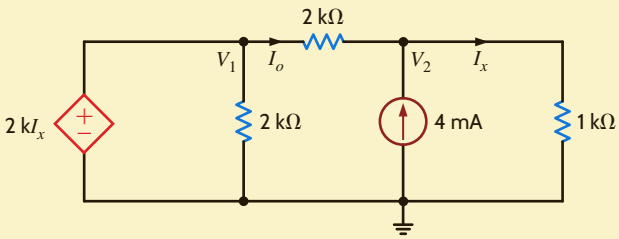

Figure 3.14
Circuits used in Example 3.8.

EXAMPLE 3.9

Let us find the current I_o in the network in Fig. 3.15.

SOLUTION

This circuit contains both an independent voltage source and a voltage-controlled voltage source. Note that $V_3 = 6$ V, $V_2 = V_x$, and a supernode exists between the nodes labeled V_1 and V_2.

Applying KCL to the supernode, we obtain

$$\frac{V_1 - V_3}{6\text{k}} + \frac{V_1}{12\text{k}} + \frac{V_2}{6\text{k}} + \frac{V_2 - V_3}{12\text{k}} = 0$$

where the constraint equation for the supernode is

$$V_1 - V_2 = 2V_x$$

The final equation is

$$V_3 = 6$$

Solving these equations, we find that

$$V_1 = \frac{9}{2} \text{ V}$$

and, hence,

$$I_o = \frac{V_1}{12\text{k}} = \frac{3}{8} \text{ mA}$$

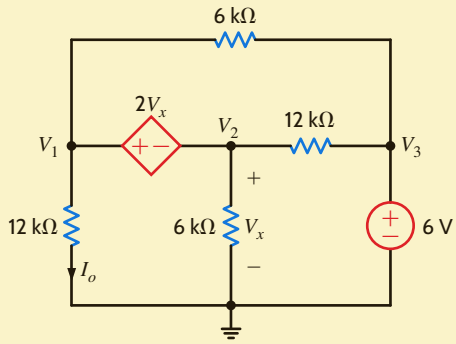

Figure 3.15
Circuit used in Example 3.9.

Finally, let us consider two additional circuits that, for purposes of comparison, we will examine using more than one method.

EXAMPLE 3.10

Let us find V_o in the network in **Fig. 3.16a**. Note that the circuit contains two voltage sources, one of which is a controlled source, and two independent current sources. The circuit is redrawn in **Fig. 3.16b** in order to label the nodes and identify the supernode surrounding the controlled source. Because of the presence of the independent voltage source, the voltage at node 4 is known to be 4 V. We will use this knowledge in writing the node equations for the network.

Since the network has five nodes, four linear independent equations are sufficient to determine all the node voltages. Within the supernode, the defining equation is

$$V_1 - V_2 = 2V_x$$

where

$$V_2 = V_x$$

and thus

$$V_1 = 3V_x$$

Furthermore, we know that one additional equation is

$$V_4 = 4$$

Thus, given these two equations, only two more equations are needed in order to solve for the unknown node voltages. These additional equations result from applying KCL at the supernode and at the node labeled V_3. The equations are

$$-\frac{2}{\text{k}} + \frac{V_x}{1\text{k}} + \frac{V_x - V_3}{1\text{k}} + \frac{3V_x - V_3}{1\text{k}} + \frac{3V_x - 4}{1\text{k}} = 0$$

$$\frac{V_3 - 3V_x}{1\text{k}} + \frac{V_3 - V_x}{1\text{k}} = \frac{2}{\text{k}}$$

Combining the equations yields the two equations

$$8V_x - 2V_3 = 6$$
$$-4V_x + 2V_3 = 2$$

Solving these equations, we obtain

$$V_x = 2\text{ V} \quad \text{and} \quad V_3 = 5\text{ V}$$
$$V_o = 3V_x - V_3 = 1\text{ V}$$

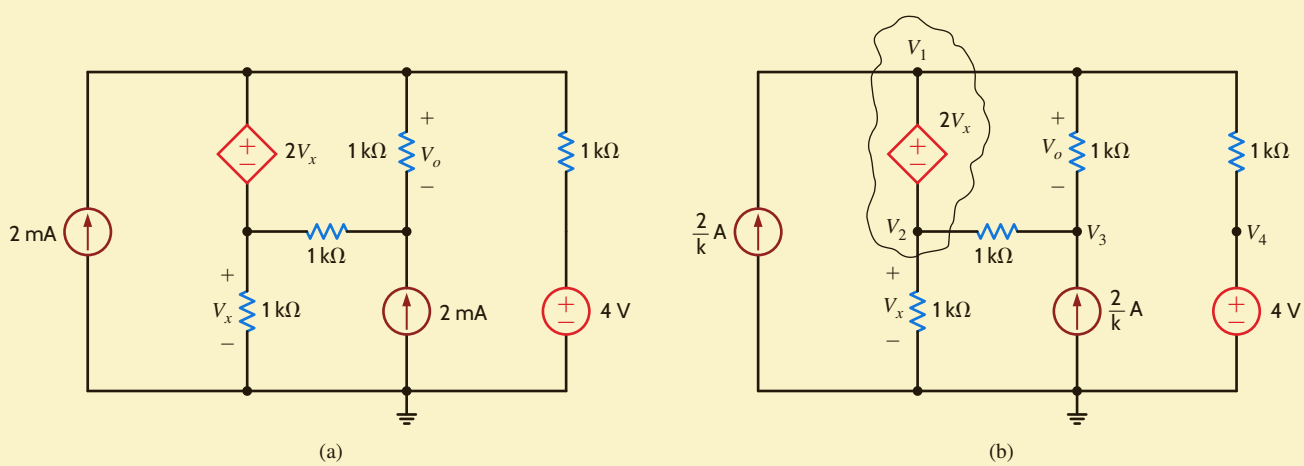

Figure 3.16
Circuit used in Example 3.10.

EXAMPLE 3.11

We wish to find I_o in the network in **Fig. 3.17a**. Note that this circuit contains three voltage sources, one of which is a controlled source, and another is a controlled current source. Because two of the voltage sources are connected to the reference node, one node voltage is known directly and one is specified by the dependent source. Furthermore, the difference in voltage between two nodes is defined by the 6-V independent source.

The network is redrawn in **Fig. 3.17b** in order to label the nodes and identify the supernode. Since the network has six nodes, five linear independent equations are needed to determine the unknown node voltages.

The two equations for the supernode are

$$V_1 - V_4 = -6$$

$$\frac{V_1 - 12}{1\text{k}} + \frac{V_1 - V_3}{1\text{k}} + 2I_x + \frac{V_4 - V_3}{1\text{k}} + \frac{V_4}{1\text{k}} + \frac{V_4 - V_5}{1\text{k}} = 0$$

The three remaining equations are

$$V_2 = 12$$

$$V_3 = 2V_x$$

$$\frac{V_5 - V_4}{1\text{k}} + \frac{V_5}{1\text{k}} = 2I_x$$

The equations for the control parameters are

$$V_x = V_1 - 12$$

$$I_x = \frac{V_4}{1\text{k}}$$

Combining these equations yields the following set of equations:

$$-2V_1 + 5V_4 - V_5 = -36$$

$$V_1 - V_4 = -6$$

$$-3V_4 + 2V_5 = 0$$

In matrix form, the equations are

$$\begin{bmatrix} -2 & 5 & -1 \\ 1 & -1 & 0 \\ 0 & -3 & 2 \end{bmatrix} \begin{bmatrix} V_1 \\ V_2 \\ V_3 \end{bmatrix} = \begin{bmatrix} -36 \\ -6 \\ 0 \end{bmatrix}$$

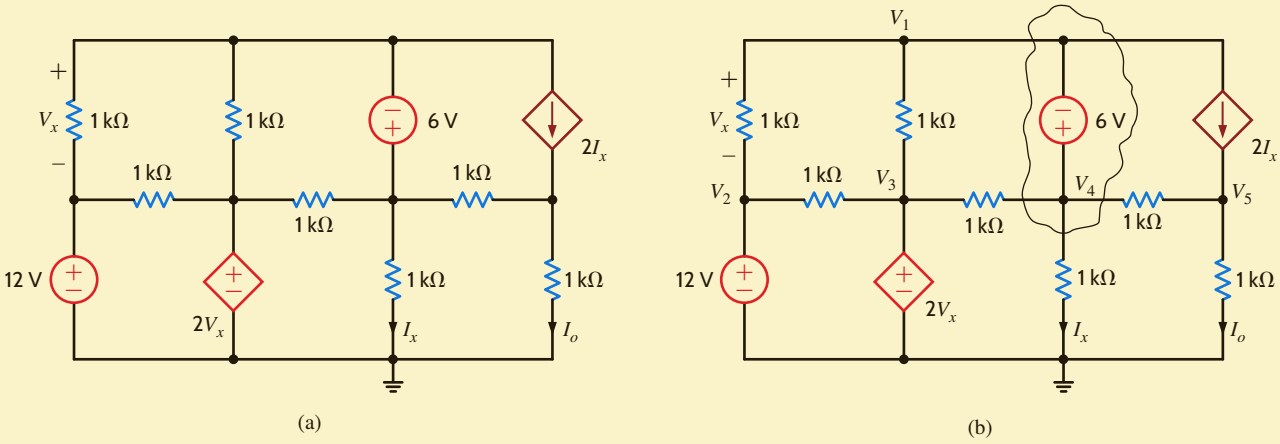

Figure 3.17

Circuit used in Example 3.11.

The MATLAB solution is then

```
>> G = [-2 5 -1;1 -1 0;0 -3 2]
   G =
        -2    5   -1
         1   -1    0
         0   -3    2

>> I = [-36;-6;0]
   I =
        -36
         -6
          0

>> V = inv(G)*I
   V =
        -38.0000
        -32.0000
        -48.0000
```

Then, since $V_3 = 2V_x$, $V_3 = -100$ V. I_o is -48 mA. The reader is encouraged to verify that KCL is satisfied at every node.

PROBLEM-SOLVING STRATEGY

NODAL ANALYSIS

STEP 1. Determine the number of nodes in the circuit. Select one node as the reference node. Assign a node voltage between each nonreference node and the reference node. All node voltages are assumed positive with respect to the reference node. For an N-node circuit, there are $N - 1$ node voltages. As a result, $N - 1$ linearly independent equations must be written to solve for the node voltages.

STEP 2. Write a constraint equation for each voltage source—independent or dependent—in the circuit in terms of the assigned node voltages using KVL. Each constraint equation represents one of the necessary linearly independent equations, and N_v voltage sources yield N_v linearly independent equations. For each dependent voltage source, express the controlling variable for that source in terms of the node voltages.

A voltage source—independent or dependent—may be connected between a nonreference node and the reference node or between two nonreference nodes. A supernode is formed by a voltage source and its two connecting nonreference nodes.

STEP 3. Use KCL to formulate the remaining $N - 1 - N_v$ linearly independent equations. First, apply KCL at each nonreference node not connected to a voltage source. Second, apply KCL at each supernode. Treat dependent current sources like independent current sources when formulating the KCL equations. For each dependent current source, express the controlling variable in terms of the node voltages.

LEARNING ASSESSMENTS

E3.11 Use nodal analysis to find I_o in the circuit in Fig. E3.11.

ANSWER:
$I_o = \frac{4}{3}$ mA.

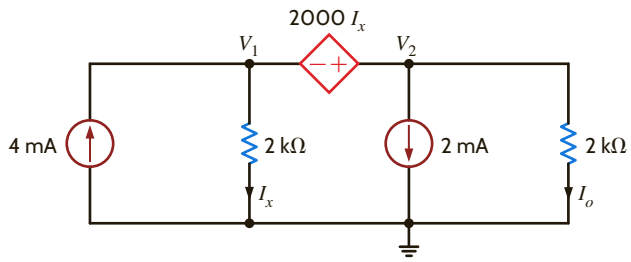

Figure E3.11

E3.12 Find V_o in Fig. E3.12 using nodal analysis.

ANSWER:
$V_o = 6.29$ V.

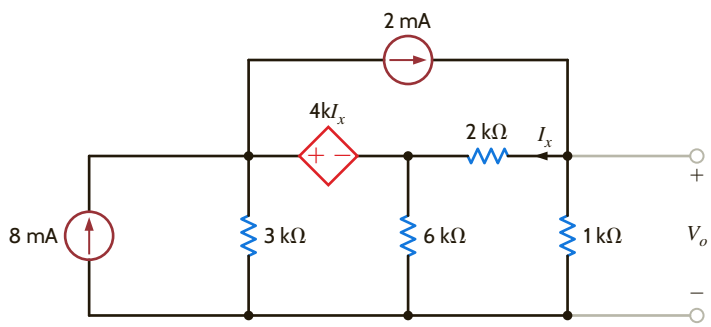

Figure E3.12

3.2 Loop Analysis

We found that in a nodal analysis the unknown parameters are the node voltages and KCL was employed to determine them. Once these node voltages have been calculated, all the branch currents in the network can easily be determined using Ohm's law. In contrast to this approach, a loop analysis uses KVL to determine a set of loop currents in the circuit. Once these loop currents are known, Ohm's law can be used to calculate any voltages in the network. Via network topology we can show that, in general, there are exactly $B - N + 1$ linearly independent KVL equations for any network, where B is the number of branches in the circuit and N is the number of nodes. For example, if we once again examine the circuit in Fig. 2.5, we find that there are eight branches and five nodes. Thus, the number of linearly independent KVL equations necessary to determine all currents in the network is $B - N + 1 = 8 - 5 + 1 = 4$. The network in Fig. 2.5 is redrawn as shown in **Fig. 3.18** with four loop currents labeled as shown. The branch currents are then determined as

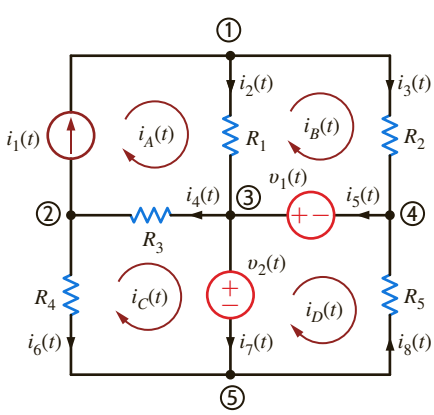

Figure 3.18
Figure 2.5 redrawn with loop currents.

$$
\begin{aligned}
i_1(t) &= i_A(t) \\
i_2(t) &= i_A(t) - i_B(t) \\
i_3(t) &= i_B(t) \\
i_4(t) &= i_A(t) - i_C(t) \\
i_5(t) &= i_B(t) - i_D(t) \\
i_6(t) &= -i_C(t) \\
i_7(t) &= i_C(t) - i_D(t) \\
i_8(t) &= -i_D(t)
\end{aligned}
$$

All the circuits we will examine in this text will be *planar*, which simply means that we can draw the circuit on a sheet of paper in such a way that no conductor crosses another conductor. If a circuit is planar, the loops are more easily identified. For example, recall in Chapter 2 that we found that a single equation was sufficient to determine the current in a circuit containing a single loop. If the circuit contains N independent loops, we will show (and the general topological formula $B - N + 1$ can be used for verification) that N independent simultaneous equations will be required to describe the network.

Our approach to loop analysis will mirror the approach used in nodal analysis (i.e., we will begin with simple cases and systematically proceed to those that are more difficult). Then at the end of this section we will outline a general strategy for employing loop analysis.

CIRCUITS CONTAINING ONLY INDEPENDENT VOLTAGE SOURCES To begin our analysis, consider the circuit shown in **Fig. 3.19**. We note that this network has seven branches and six nodes, and thus the number of linearly independent KVL equations necessary to determine all currents in the circuit is $B - N + 1 = 7 - 6 + 1 = 2$. Since two linearly independent KVL equations are required, we identify two independent loops, *A-B-E-F-A* and *B-C-D-E-B*. We now define a new set of current variables called *loop currents*, which can be used to find the physical currents in the circuit. Let us assume that current i_1 flows in the first loop and that current i_2 flows in the second loop. Then the branch current flowing from B to E through R_3 is $i_1 - i_2$. The directions of the currents have been assumed. As was the case in the nodal analysis, if the actual currents are not in the direction indicated, the values calculated will be negative.

Applying KVL to the first loop yields

$$+v_1 + v_3 + v_2 - v_{S1} = 0$$

HINT

The equations employ the passive sign convention.

KVL applied to loop 2 yields

$$+v_{S2} + v_4 + v_5 - v_3 = 0$$

where $v_1 = i_1R_1$, $v_2 = i_1R_2$, $v_3 = (i_1 - i_2)R_3$, $v_4 = i_2R_4$, and $v_5 = i_2R_5$.

Substituting these values into the two KVL equations produces the two simultaneous equations required to determine the two loop currents; that is,

$$
\begin{aligned}
i_1(R_1 + R_2 + R_3) - i_2(R_3) &= v_{S1} \\
-i_1(R_3) + i_2(R_3 + R_4 + R_5) &= -v_{S2}
\end{aligned}
$$

or in matrix form

$$
\begin{bmatrix} R_1 + R_2 + R_3 & -R_3 \\ -R_3 & R_3 + R_4 + R_5 \end{bmatrix}
\begin{bmatrix} i_1 \\ i_2 \end{bmatrix}
=
\begin{bmatrix} v_{S1} \\ -v_{S2} \end{bmatrix}
$$

Figure 3.19

A two-loop circuit.

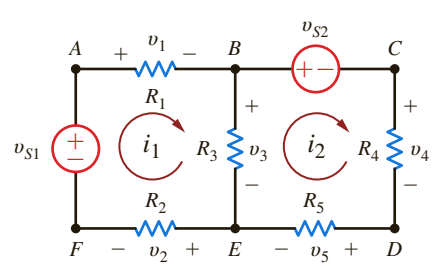

At this point, it is important to define what is called a *mesh*. A mesh is a special kind of loop that does not contain any loops within it. Therefore, as we traverse the path of a mesh, we do not encircle any circuit elements. For example, the network in Fig. 3.19 contains two meshes defined by the paths *A-B-E-F-A* and *B-C-D-E-B*. The path *A-B-C-D-E-F-A* is a loop, but it is not a mesh. Since the majority of our analysis in this section will involve writing KVL equations for meshes, we will refer to the currents as mesh currents and the analysis as a *mesh analysis*.

EXAMPLE 3.12

Consider the network in **Fig. 3.20a**. We wish to find the current I_o.

SOLUTION

We will begin the analysis by writing mesh equations. Note that there are no + and − signs on the resistors. However, they are not needed, since we will apply Ohm's law to each resistive element as we write the KVL equations. The equation for the first mesh is

$$-12 + 6\text{k}I_1 + 6\text{k}(I_1 - I_2) = 0$$

The KVL equation for the second mesh is

$$6\text{k}(I_2 - I_1) + 3\text{k}I_2 + 3 = 0$$

where $I_o = I_1 - I_2$.

Solving the two simultaneous equations yields $I_1 = 5/4$ mA and $I_2 = 1/2$ mA. Therefore, $I_o = 3/4$ mA. All the voltages and currents in the network are shown in **Fig. 3.20b**. Recall from nodal analysis that once the node voltages were determined, we could check our analysis using KCL at the nodes. In this case, we know the branch currents and can use KVL around any closed path to check our results. For example, applying KVL to the outer loop yields

$$-12 + \frac{15}{2} + \frac{3}{2} + 3 = 0$$

$$0 = 0$$

Since we want to calculate the current I_o, we could use loop analysis, as shown in **Fig. 3.20c**. Note that the loop current I_1 passes through the center leg of the network and, therefore, $I_1 = I_o$. The two loop equations in this case are

$$-12 + 6\text{k}(I_1 + I_2) + 6\text{k}I_1 = 0$$

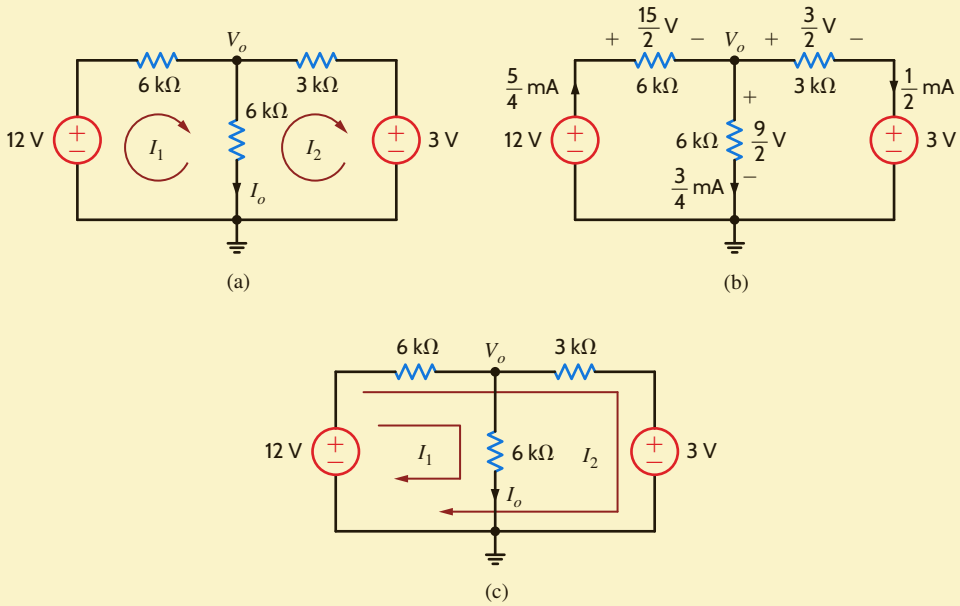

Figure 3.20
Circuits used in Example 3.12.

and

$$-12 + 6\text{k}(I_1 + I_2) + 3\text{k}I_2 + 3 = 0$$

Solving these equations yields $I_1 = 3/4$ mA and $I_2 = 1/2$ mA. Since the current in the 12-V source is $I_1 + I_2 = 5/4$ mA, these results agree with the mesh analysis.

Finally, for purposes of comparison, let us find I_o using nodal analysis. The presence of the two voltage sources would indicate that this is a viable approach. Applying KCL at the top center node, we obtain

$$\frac{V_o - 12}{6\text{k}} + \frac{V_o}{6\text{k}} + \frac{V_o - 3}{3\text{k}} = 0$$

and, hence,

$$V_o = \frac{9}{2}\text{ V}$$

and then

$$I_o = \frac{V_o}{6\text{k}} = \frac{3}{4}\text{ mA}$$

Note that in this case we had to solve only one equation instead of two.

Once again, we are compelled to note the symmetrical form of the mesh equations that describe the circuit in Fig. 3.19. Note that the coefficient matrix for this circuit is symmetrical.

Since this symmetry is generally exhibited by networks containing resistors and independent voltage sources, we can learn to write the mesh equations by inspection. In the first equation, the coefficient of i_1 is the sum of the resistances through which mesh current 1 flows, and the coefficient of i_2 is the negative of the sum of the resistances common to mesh current 1 and mesh current 2. The right-hand side of the equation is the algebraic sum of the voltage sources in mesh 1. The sign of the voltage source is positive if it aids the assumed direction of the current flow and negative if it opposes the assumed flow. The first equation is KVL for mesh 1. In the second equation, the coefficient of i_2 is the sum of all the resistances in mesh 2, the coefficient of i_1 is the negative of the sum of the resistances common to mesh 1 and mesh 2, and the right-hand side of the equation is the algebraic sum of the voltage sources in mesh 2. In general, if we assume all of the mesh currents to be in the same direction (clockwise or counterclockwise), then if KVL is applied to mesh j with mesh current i_j, the coefficient of i_j is the sum of the resistances in mesh j and the coefficients of the other mesh currents (e.g., i_{j-1}, i_{j+1}) are the negatives of the resistances common to these meshes and mesh j. The right-hand side of the equation is equal to the algebraic sum of the voltage sources in mesh j. These voltage sources have a positive sign if they aid the current flow i_j and a negative sign if they oppose it.

EXAMPLE 3.13

Let us write the mesh equations by inspection for the network in Fig. 3.21. Then we will use MATLAB to solve for the mesh currents.

SOLUTION

The three linearly independent simultaneous equations are

$$(4\text{k} + 6\text{k})I_1 - (0)I_2 - (6\text{k})I_3 = -6$$
$$-(0)I_1 + (9\text{k} + 3\text{k})I_2 - (3\text{k})I_3 = 6$$
$$-(6\text{k})I_1 - (3\text{k})I_2 + (3\text{k} + 6\text{k} + 12\text{k})I_3 = 0$$

or in matrix form

$$\begin{bmatrix} 10\text{k} & 0 & -6\text{k} \\ 0 & 12\text{k} & -3\text{k} \\ -6\text{k} & -3\text{k} & 21\text{k} \end{bmatrix} \begin{bmatrix} I_1 \\ I_2 \\ I_3 \end{bmatrix} = \begin{bmatrix} -6 \\ 6 \\ 0 \end{bmatrix}$$

Note the symmetrical form of the equations.

Dividing the equation by 1000 yields the matrix

$$\begin{bmatrix} 10 & 0 & -6 \\ 0 & 12 & -3 \\ 0 & -3 & 2 \end{bmatrix} \begin{bmatrix} I_1 \\ I_2 \\ I_3 \end{bmatrix} = \begin{bmatrix} -0.006 \\ 0.006 \\ 0 \end{bmatrix}$$

The MATLAB solution is then

```
>> G = [10 0 -6;0 12 -3;-6 -3 21]
   G =
        10     0    -6
         0    12    -3
        -6    -3    21

>> I = [-0.006;0.006;0]
   I =
       -0.0060
        0.0060
             0

>> V = inv(G)*I
   V =
       1.0e-003*

         -0.6757
          0.4685
         -0.1261
```

or

$I_1 = -0.6757$ mA
$I_2 = 0.4685$ mA
$I_3 = -0.1261$ mA

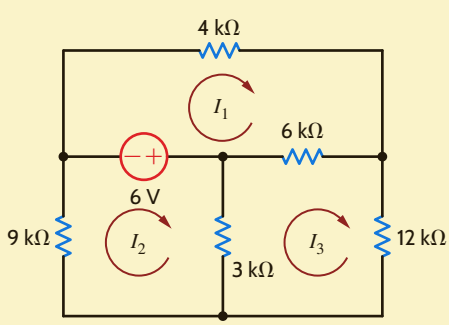

Figure 3.21
Circuit used in Example 3.13.

CIRCUITS CONTAINING INDEPENDENT CURRENT SOURCES Just as the presence of a voltage source in a network simplified the nodal analysis, the presence of a current source simplifies a loop analysis. The following examples illustrate the point.

LEARNING ASSESSMENTS

E3.13 Use mesh equations to find V_o in the circuit in Fig. E3.13.

ANSWER:
$V_o = \frac{33}{5}$ V.

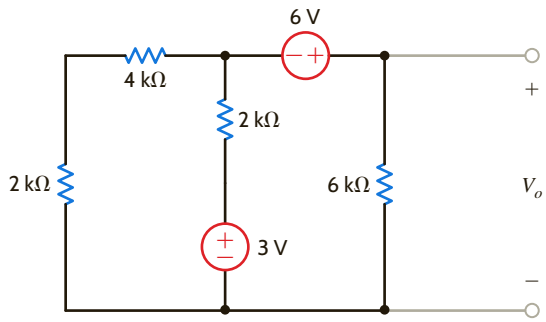

Figure E3.13

E3.14 Find V_o in Fig. E3.14 using mesh analysis.

ANSWER:
$V_o = 8.96$ V.

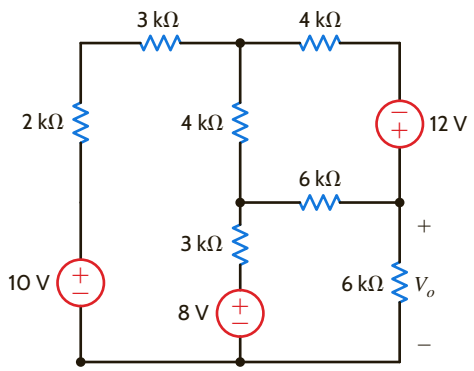

Figure E3.14

EXAMPLE 3.14

Let us find both V_o and V_1 in the circuit in Fig. 3.22.

SOLUTION

Although it appears that there are two unknown mesh currents, the current I_1 goes directly through the current source and, therefore, I_1 is constrained to be 2 mA. Hence, only the current I_2 is unknown. KVL for the rightmost mesh is

$$2\text{k}(I_2 - I_1) - 2 + 6\text{k}I_2 = 0$$

And, of course,

$$I_1 = 2 \times 10^{-3}$$

These equations can be written as

$$-2\text{k}I_1 + 8\text{k}I_2 = 2$$
$$I_1 = 2/\text{k}$$

Solving these equations for I_2 yields $I_2 = 3/4\text{kA}$ and thus

$$V_o = 6\text{k}I_2 = \frac{9}{2}\text{V}$$

To obtain V_1, we apply KVL around any closed path. If we use the outer loop, the KVL equation is

$$-V_1 + 4\text{k}I_1 - 2 + 6\text{k}I_2 = 0$$

And, therefore,

$$V_1 = \frac{21}{2}\text{ V}$$

Note that since the current I_1 is known, the 4-kΩ resistor did not enter the equation in finding V_o. However, it appears in every loop containing the current source and, thus, is used in finding V_1.

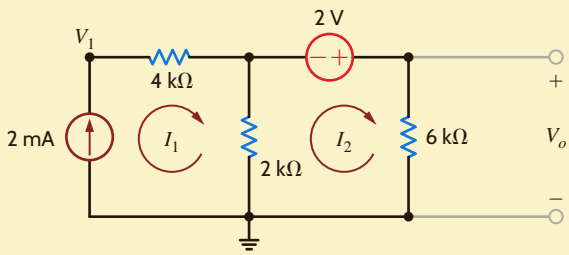

Figure 3.22
Circuit used in Example 3.14.

EXAMPLE 3.15

We wish to find V_o in the network in Fig. 3.23.

SOLUTION

Since the currents I_1 and I_2 pass directly through a current source, two of the three required equations are

$$I_1 = 4 \times 10^{-3}$$
$$I_2 = -2 \times 10^{-3}$$

The third equation is KVL for the mesh containing the voltage source; that is,

$$4\text{k}(I_3 - I_2) + 2\text{k}(I_3 - I_1) + 6\text{k}I_3 - 3 = 0$$

These equations yield

$$I_3 = \frac{1}{4}\text{ mA}$$

and, hence,

$$V_o = 6\text{k}I_3 - 3 = \frac{-3}{2}\text{ V}$$

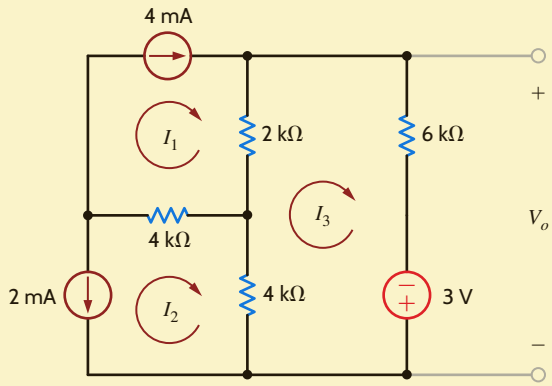

Figure 3.23
Circuit used in Example 3.15.

What we have demonstrated in the previous example is the general approach for dealing with independent current sources when writing KVL equations; that is, use one loop through each current source. The number of "window panes" in the network tells us how many equations we need. Additional KVL equations are written to cover the remaining circuit elements in the network. The following example illustrates this approach.

EXAMPLE 3.16

Let us find I_o in the network in **Fig. 3.24a**.

SOLUTION

First, we select two loop currents I_1 and I_2 such that I_1 passes directly through the 2-mA source, and I_2 passes directly through the 4-mA source, as shown in **Fig. 3.24b**. Therefore, two of our three linearly independent equations are

$$I_1 = 2 \times 10^{-3}$$
$$I_2 = 4 \times 10^{-3}$$

HINT

In this case, the 4-mA current source is located on the boundary between two meshes. Thus, we will demonstrate two techniques for dealing with this type of situation. One is a special loop technique, and the other is known as the supermesh approach.

The remaining loop current I_3 must pass through the circuit elements not covered by the two previous equations and cannot, of course, pass through the current sources. The path for this remaining loop current can be obtained by open-circuiting the current sources, as shown in **Fig. 3.24c**. When all currents are labeled on the original circuit, the KVL equation for this last loop, as shown in **Fig. 3.24d**, is

$$-6 + 1\text{k}I_3 + 2\text{k}(I_2 + I_3) + 2\text{k}(I_3 + I_2 - I_1) + 1\text{k}(I_3 - I_1) = 0$$

Solving the equations yields

$$I_3 = \frac{-2}{3}\ \text{mA}$$

and, therefore,

$$I_o = I_1 - I_2 - I_3 = \frac{-4}{3}\ \text{mA}$$

Next, consider the supermesh technique. In this case, the three mesh currents are specified as shown in **Fig. 3.24e**, and since the voltage across the 4-mA current source is unknown, it is assumed to be V_x. The mesh currents constrained by the current sources are

$$I_1 = 2 \times 10^{-3}$$
$$I_2 - I_3 = 4 \times 10^{-3}$$

The KVL equations for meshes 2 and 3, respectively, are

$$2\text{k}I_2 + 2\text{k}(I_2 - I_1) - V_x = 0$$
$$-6 + 1\text{k}I_3 + V_x + 1\text{k}(I_3 - I_1) = 0$$

Adding the last two equations yields

$$-6 + 1\text{k}I_3 + 2\text{k}I_2 + 2\text{k}(I_2 - I_1) + 1\text{k}(I_3 - I_1) = 0$$

Note, that the unknown voltage V_x has been eliminated. The two constraint equations, together with this latter equation, yield the desired result.

The purpose of the supermesh approach is to avoid introducing the unknown voltage V_x. The supermesh is created by mentally removing the 4-mA current source, as shown in **Fig. 3.24f**. Then writing the KVL equation around the dotted path, which defines the supermesh, using the original mesh currents as shown in Fig. 3.24e, yields

$$-6 + 1\text{k}I_3 + 2\text{k}I_2 + 2\text{k}(I_2 - I_1) + 1\text{k}(I_3 - I_1) = 0$$

Note that this supermesh equation is the same as that obtained earlier by introducing the voltage V_x.

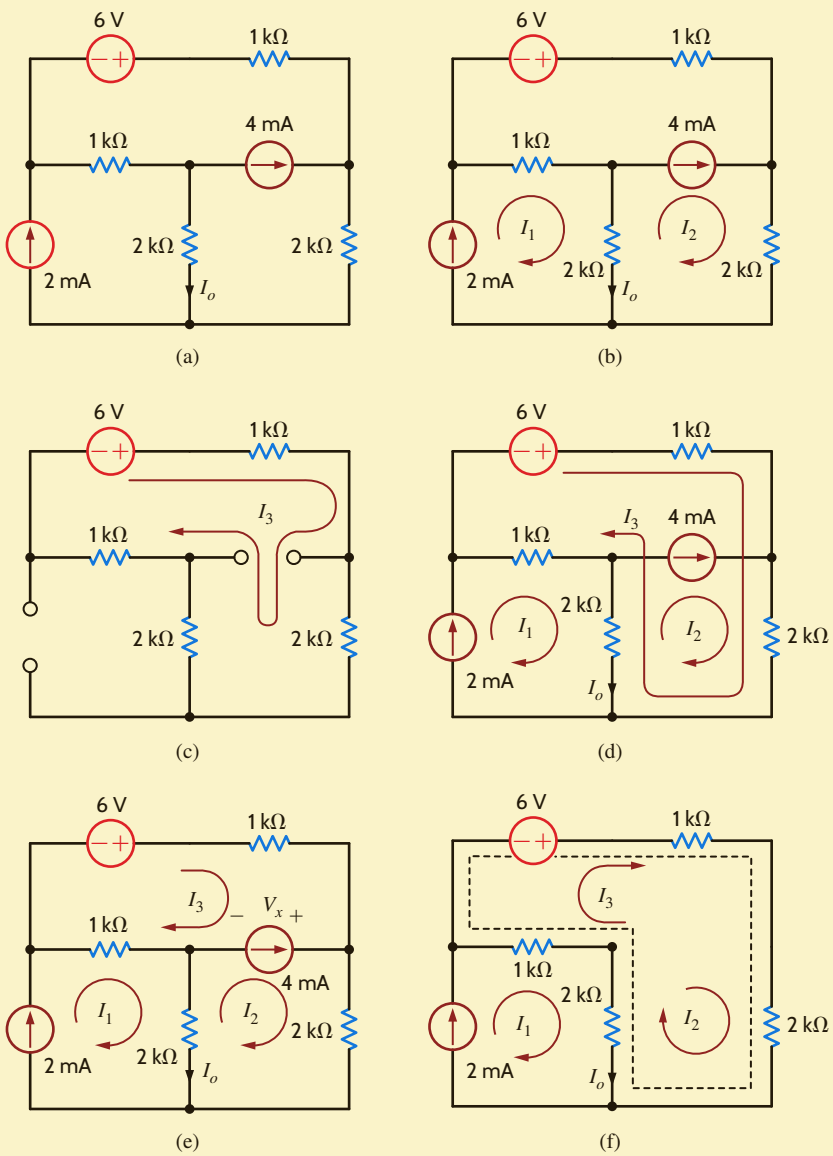

Figure 3.24
Circuits used in Example 3.16.

LEARNING ASSESSMENTS

E3.15 Find V_o in the network in Fig. E3.15.

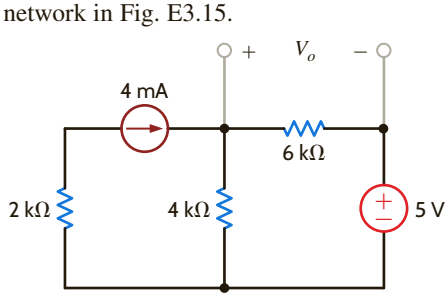

Figure E3.15

ANSWER:
$V_o = \frac{33}{5}$ V.

E3.16 Find V_o in the network in Fig. E3.16.

ANSWER:
$V_o = \frac{32}{5}$ V.

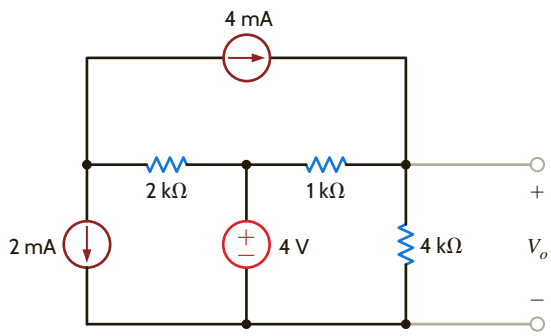

Figure E3.16

E3.17 Find V_o in Fig. E3.17 using loop analysis.

ANSWER:
$V_o = 9.71$ V.

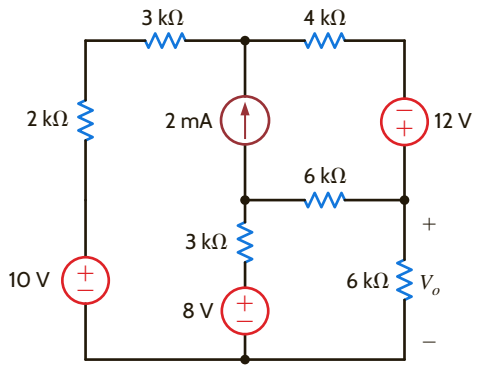

Figure E3.17

E3.18 Find V_o in Fig. E3.17 using mesh analysis.

ANSWER:
$V_o = 9.71$ V.

CIRCUITS CONTAINING DEPENDENT SOURCES We deal with circuits containing dependent sources just as we have in the past. First, we treat the dependent source as though it were an independent source when writing the KVL equations. Then we write the controlling equation for the dependent source. The following examples illustrate the point.

EXAMPLE 3.17

Let us find V_o in the circuit in Fig. 3.25, which contains a voltage-controlled voltage source.

SOLUTION

The equations for the loop currents shown in the figure are

$$-2V_x + 2\text{k}(I_1 + I_2) + 4\text{k}I_1 = 0$$
$$-2V_x + 2\text{k}(I_1 + I_2) - 3 + 6\text{k}I_2 = 0$$

where

$$V_x = 4\text{k}I_1$$

These equations can be combined to produce

$$-2\text{k}I_1 + 2\text{k}I_2 = 0$$
$$-6\text{k}I_1 + 8\text{k}I_2 = 3$$

In matrix form, the equations are

$$\begin{bmatrix} -2000 & 2000 \\ -6000 & 8000 \end{bmatrix} \begin{bmatrix} I_1 \\ I_2 \end{bmatrix} = \begin{bmatrix} 0 \\ 3 \end{bmatrix}$$

The MATLAB solution is then

```
>> R = [-2000 2000;-6000 8000]
   R =
        -2000   2000
        -6000   8000

>> V = [0;3]
   V =
        0
        3

>> I = inv(R)*V
   I =
        0.0015
        0.0015
```

Or

$I_1 = 1.5$ mA
$I_2 = 1.5$ mA

and, therefore,

$$V_o = 6\text{k}I_2 = 9 \text{ V}$$

For comparison, we will also solve the problem using nodal analysis. The presence of the voltage sources indicates that this method could be simpler. Treating the 3-V source and its connecting nodes as a supernode and writing the KCL equation for this supernode yields

$$\frac{V_x - 2V_x}{2\text{k}} + \frac{V_x}{4\text{k}} + \frac{V_x + 3}{6\text{k}} = 0$$

where

$$V_o = V_x + 3$$

These equations also yield $V_o = 9$ V.

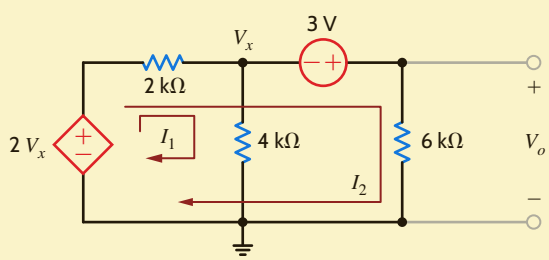

Figure 3.25
Circuit used in Example 3.17.

EXAMPLE 3.18

Let us find V_o in the circuit in Fig. 3.26, which contains a voltage-controlled current source.

SOLUTION

The currents I_1 and I_2 are drawn through the current sources. Therefore, two of the equations needed are

$$I_1 = \frac{V_x}{2000}$$
$$I_2 = 2 \times 10^{-3}$$

The KVL equation for the third mesh is

$$-3 + 2\text{k}(I_3 - I_1) + 6\text{k}I_3 = 0$$

where

$$V_x = 4\text{k}\,(I_1 - I_2)$$

Combining these equations yields

$$\begin{aligned} -I_1 + 2I_2 &= 0 \\ I_2 &= 2/\text{k} \\ -2\text{k}I_2 + 8\text{k}I_3 &= 3 \end{aligned}$$

In matrix form, the equations are

$$\begin{bmatrix} -1 & 2 & 0 \\ 0 & 1 & 0 \\ -2000 & 0 & 8000 \end{bmatrix} \begin{bmatrix} I_1 \\ I_2 \\ I_3 \end{bmatrix} = \begin{bmatrix} 0 \\ 0.002 \\ 3 \end{bmatrix}$$

The MATLAB solution is then

```
>> R = [-1 2 0;0 1 0;-2000 0 8000]
   R =
          -1    2       0
           0    1       0
       -2000    0    8000

>> V = [0;0.002;3]
   V =
           0
      0.0020
      3.0000

>> I = inv(R)*V
   I =
      0.0040
      0.0020
      0.0014
```

The actual numbers are $I_1 = 4.0$ mA, $I_2 = 2.0$ mA, and $I_3 = 1.375$ mA, where MATLAB has rounded off the value of I_3.

And, hence, $V_o = 8.25$ V.

Figure 3.26

Circuit used in Example 3.18.

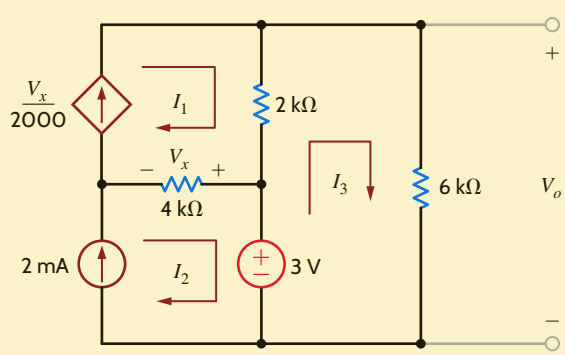

EXAMPLE 3.19

The network in Fig. 3.27 contains both a current-controlled voltage source and a voltage-controlled current source. Let us use MATLAB to determine the loop currents.

SOLUTION

The equations for the loop currents shown in the figure are

$$I_1 = \frac{4}{\text{k}}$$

$$I_2 = \frac{V_x}{2\text{k}}$$

$$-1\text{k}I_x + 2\text{k}(I_3 - I_1) + 1\text{k}(I_3 - I_4) = 0$$

$$1\text{k}(I_4 - I_3) + 1\text{k}(I_4 - I_2) + 12 = 0$$

where

$$V_x = 2\text{k}(I_3 - I_1)$$

$$I_x = I_4 - I_2$$

Combining these equations yields

$$I_1 = \frac{4}{\text{k}}$$

$$I_1 + I_2 - I_3 = 0$$

$$1\text{k}I_2 + 3\text{k}I_3 - 2\text{k}I_4 = 8$$

$$1\text{k}I_2 + 1\text{k}I_3 - 2\text{k}I_4 = 12$$

In matrix form, the equations are

$$\begin{bmatrix} 1 & 0 & 0 & 0 \\ 1 & 1 & -1 & 0 \\ 0 & 1000 & 3000 & -2000 \\ 0 & 1000 & 1000 & -2000 \end{bmatrix} \begin{bmatrix} I_1 \\ I_2 \\ I_3 \\ I_4 \end{bmatrix} = \begin{bmatrix} 0.004 \\ 0 \\ 8 \\ 12 \end{bmatrix}$$

The MATLAB solution is then

```
>> R = [1 0 0 0;1 1 -1 0;0 1000 3000 -2000;0 1000 1000 -2000]
   R =
        1       0       0       0
        1       1      -1       0
        0    1000    3000   -2000
        0    1000    1000   -2000

>> V = [0.004;0;8;12]
   V =
         0.0040
              0
         8.0000
        12.0000
```

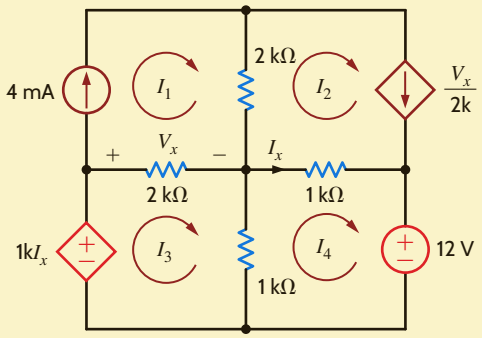

Figure 3.27
Circuit used in Example 3.19.

```
>> I = inv(R)*V
   I =
        0.0040
       -0.0060
       -0.0020
       -0.0100
```

or

$I_1 = 4.0$ mA
$I_2 = 6.0$ mA
$I_3 = -2.0$ mA
$I_4 = -1.0$ mA

EXAMPLE 3.20

At this point, we will again examine the circuit in Example 3.10 and analyze it using loop equations. Recall that because the network has two voltage sources, the nodal analysis was somewhat simplified. In a similar manner, the presence of the current sources should simplify a loop analysis.

Clearly, the network has four loops, and thus four linearly independent equations are required to determine the loop currents. The network is redrawn in **Fig. 3.28** where the loop currents are specified. Note that we have drawn one current through each of the independent current sources. This choice of currents simplifies the analysis since two of the four equations are

$$I_1 = 2/\text{k}$$
$$I_3 = -2/\text{k}$$

The two remaining KVL equations for loop currents I_2 and I_4 are

$$-2V_x + 1\text{k}I_2 + (I_2 - I_3)1\text{k} = 0$$
$$(I_4 + I_3 - I_1)1\text{k} - 2V_x + 1\text{k}I_4 + 4 = 0$$

where

$$V_x = 1\text{k}(I_1 - I_3 - I_4)$$

Substituting the equations for I_1 and I_3 into the two KVL equations yields

$$2\text{k}I_2 + 2\text{k}I_4 = 6$$
$$4\text{k}I_4 = 8$$

Solving these equations for I_2 and I_4, we obtain

$$I_4 = 2 \text{ mA}$$
$$I_2 = 1 \text{ mA}$$

and thus

$$V_o = 1\text{V}$$

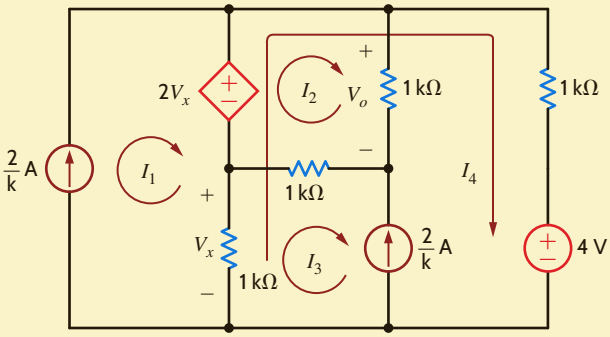

Figure 3.28
Circuit used in Example 3.20.

EXAMPLE 3.21

Let us once again consider Example 3.11. In this case, we will examine the network using loop analysis. Although there are four sources, two of which are dependent, only one of them is a current source. Thus, from the outset we expect that a loop analysis will be more difficult than a nodal analysis. Clearly, the circuit contains six loops. Thus, six linearly independent equations are needed to solve for all the unknown currents.

The network is redrawn in **Fig. 3.29** where the loops are specified. The six KVL equations that describe the network are

$$\begin{aligned}
1\text{k}I_1 + 1\text{k}(I_1 - I_2) + 1\text{k}(I_1 - I_4) &= 0\\
1\text{k}(I_2 - I_1) - 6 + 1\text{k}(I_2 - I_5) &= 0\\
I_3 &= 2I_x\\
-12 + 1\text{k}(I_4 - I_1) + 2V_x &= 0\\
-2V_x + 1\text{k}(I_5 - I_2) + 1\text{k}(I_5 - I_o) &= 0\\
1\text{k}(I_o - I_5) + 1\text{k}(I_o - I_3) + 1\text{k}I_o &= 0
\end{aligned}$$

The control variables for the two dependent sources are

$$\begin{aligned}
V_x &= -1\text{k}I_1\\
I_x &= I_5 - I_o
\end{aligned}$$

Substituting the control parameters into the six KVL equations yields

$$\begin{array}{rrrrrrcl}
3I_1 & -I_2 & 0 & -I_4 & 0 & 0 & = & 0\\
-I_1 & +2I_2 & 0 & 0 & -I_5 & 0 & = & 6/\text{k}\\
0 & 0 & I_3 & 0 & -2I_5 & +2I_o & = & 0\\
-3I_1 & 0 & 0 & +I_4 & 0 & 0 & = & 12/\text{k}\\
2I_1 & -I_2 & 0 & 0 & +2I_5 & -I_o & = & 0\\
0 & 0 & 0 & 0 & -3I_5 & +5I_o & = & 0
\end{array}$$

In matrix form, the equations are

$$\begin{bmatrix}
3 & -1 & 0 & -1 & 0 & 0\\
-1 & 2 & 0 & 0 & -1 & 0\\
0 & 0 & 1 & 0 & -2 & 2\\
-3 & 0 & 0 & 1 & 0 & 0\\
2 & -1 & 0 & 0 & 2 & -1\\
0 & 0 & 0 & 0 & -3 & 5
\end{bmatrix}
\begin{bmatrix} I_1\\ I_2\\ I_3\\ I_4\\ I_5\\ I_6 \end{bmatrix}
=
\begin{bmatrix} 0\\ 0.006\\ 0\\ 0.012\\ 0\\ 0 \end{bmatrix}$$

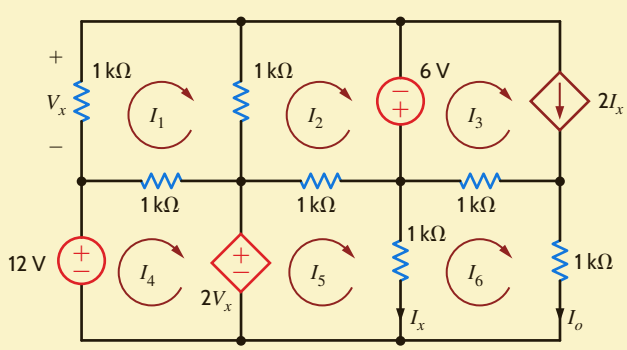

Figure 3.29
Circuit used in Example 3.21.

The MATLAB solution is then

```
>> R = [3 -1 0 -1 0 0;-1 2 0 0 -1 0;0 0 1 0 -2 2;-3 0 0 1
0 0;2 -1 0 0 2 -1;0 0 0 0 -3 5]
   R =
         3   -1    0   -1    0    0
        -1    2    0    0   -1    0
         0    0    1    0   -2    2
        -3    0    0    1    0    0
         2   -1    0    0    2   -1
         0    0    0    0   -3    5

>> V = [0;0.006;0;0.012;0;0]
   V =
              0
         0.0060
              0
         0.0120
              0
              0

>> I = inv(R)*V
   I =
         0.0500
        -0.0120
        -0.0640
         0.1620
        -0.0800
        -0.0480
```

or

$I_1 = 50.0$ mA
$I_2 = -12.0$ mA
$I_3 = -64.0$ mA
$I_4 = 162.0$ mA
$I_5 = -80.0$ mA
$I_6 = -48.0$ mA

As a final point, it is very important to examine the circuit carefully before selecting an analysis approach. One method could be much simpler than another, and a little time invested up front may save a lot of time in the long run. For an N-node circuit, $N - 1$ linearly independent equations must be formulated to solve for $N - 1$ node voltages. An N-loop circuit requires the formulation of N linearly independent equations. One consideration in the selection of a method should be the number of linearly independent equations that must be formulated. The same circuit was solved in Example 3.10 using nodal analysis and in Example 3.20 using loop analysis. The circuit in Fig. 3.16 has four unknown node voltages. As a result, four linearly independent equations are required. Because there are two voltage sources, two constraint equations are needed. It was pointed out in Example 3.20 that this same circuit has four loops, which requires four linearly independent equations. The two current sources produce two constraint equations.

The effort required to solve this circuit using either nodal or loop analysis is similar. However, this is not true for many circuits. Consider the circuit in **Fig. 3.30**. This circuit has eight loops. Selection of the loop currents such that only one loop current flows through the independent current source leaves us with seven unknown loop currents. Since this circuit has seven nodes, there are six node voltages, and we must formulate six linearly independent equations. By judicious selection of the bottom node as the reference node, four of the node

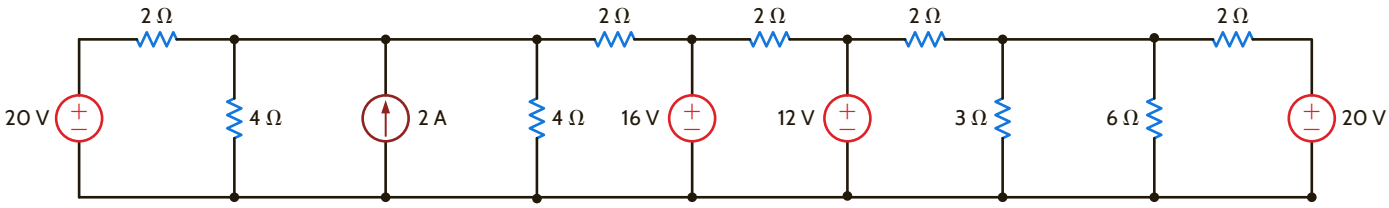

Figure 3.30

A circuit utilized in a discussion of the selection of an analysis technique.

voltages are known, leaving just two unknown node voltages—the node voltage across the current source and the node voltage across the 3-Ω and 6-Ω resistors. Applying KCL at these two nodes yields two equations that can be solved for the two unknown node voltages. Even with the use of a modern calculator or a computer program such as MATLAB, the solution of two simultaneous equations requires less effort than the solution of the seven simultaneous equations that the loop analysis would require.

PROBLEM-SOLVING STRATEGY

LOOP ANALYSIS

STEP 1. Determine the number of independent loops in the circuit. Assign a loop current to each independent loop. For an N-loop circuit, there are N-loop currents. As a result, N linearly independent equations must be written to solve for the loop currents.

If current sources are present in the circuit, either of two techniques can be employed. In the first case, one loop current is selected to pass through one of the current sources. The remaining loop currents are determined by open-circuiting the current sources in the circuit and using this modified circuit to select them. In the second case, a current is assigned to each mesh in the circuit.

STEP 2. Write a constraint equation for each current source—independent or dependent—in the circuit in terms of the assigned loop current using KCL. Each constraint equation represents one of the necessary linearly independent equations, and N_I current sources yield N_I linearly independent equations. For each dependent current source, express the controlling variable for that source in terms of the loop currents.

STEP 3. Use KVL to formulate the remaining $N - N_I$ linearly independent equations. Treat dependent voltage sources like independent voltage sources when formulating the KVL equations. For each dependent voltage source, express the controlling variable in terms of the loop currents.

LEARNING ASSESSMENTS

E3.19 Use mesh analysis to find V_o in the circuit in Fig. E3.19.

ANSWER:
$V_o = 12$ V.

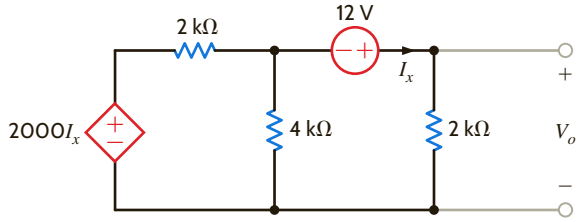

Figure E3.19

E3.20 Use loop analysis to solve the network in Example 3.5 and compare the time and effort involved in the two solution techniques.

E3.21 Use nodal analysis to solve the circuit in Example 3.15 and compare the time and effort involved in the two solution strategies.

E3.22 Find V_o in Fig. E3.22 using mesh analysis.

ANSWER:
$V_o = 6.97$ V.

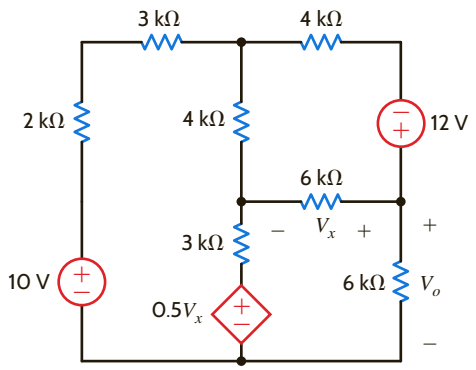

Figure E3.22

E3.23 Find V_o in Fig. E3.23 using mesh analysis.

ANSWER:
$V_o = 9$ V.

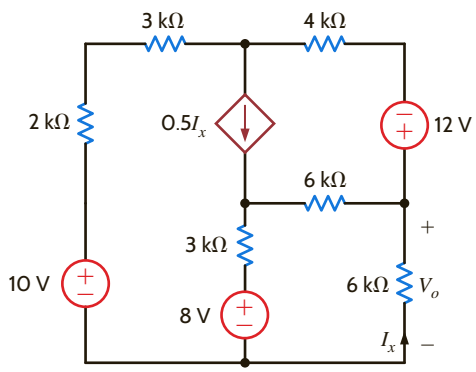

Figure E3.23

SUMMARY

Nodal Analysis for an *N*-node Circuit

- Determine the number of nodes in the circuit. Select one node as the reference node. Assign a node voltage between each nonreference node and the reference node. All node voltages are assumed positive with respect to the reference node. For an N-node circuit, there are $N - 1$ node voltages. As a result, $N - 1$ linearly independent equations must be written to solve for the node voltages.
- Write a constraint equation for each voltage source—independent or dependent—in the circuit in terms of the assigned node voltages using KVL. Each constraint equation represents one of the necessary linearly independent equations, and N_v voltage sources yield N_v linearly independent equations. For each dependent voltage source, express the controlling variable for that source in terms of the node voltages.

  A voltage source—independent or dependent—may be connected between a nonreference node and the reference node or between two nonreference nodes. A supernode is formed by a voltage source and its two connecting nonreference nodes.
- Use KCL to formulate the remaining $N - 1 - N_v$ linearly independent equations. First, apply KCL at each nonreference node not connected to a voltage source. Second, apply KCL at each supernode. Treat dependent current sources like independent current sources when formulating the KCL equations. For each dependent current source, express the controlling variable in terms of the node voltages.

Loop Analysis for an *N*-loop Circuit

- Determine the number of independent loops in the circuit. Assign a loop current to each independent loop. For an N-loop circuit, there are N-loop currents. As a result, N linearly independent equations must be written to solve for the loop currents.
- If current sources are present in the circuit, either of two techniques can be employed. In the first case, one loop current

is selected to pass through one of the current sources. The remaining loop currents are determined by open-circuiting the current sources in the circuit and using this modified circuit to select them. In the second case, a current is assigned to each mesh in the circuit.

- Write a constraint equation for each current source—independent or dependent—in the circuit in terms of the assigned loop currents using KCL. Each constraint equation represents one of the necessary linearly independent equations, and N_I current sources yield N_I linearly independent equations. For each dependent current source, express the controlling variable for that source in terms of the loop currents.
- Use KVL to formulate the remaining $N - N_I$ linearly independent equations. Treat dependent voltage sources like independent voltage sources when formulating the KVL equations. For each dependent voltage source, express the controlling variable in terms of the loop currents.

PROBLEMS

3.1 Use nodal analysis to find V_1 in the circuit in Fig. P3.1.

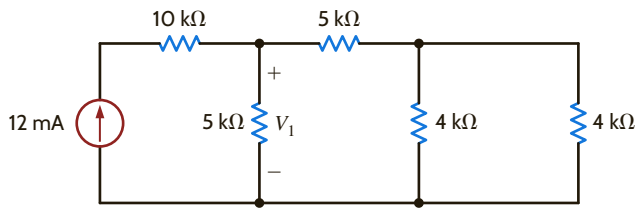

Figure P3.1

3.2 Find both I_o and V_o in the network in Fig. P3.2 using nodal analysis.

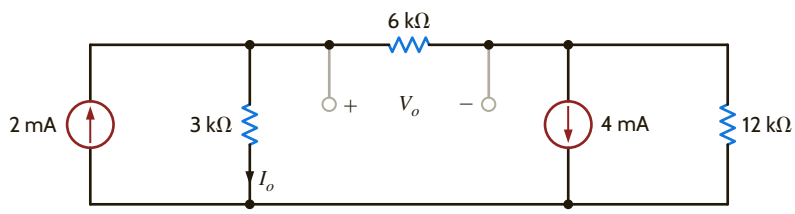

Figure P3.2

3.3 Find I_1 in the network in Fig. P3.3.

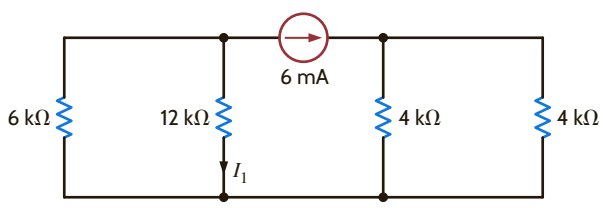

Figure P3.3

3.4 Find I_1 in the circuit in Fig. P3.4.

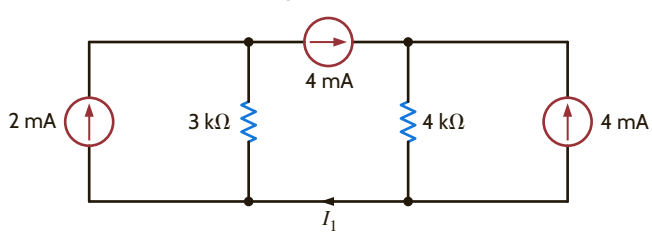

Figure P3.4

3.5 Use nodal analysis to find V_1 in the circuit in Fig P3.5.

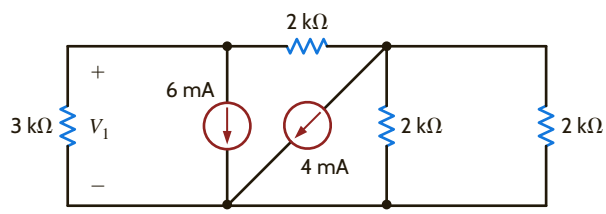

Figure P3.5

3.6 Find V_1 and V_2 in the circuit in Fig. P3.6 using nodal analysis.

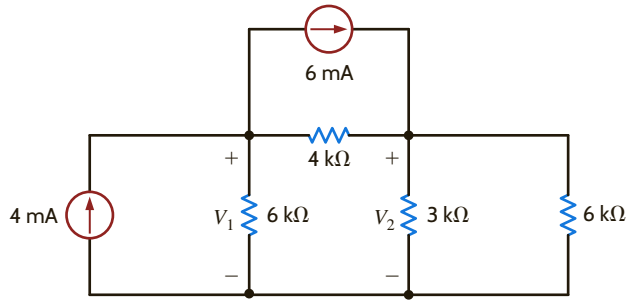

Figure P3.6

3.7 Use nodal analysis to find both V_1 and V_o in the circuit in Fig P3.7.

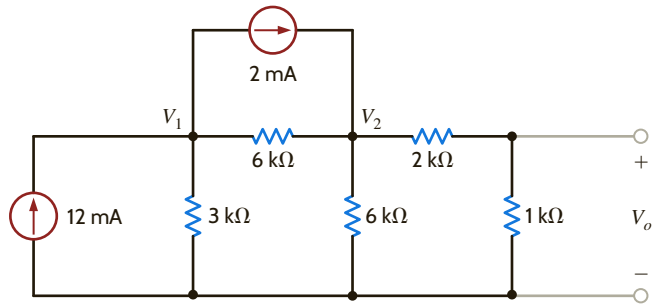

Figure P3.7

3.8 Write the node equations for the circuit in Fig. P3.8 in matrix form, and find all the node voltages.

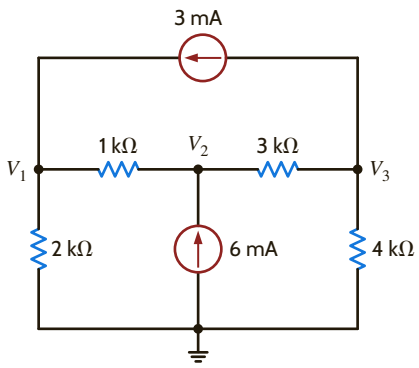

Figure P3.8

3.9 Find V_o in the network in Fig. P3.9.

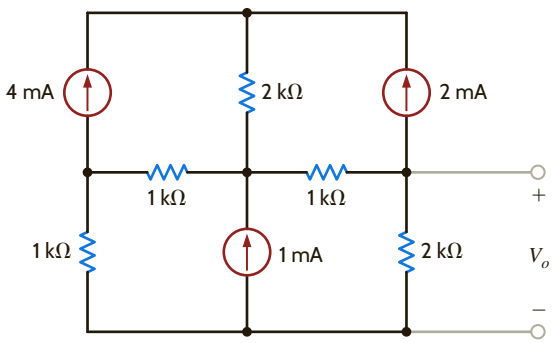

Figure P3.9

3.10 Find I_o in the circuit in Fig. P3.10 using nodal analysis.

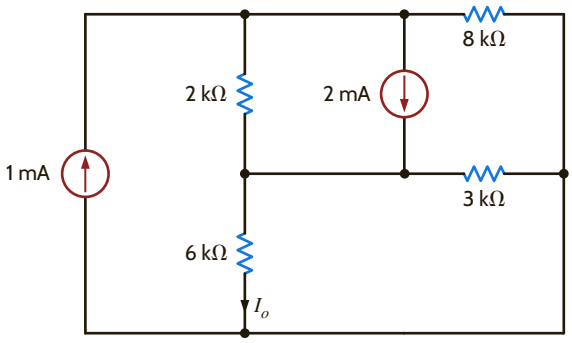

Figure P3.10

3.11 Use nodal analysis to find I_o in the network in Fig. P3.11.

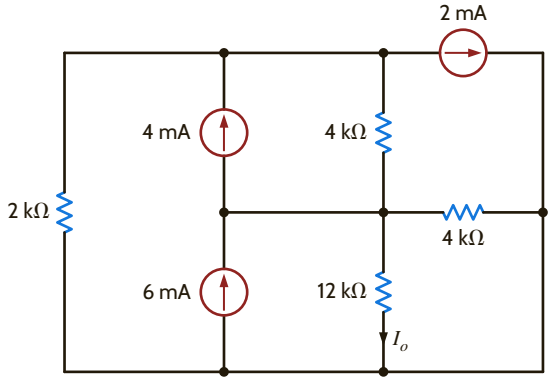

Figure P3.11

3.12 Use nodal analysis to find V_o in the circuit in Fig. P3.12.

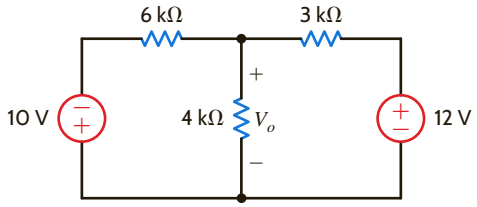

Figure P3.12

3.13 Find V_o in the network in Fig. P3.13 using nodal analysis.

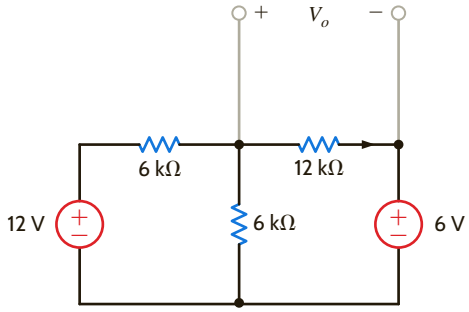

Figure P3.13

3.14 Use nodal analysis to find V_o in the circuit in Fig. P3.14.

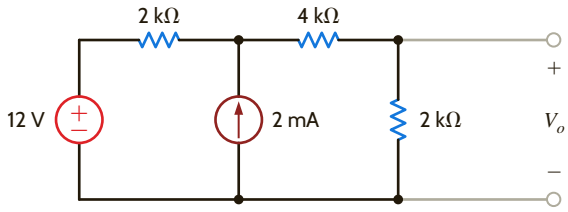

Figure P3.14

3.15 Find I_o in the network in Fig. P3.15 using nodal analysis.

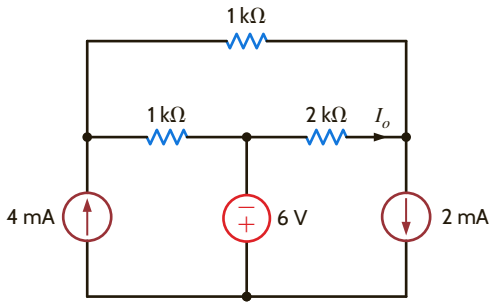

Figure P3.15

3.16 Use nodal analysis to find V_o in the circuit in Fig. P3.16.

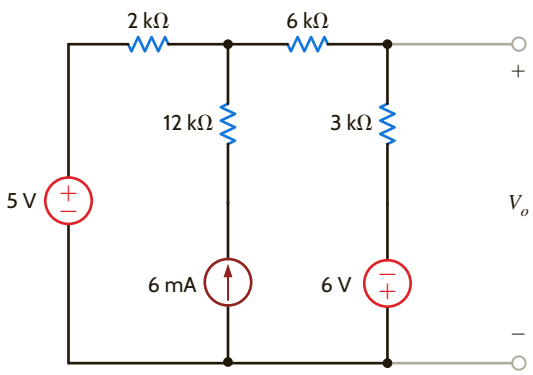

Figure P3.16

3.17 Use nodal analysis to find V_o in the network in Fig. P3.17.

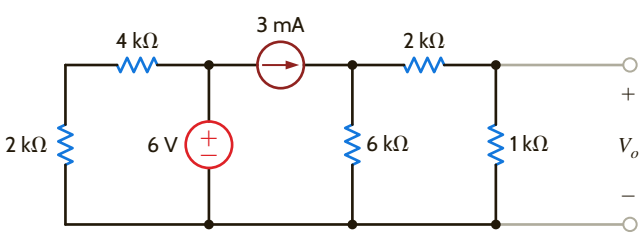

Figure P3.17

3.18 Use nodal analysis to find V_o in the circuit in Fig. P3.18.

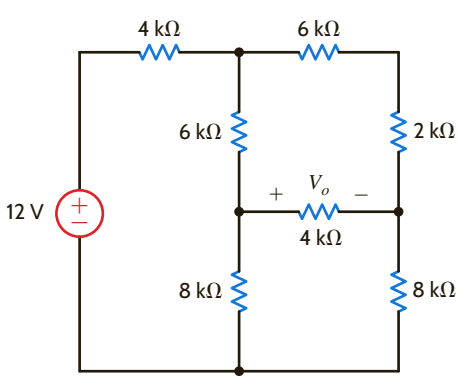

Figure P3.18

3.19 Find V_o in the circuit in Fig. P3.19 using nodal analysis.

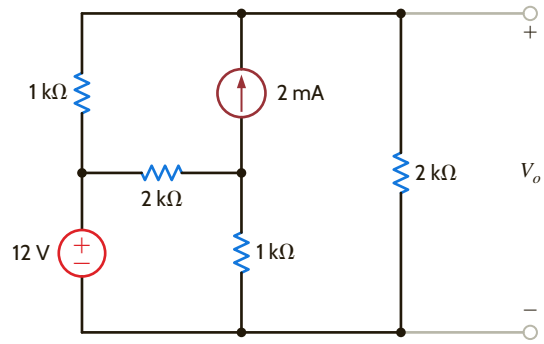

Figure P3.19

3.20 Find V_o in the network in Fig. P3.20 using nodal analysis.

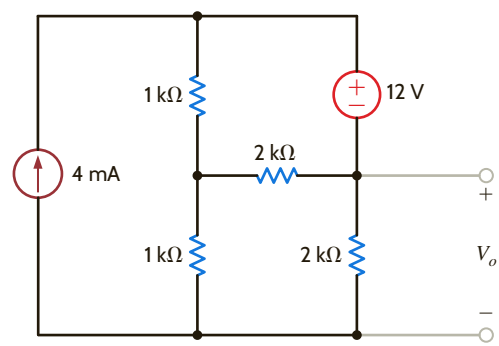

Figure P3.20

3.21 Find V_o in the network in Fig. P3.21 using nodal analysis.

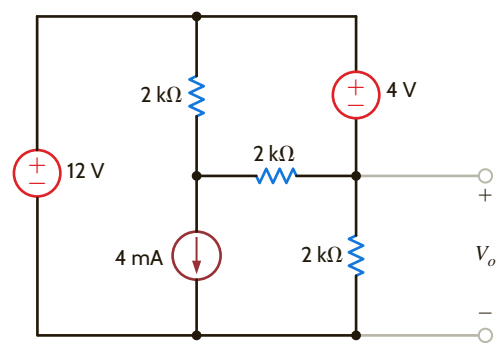

Figure P3.21

3.22 Find I_o in the circuit in Fig. P3.22 using nodal analysis.

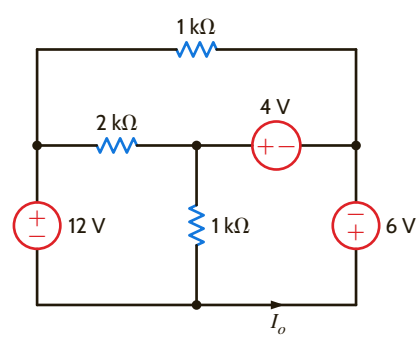

Figure P3.22

3.23 Use nodal analysis to determine the node voltages defined in the circuit in Fig. P3.23.

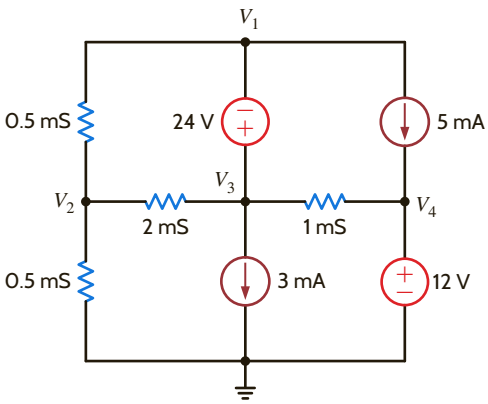

Figure P3.23

3.24 Use nodal analysis to find V_o in the network in Fig. P3.24.

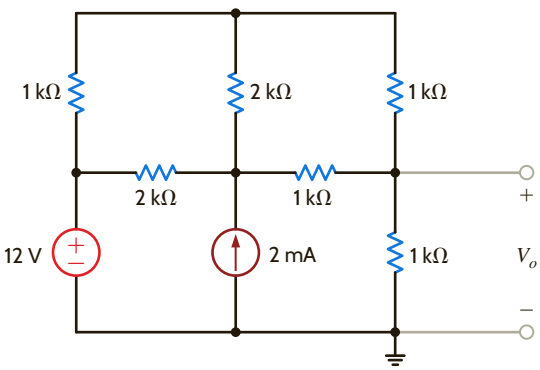

Figure P3.24

3.25 Use nodal analysis to find V_o in the circuit in Fig. P3.25.

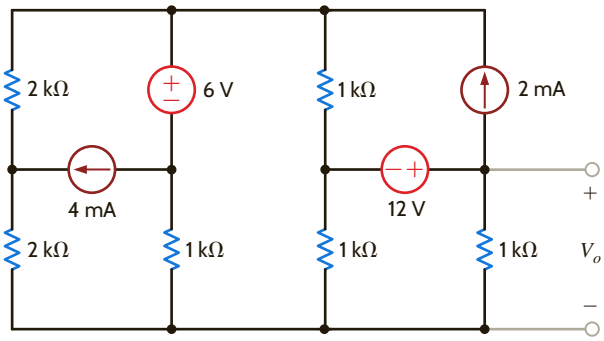

Figure P3.25

3.26 Use nodal analysis to solve for the node voltages in the circuit in Fig. P3.26. Also calculate the power supplied by the 1-A current source.

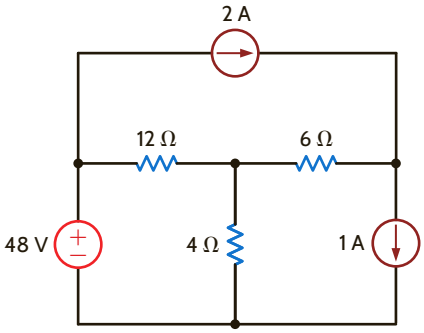

Figure P3.26

3.27 Find V_o in the network in Fig. P3.27 using nodal equations.

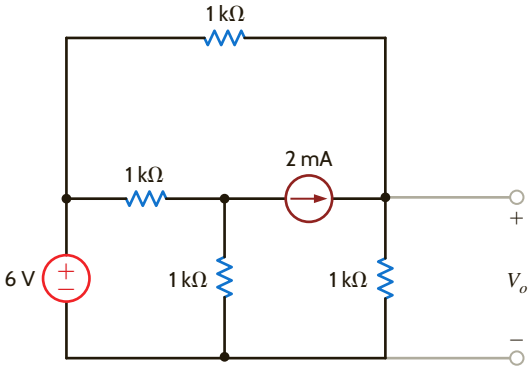

Figure P3.27

3.28 Find I_o in the network in Fig. P3.28 using nodal analysis.

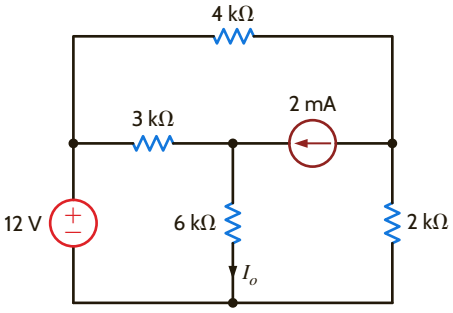

Figure P3.28

3.29 Use nodal analysis to find I_o in the circuit in Fig. P3.29.

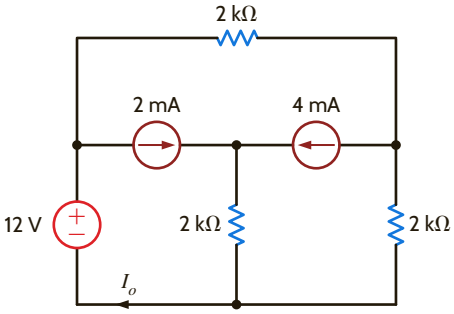

Figure P3.29

3.30 Find V_o in the circuit in Fig. P3.30 using nodal analysis.

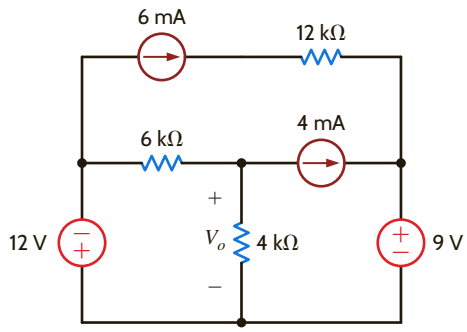

Figure P3.30

3.31 Find I_o in the circuit in Fig. P3.31 using nodal analysis.

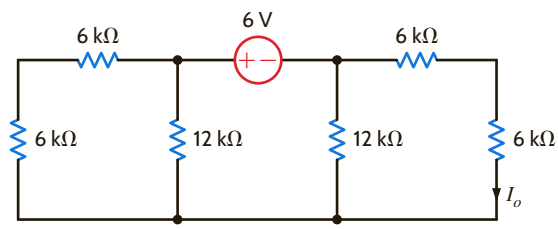

Figure P3.31

3.32 Use nodal analysis to find I_o in the circuit in Fig. P3.32.

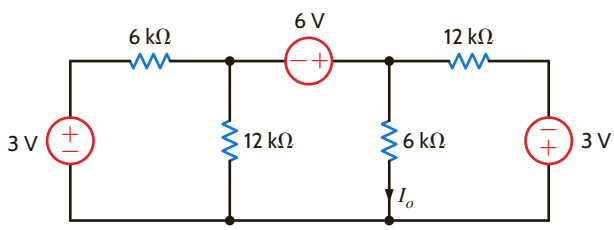

Figure P3.32

3.33 Using nodal analysis, find V_o in the network in Fig. P3.33.

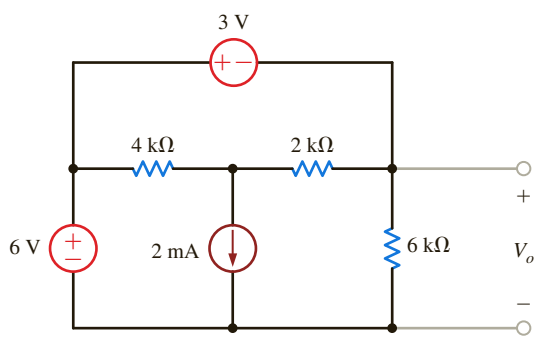

Figure P3.33

3.34 Find V_o in the network in Fig. P3.34 using nodal analysis.

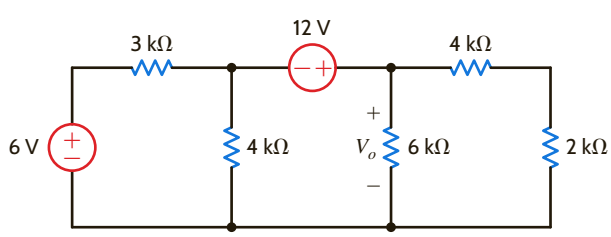

Figure P3.34

3.35 Find V_o in the circuit in Fig. P3.35 using nodal analysis.

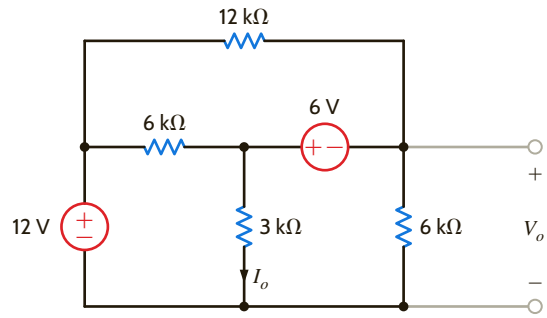

Figure P3.35

3.36 Find V_o in the circuit in Fig. P3.36 using nodal analysis.

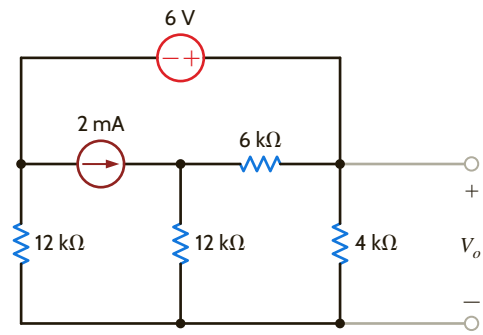

Figure P3.36

3.37 Use nodal analysis to find V_o in the circuit in Fig. P3.37.

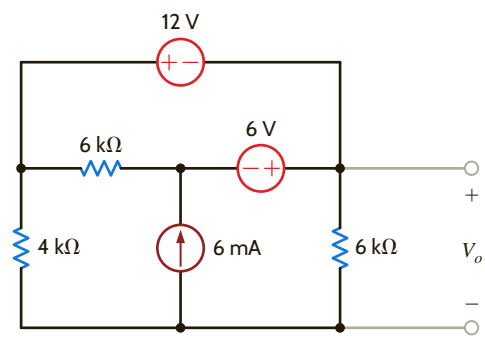

Figure P3.37

3.38 Find V_o in the circuit in Fig. P3.38 using nodal analysis.

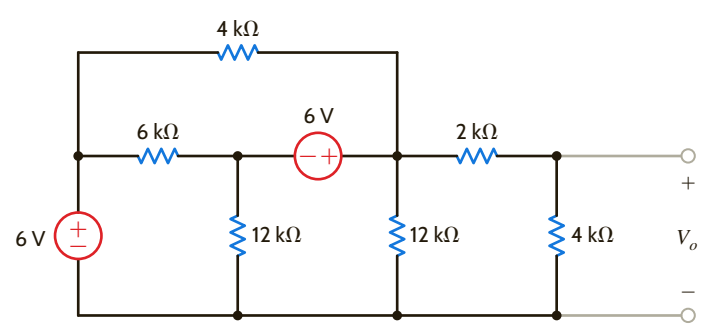

Figure P3.38

3.39 Find V_o in the circuit in Fig. P3.39 using nodal analysis.

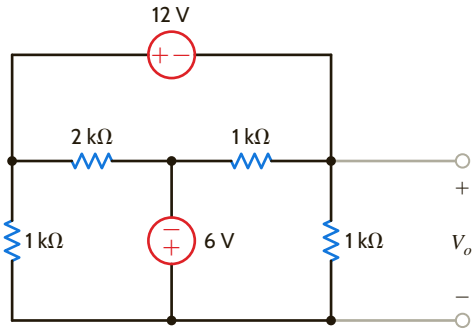

Figure P3.39

3.40 Use nodal analysis to find V_o in the circuit in Fig. P3.40.

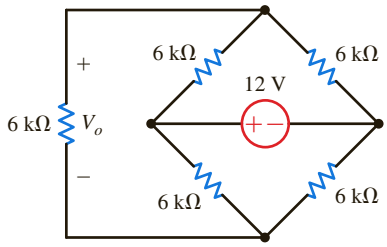

Figure P3.40

3.41 Find V_o in the network in Fig. P3.41.

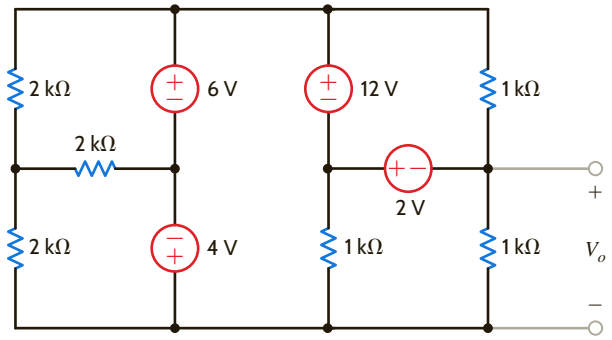

Figure P3.41

3.42 Find I_o in the network in Fig. P3.42 using nodal analysis.

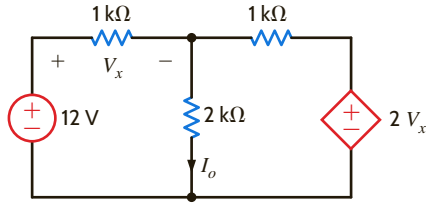

Figure P3.42

3.43 Find V_o in the network in Fig. P3.43 using nodal analysis.

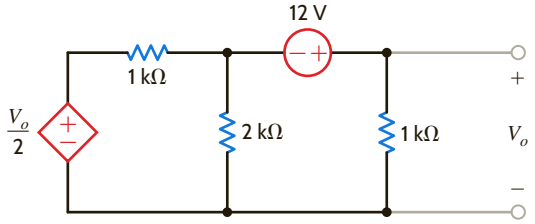

Figure P3.43

3.44 Find I_o in the network in Fig. P3.44 using nodal analysis.

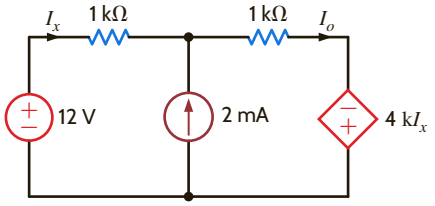

Figure P3.44

3.45 Find V_o in the network in Fig. P3.45 using nodal analysis.

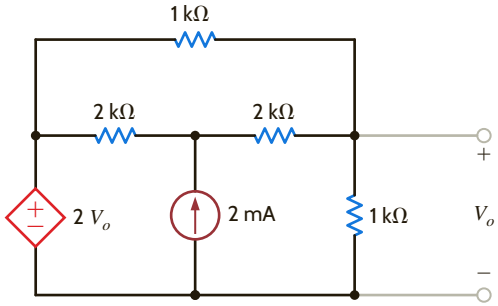

Figure P3.45

3.46 Find V_o in the circuit in Fig. P3.46 using nodal analysis.

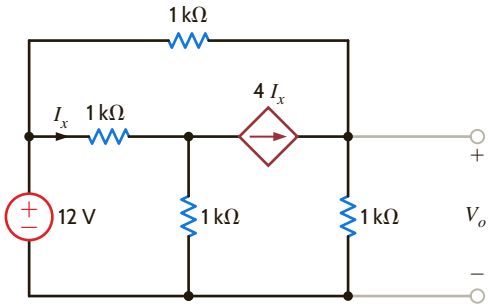

Figure P3.46

3.47 Find I_o in the network in Fig. P3.47 using nodal analysis.

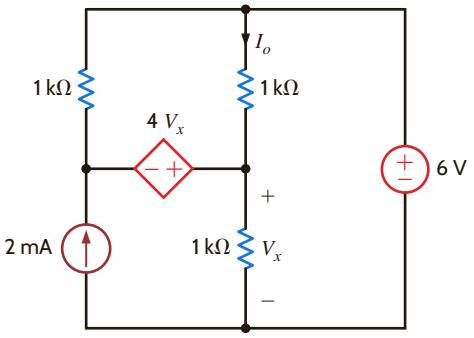

Figure P3.47

3.48 Use nodal analysis to find V_o in the circuit in Fig. P3.48.

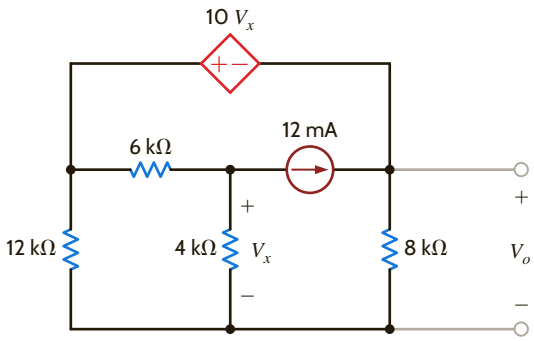

Figure P3.48

3.49 Find V_o in the network in Fig. P3.49 using nodal analysis.

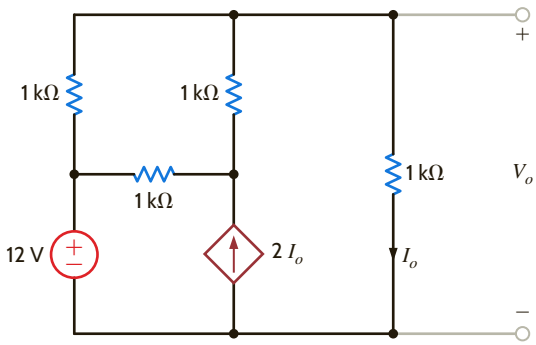

Figure P3.49

3.50 Find V_o in the network in Fig. P3.50 using nodal analysis.

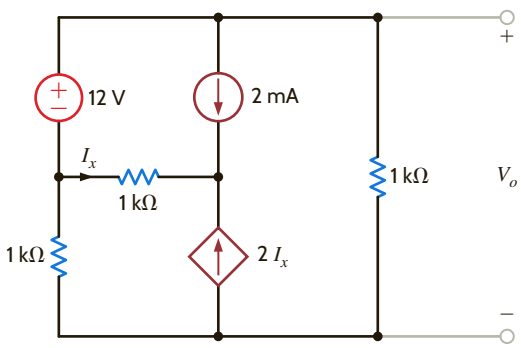

Figure P3.50

3.51 Find V_o in the circuit in Fig. P3.51.

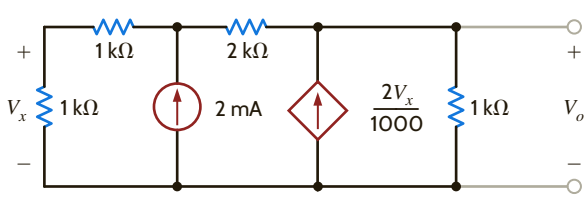

Figure P3.51

3.52 Use nodal analysis to find V_o in the circuit in Fig. P3.52. In addition, find all branch currents and check your answers using KCL at every node.

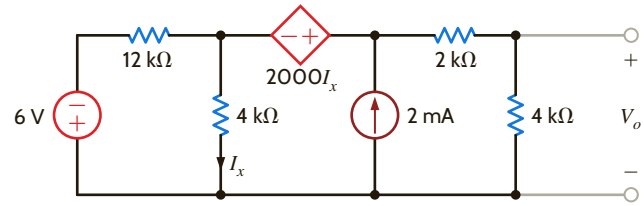

Figure P3.52

3.53 Determine V_o in the network in Fig. P3.53 using nodal analysis.

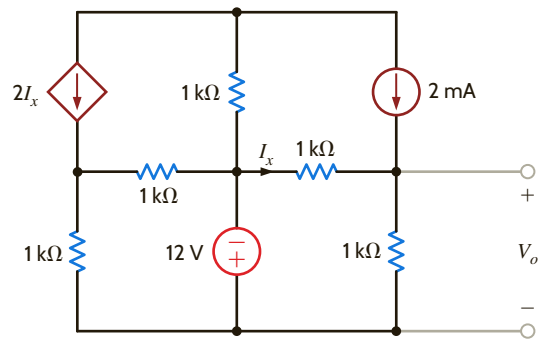

Figure P3.53

3.54 Use nodal analysis to find V_o in the circuit in Fig. P3.54.

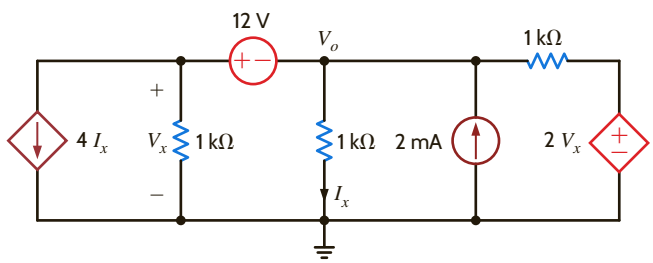

Figure P3.54

3.55 Use nodal analysis to find V_o in the circuit in Fig. P3.55.

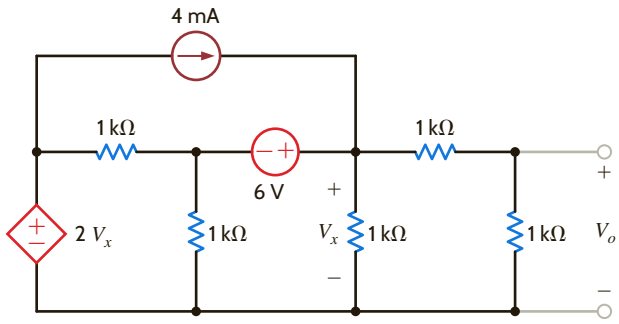

Figure P3.55

3.56 Find I_o in the circuit in Fig. P3.56 using nodal analysis.

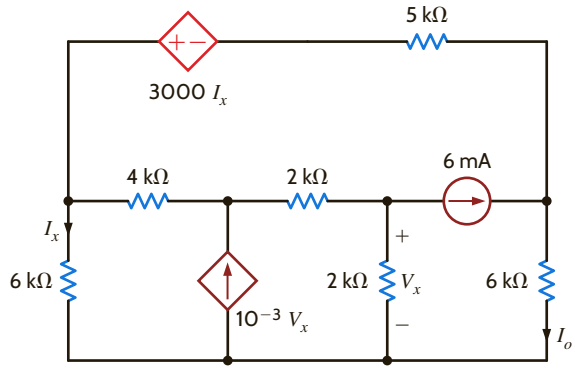

Figure P3.56

3.57 Use nodal analysis to solve for I_A in the network in Fig. P3.57.

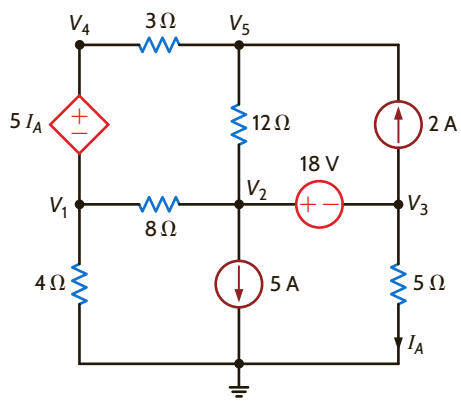

Figure P3.57

3.58 Use nodal analysis to find V_o in the circuit in Fig. P3.58.

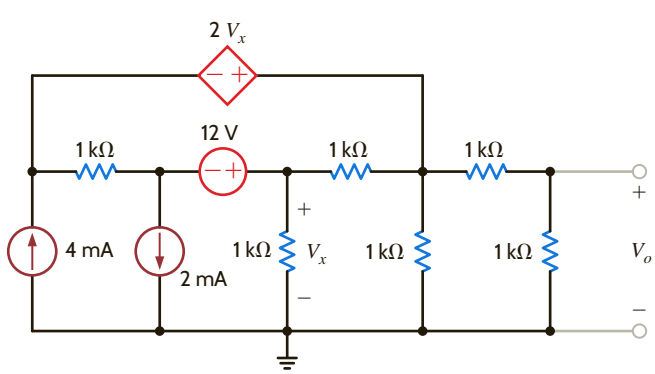

Figure P3.58

3.59 Use nodal analysis to find V_1, V_2, V_3, and V_4 in the network in Fig. P3.59.

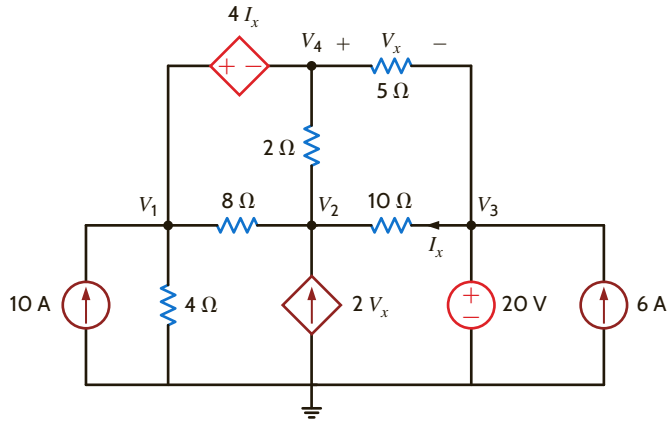

Figure P3.59

3.60 Determine V_o in the network in Fig. P3.60 using nodal analysis.

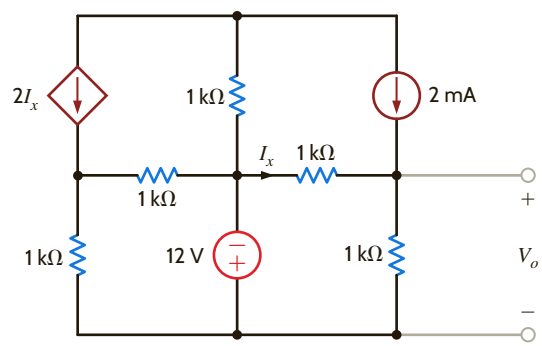

Figure P3.60

3.61 Use nodal analysis to find V_1, V_2, V_3, and V_4 in the circuit in Fig. P3.61.

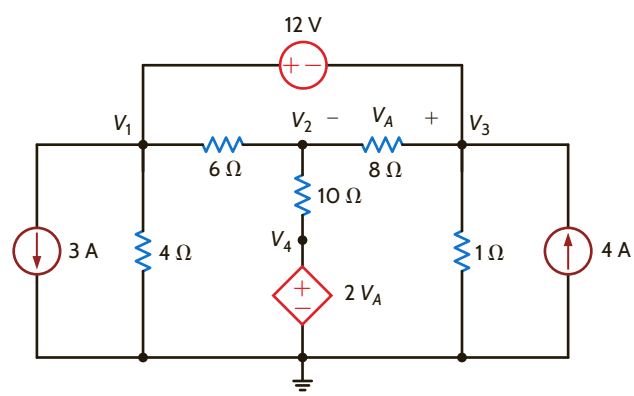

Figure P3.61

3.62 Use nodal analysis to determine the node voltages defined in the circuit in Fig. P3.62.

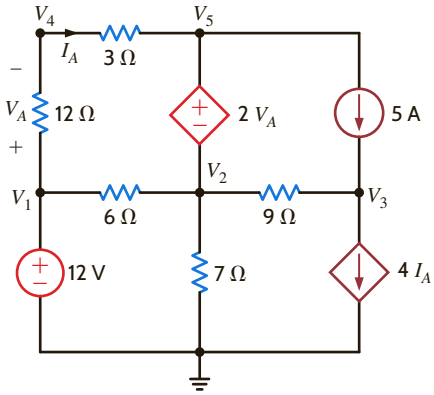

Figure P3.62

3.63 Use nodal analysis to determine the node voltages defined in the circuit in Fig. P3.63.

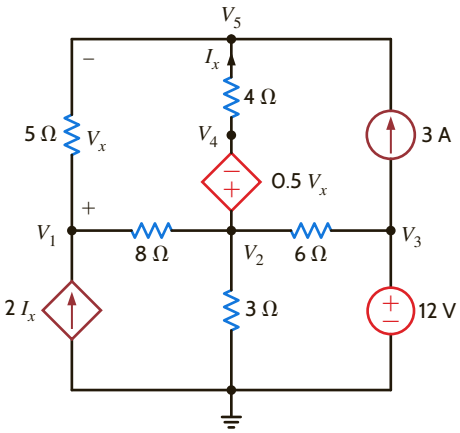

Figure P3.63

3.64 Use nodal analysis to determine the node voltages defined in the circuit in Fig. P3.64.

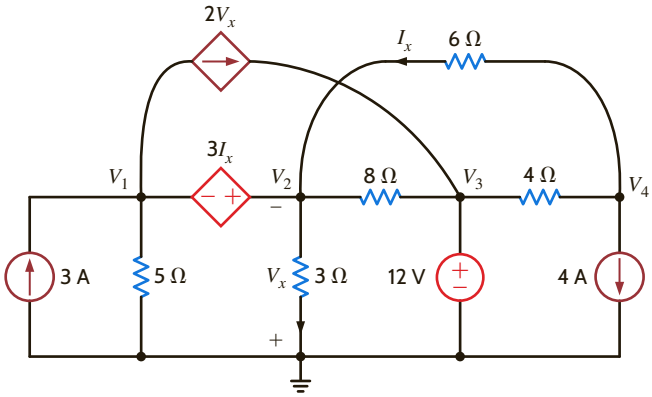

Figure P3.64

3.65 Find I_o in the network in Fig. P3.65 using mesh analysis.

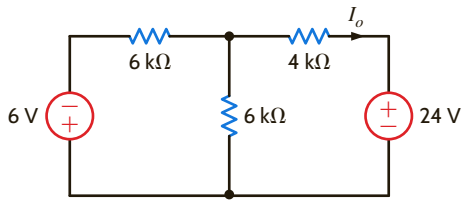

Figure P3.65

3.66 Find V_o in the network in Fig. P3.66 using mesh analysis.

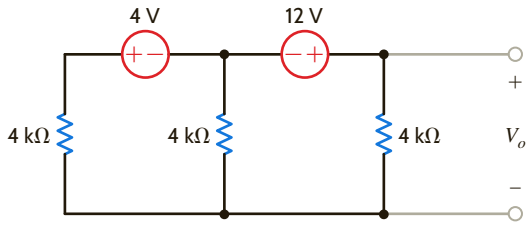

Figure P3.66

3.67 Find V_o in the network in Fig. P3.67 using mesh equations.

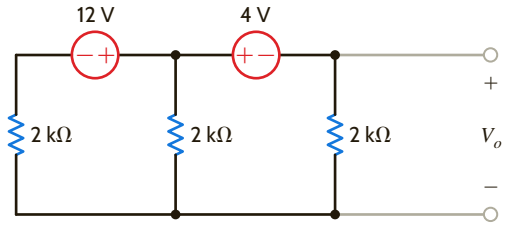

Figure P3.67

3.68 Find I_o in the circuit in Fig. P3.68 using mesh analysis.

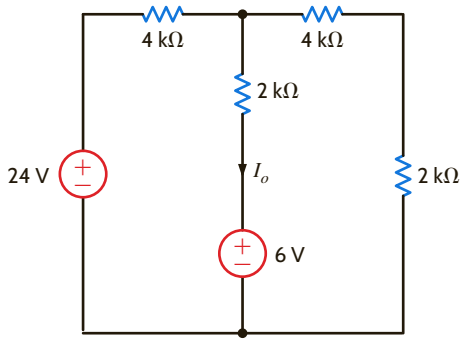

Figure P3.68

3.69 Use mesh analysis to find V_o in the circuit in Fig. P3.69.

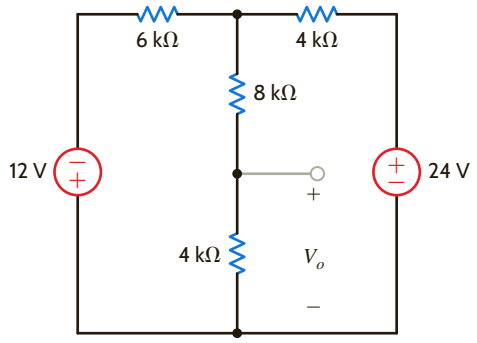

Figure P3.69

3.70 Find I_o in the circuit in Fig. P3.70 using mesh analysis.

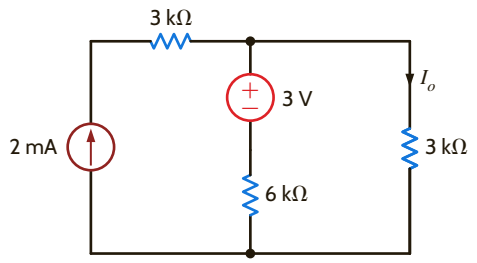

Figure P3.70

3.71 Use mesh analysis to find V_o in the network in Fig. P3.71.

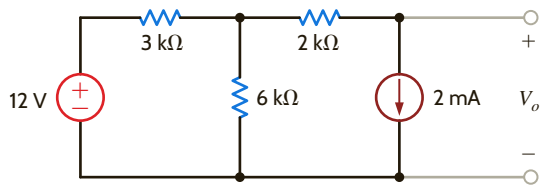

Figure P3.71

3.72 Find I_o in the circuit in Fig. P3.72.

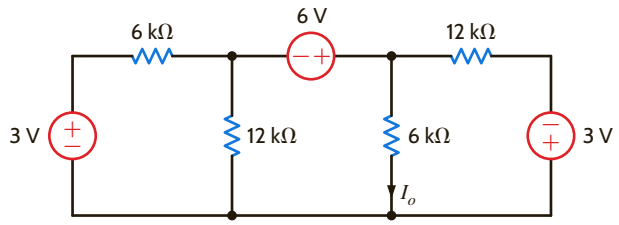

Figure P3.72

3.73 Find V_o in the circuit in Fig. P3.73 using mesh analysis.

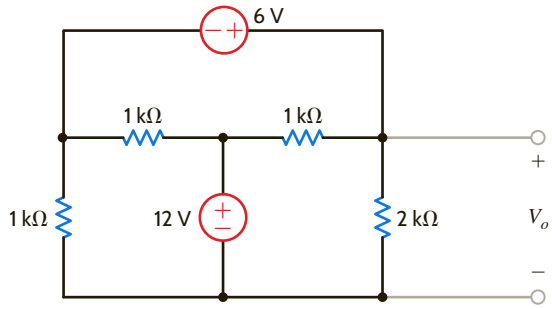

Figure P3.73

3.74 Find V_o in Fig. P3.74 using mesh analysis.

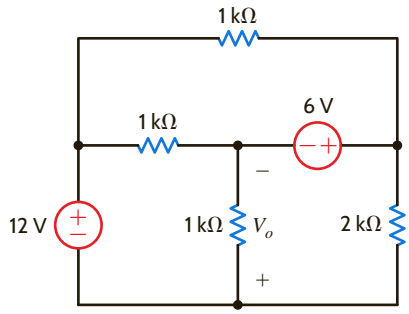

Figure P3.74

3.75 Use loop analysis to find V_o in the network in Fig. P3.75.

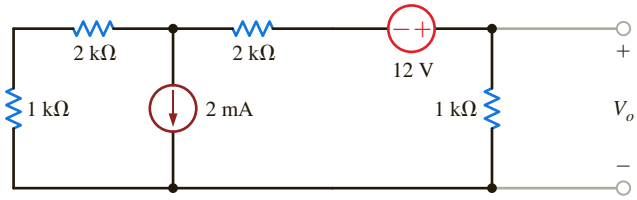

Figure P3.75

3.76 Find I_o in Fig. P3.76 using mesh analysis.

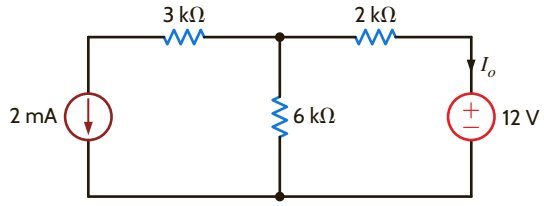

Figure P3.76

3.77 Find V_o in the network in Fig. P3.77 using loop analysis.

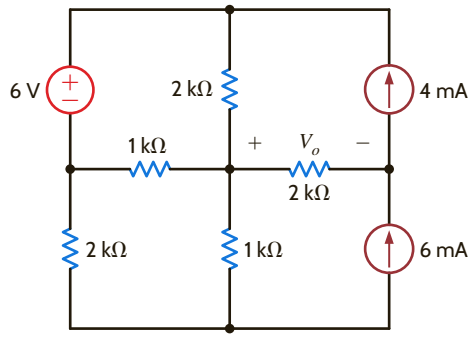

Figure P3.77

3.78 Find I_o in the circuit in Fig. P3.78 using loop analysis.

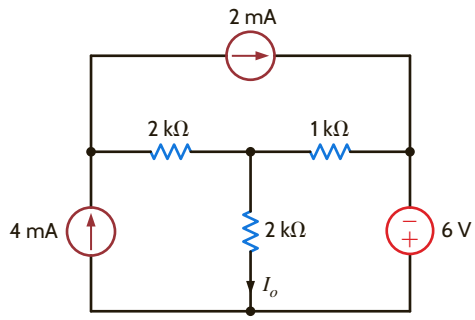

Figure P3.78

3.79 Find V_o in the circuit in Fig. P3.79 using mesh analysis.

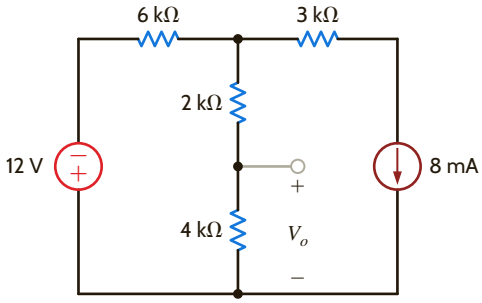

Figure P3.79

3.80 Use mesh analysis to find V_o in the circuit in Fig. P3.80.

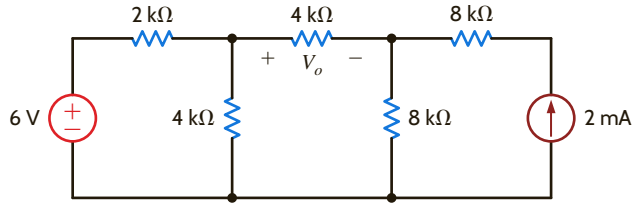

Figure P3.80

3.81 Use mesh analysis to find I_o in the network in Fig. P3.81.

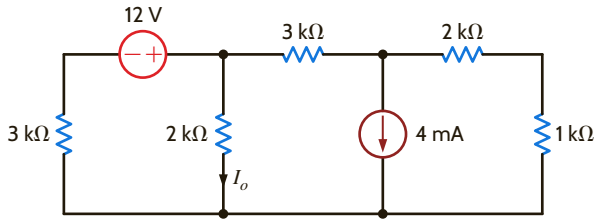

Figure P3.81

3.82 Use loop analysis to find V_o in the circuit in Fig. P3.82.

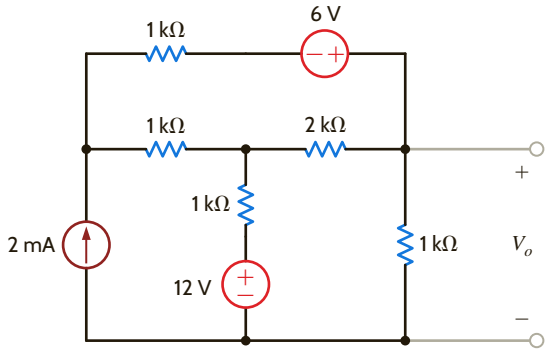

Figure P3.82

3.83 Use loop analysis to calculate the power supplied by the 20-V voltage source in the circuit in Fig. P3.83.

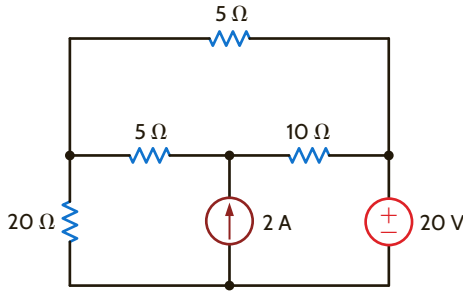

Figure P3.83

3.84 Use loop analysis to find I_o and I_1 in the network in Fig. P3.84.

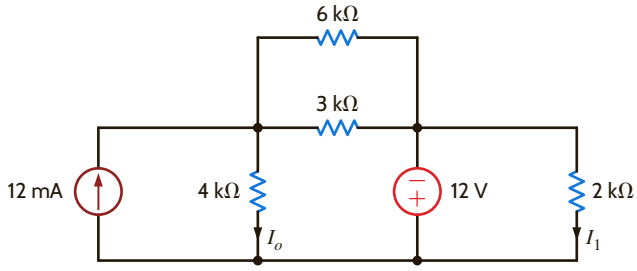

Figure P3.84

3.85 Find V_o in the network in Fig. P3.85 using loop analysis.

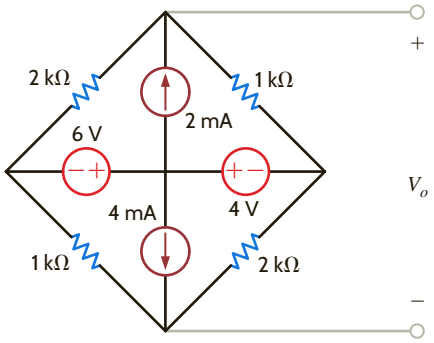

Figure P3.85

3.86 Find V_o in the circuit in Fig. P3.86 using loop analysis.

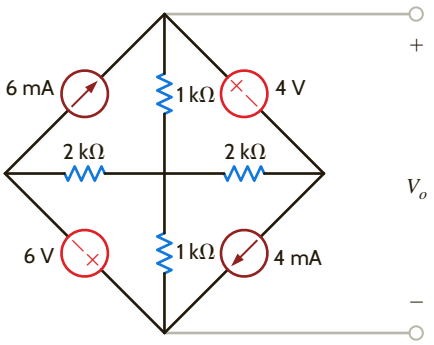

Figure P3.86

3.87 Find I_o in the network in Fig. P3.87 using loop analysis.

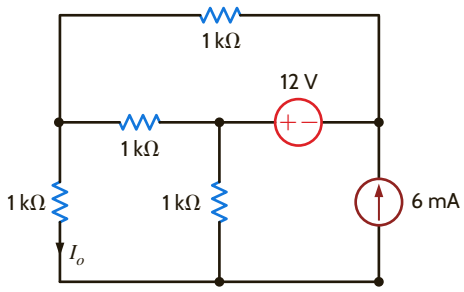

Figure P3.87

3.88 Find I_o in the network in Fig. P3.88 using loop analysis.

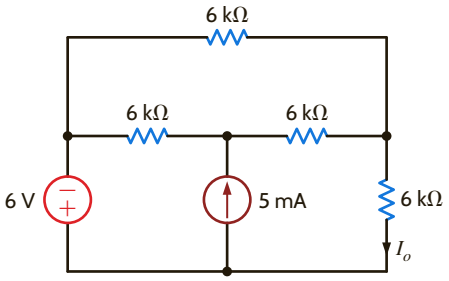

Figure P3.88

3.89 Use loop analysis to find V_o in the circuit in Fig. P3.89.

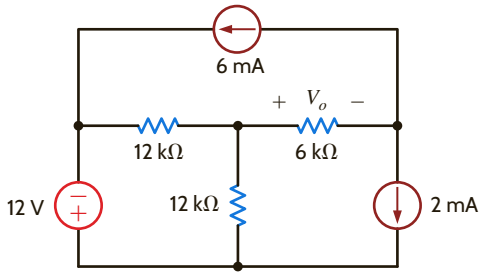

Figure P3.89

3.90 Using loop analysis, find V_o in the network in Fig. P3.90.

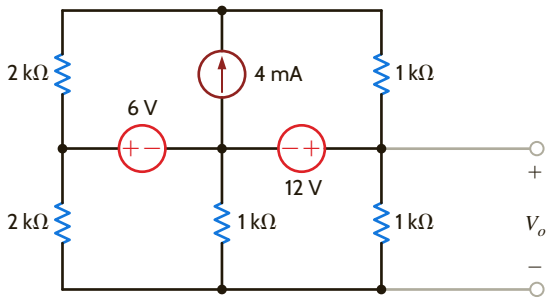

Figure P3.90

3.91 Find I_o in the circuit in Fig. P3.91 using mesh analysis.

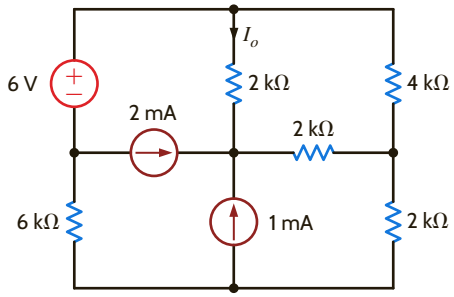

Figure P3.91

3.92 Use loop analysis to find I_o in the network in Fig. P3.92.

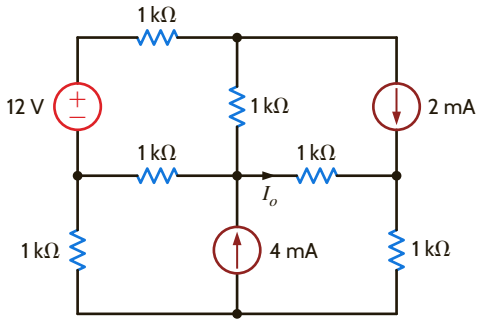

Figure P3.92

3.93 Using loop analysis, find I_o in the circuit in Fig. P3.93.

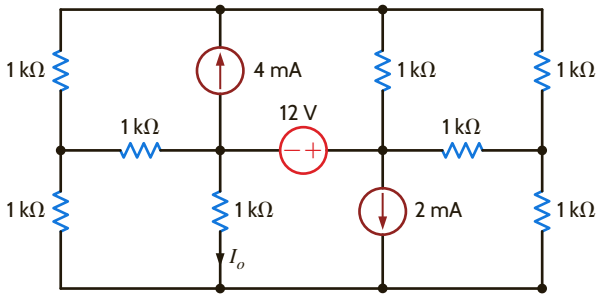

Figure P3.93

3.94 Find the mesh currents in the network in Fig. P3.94.

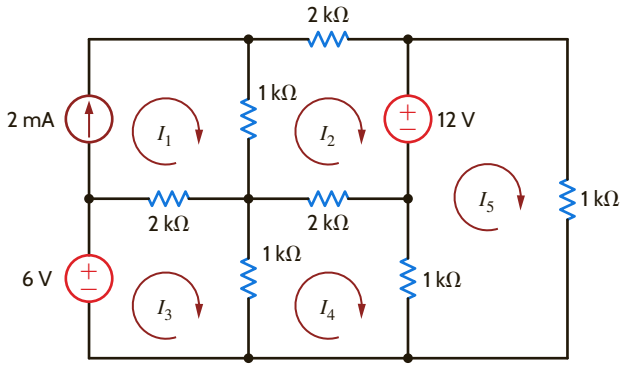

Figure P3.94

3.95 Using loop analysis, find V_o in the circuit in Fig. P3.95.

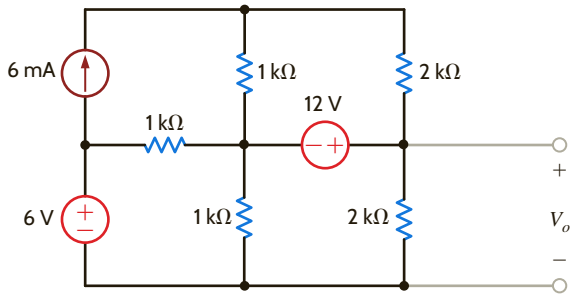

Figure P3.95

3.96 Using loop analysis, find V_o in the network in Fig. P3.96.

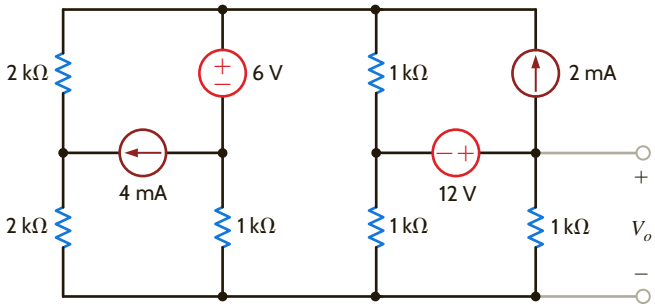

Figure P3.96

3.97 Find I_o in the circuit in Fig. P3.97 using loop analysis.

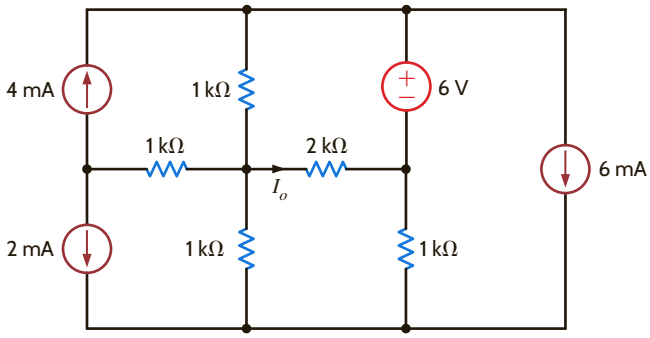

Figure P3.97

3.98 Find I_o in the network in Fig. P3.98 using loop analysis.

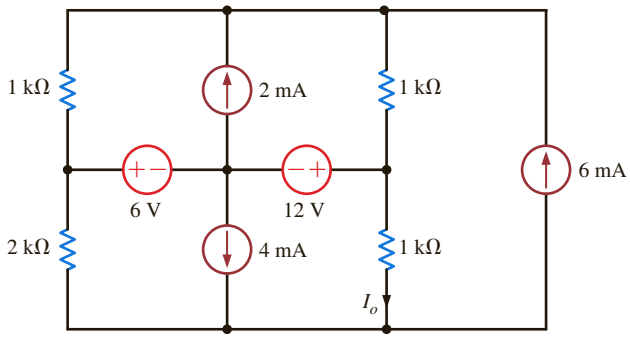

Figure P3.98

3.99 Find V_o in the circuit in Fig. P3.99 using loop analysis.

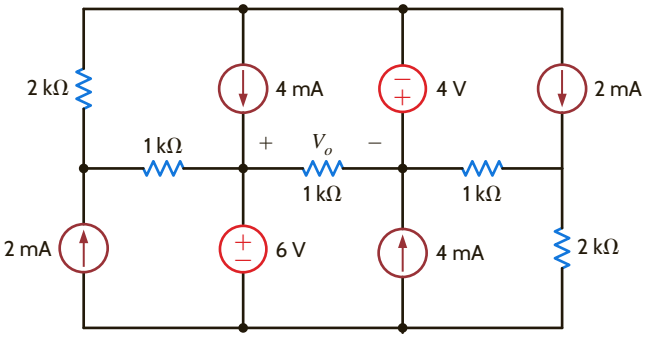

Figure P3.99

3.100 Use nodal analysis to find V_o in Fig. P3.100.

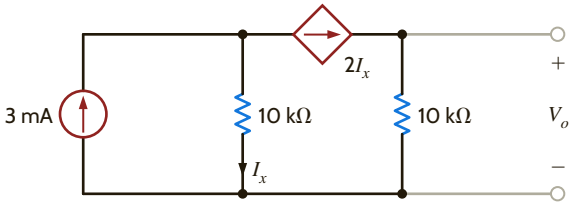

Figure P3.100

3.101 Find V_o in the circuit in Fig. P3.101 using nodal analysis.

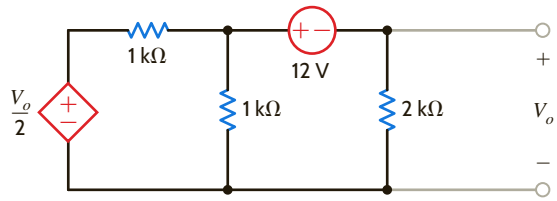

Figure P3.101

3.102 Use loop analysis to find V_o in the network in Fig. P3.102.

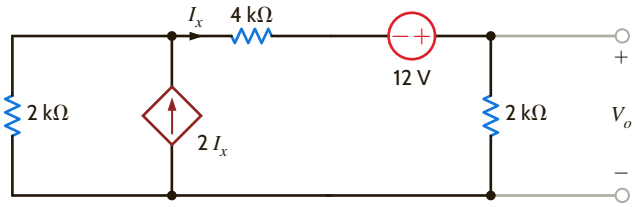

Figure P3.102

3.103 Use nodal analysis to find V_o in the network in Fig. P3.103.

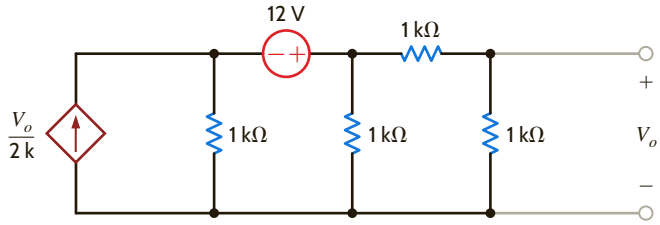

Figure P3.103

3.104 Find V_o in the network in Fig. P3.104 using nodal analysis.

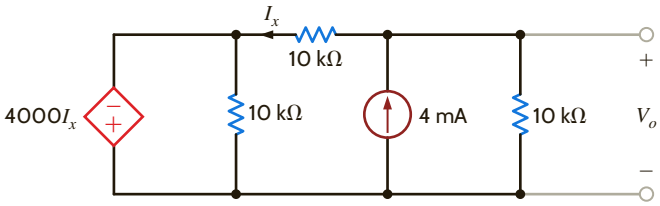

Figure P3.104

3.105 Find the power supplied by the 2-A current source in the network in Fig. P3.105 using loop analysis.

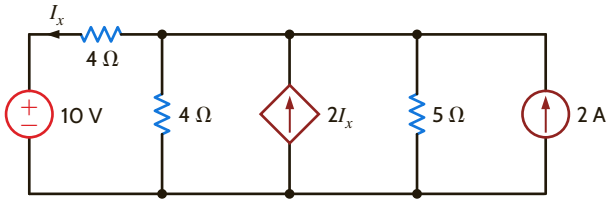

Figure P3.105

3.106 Find I_o in the network in Fig. P3.106 using nodal analysis.

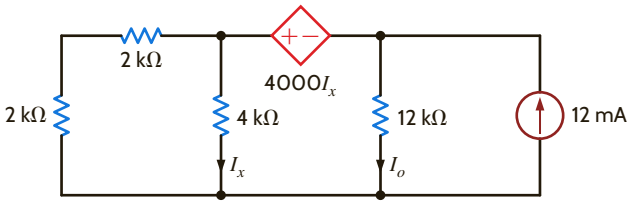

Figure P3.106

3.107 Find V_o in the circuit in Fig. P3.107 using loop analysis.

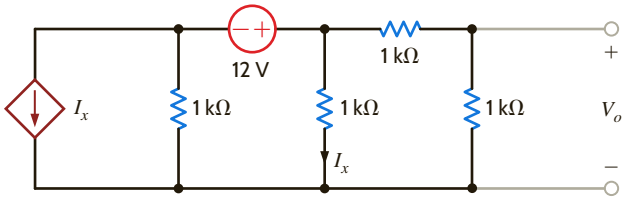

Figure P3.107

3.108. Use mesh analysis to find V_o in the circuit in Fig. P3.108.

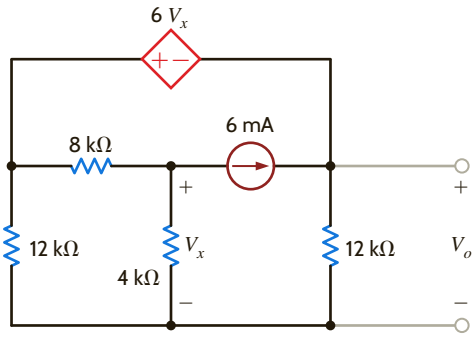

Figure P3.108

3.109 Using mesh analysis, find V_o in the circuit in Fig. P3.109.

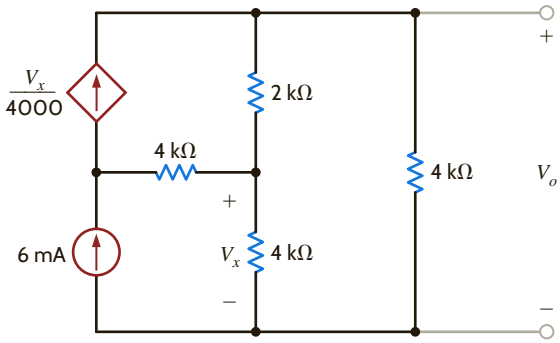

Figure P3.109

3.110 Find V_o in the circuit in Fig. P3.110 using nodal analysis.

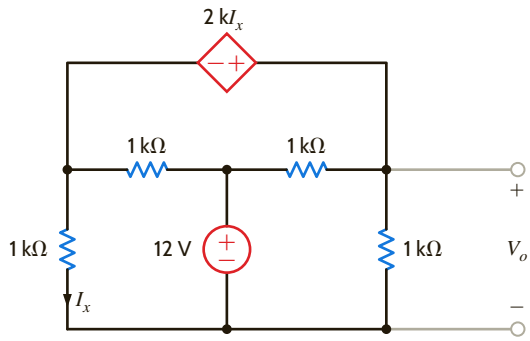

Figure P3.110

3.111 Find V_x in the circuit in Fig. P3.111.

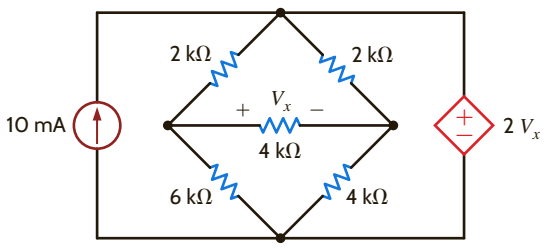

Figure P3.111

3.112 Find I_o in the circuit in Fig. P3.112.

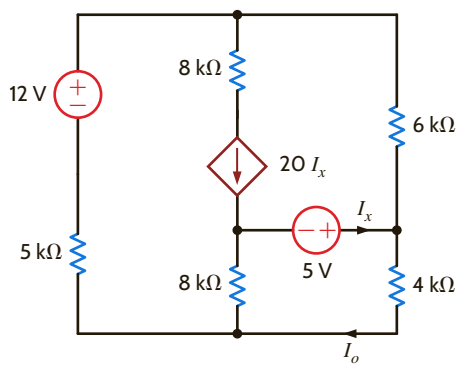

Figure P3.112

3.113 Write mesh equations for the circuit in Fig. P3.113 using the assigned currents.

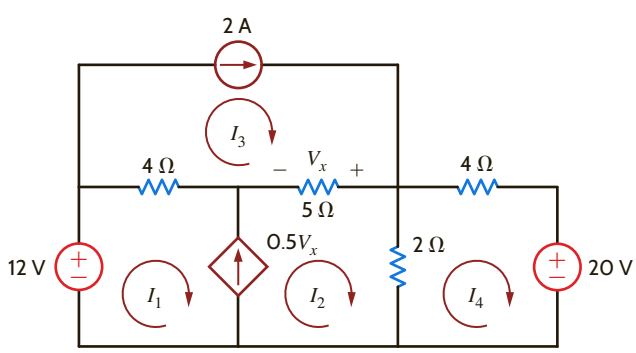

Figure P3.113

3.114 Find I_x in the circuit in Fig. P3.114 using loop analysis.

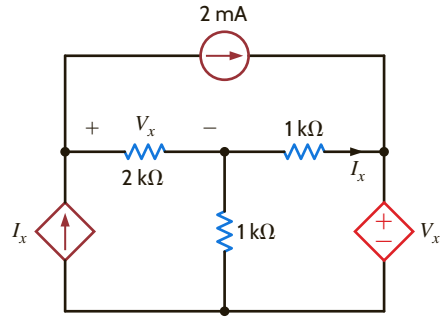

Figure P3.114

3.115 Solve for the mesh currents defined in the circuit in Fig. P3.115.

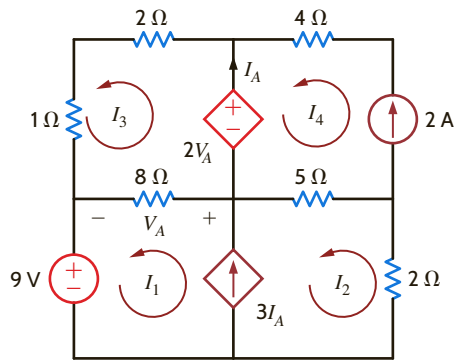

Figure P3.115

3.116 Solve for the assigned mesh currents in the network in Fig. P3.116.

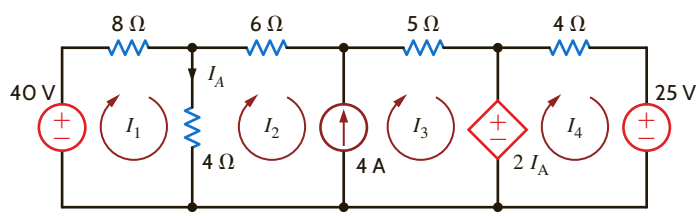

Figure P3.116

3.117 Using the assigned mesh currents shown in Fig. P3.117, solve for the power supplied by the dependent voltage source.

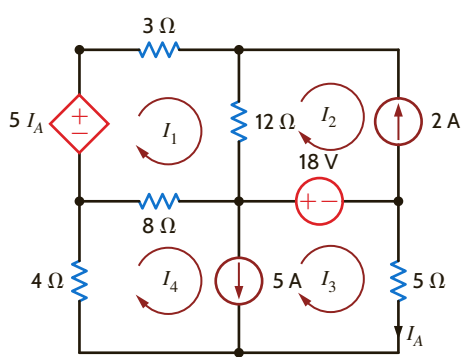

Figure P3.117

3.118 Find V_o in the network in Fig. P3.118.

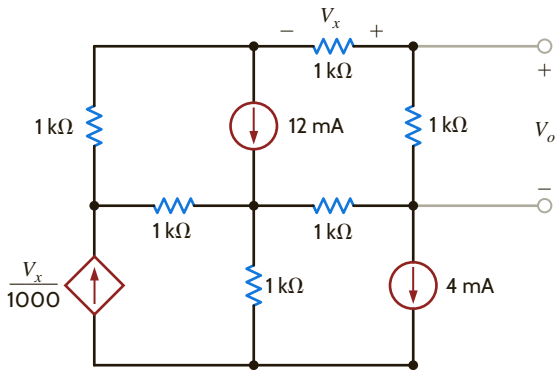

Figure P3.118

3.119 Using loop analysis, find V_o in the circuit in Fig. P3.119.

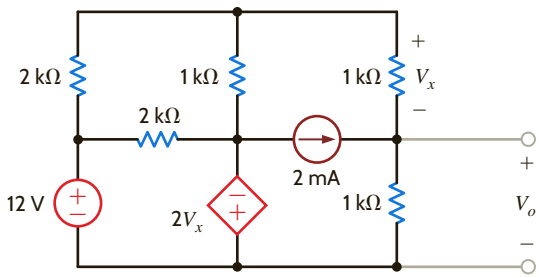

Figure P3.119

3.120 Using loop analysis, find V_o in the circuit in Fig. P3.120.

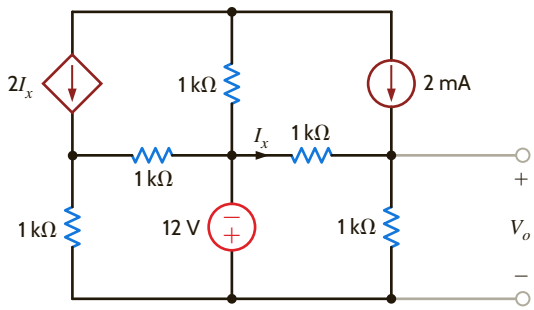

Figure P3.120

3.121 Using loop analysis, find V_o in the network in Fig. P3.121.

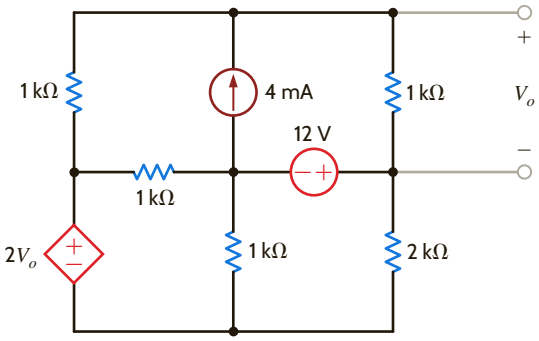

Figure P3.121

3.122 Using loop analysis, find V_o in the circuit in Fig. P3.122.

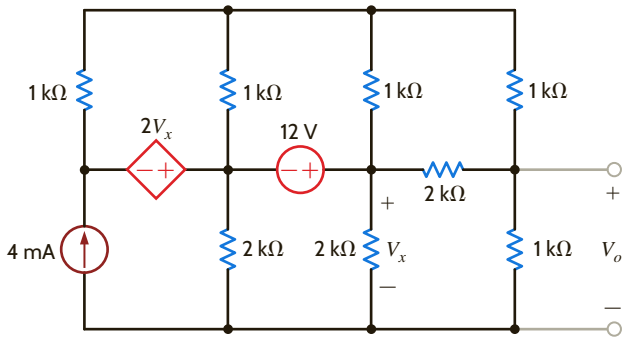

Figure P3.122

3.123 Using loop analysis, find I_o in the network in Fig. P3.123.

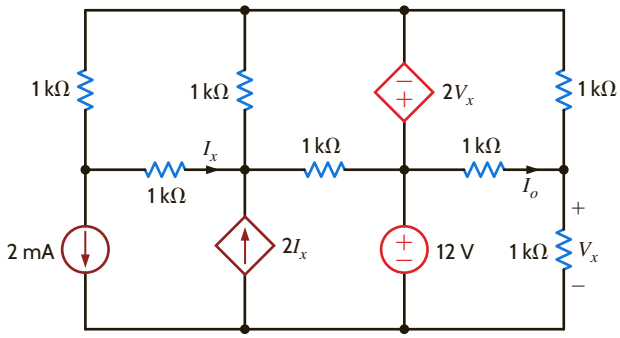

Figure P3.123

3.124 Use loop analysis to find I_o in the circuit in Fig. P3.124.

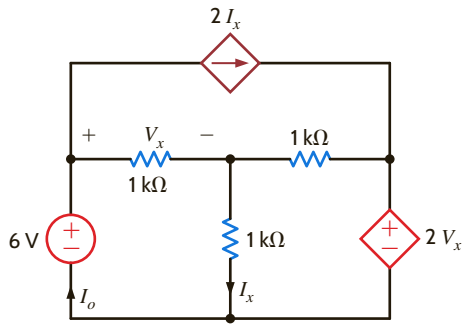

Figure P3.124

3.125 Find V_o in the circuit in Fig. P3.125 using loop analysis.

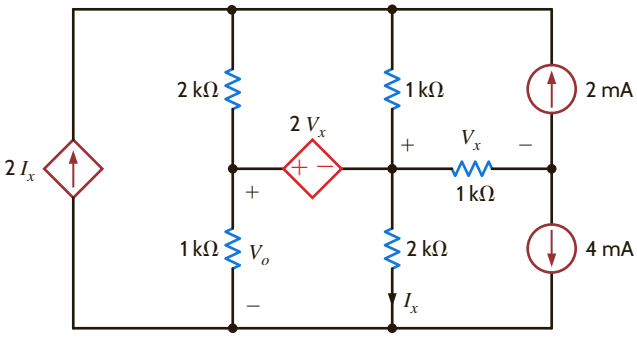

Figure P3.125

3.126 Using loop analysis, find I_o in the circuit in Fig. P3.126.

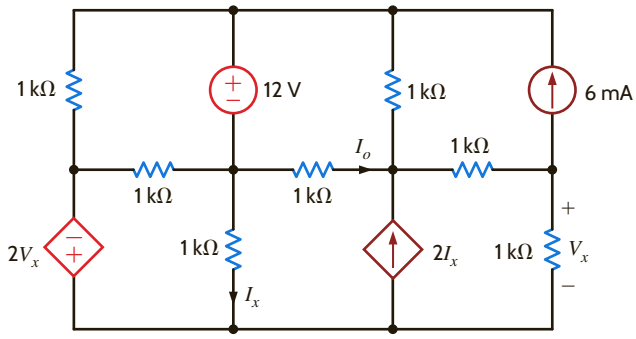

Figure P3.126

3.127 Use mesh analysis to determine the power delivered by the independent 3-V source in the network in Fig. P3.127.

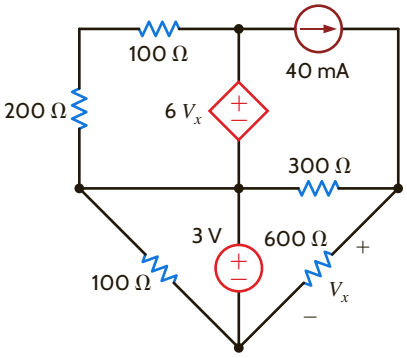

Figure P3.127

3.128 Use mesh analysis to find the power delivered by the current-controlled voltage source in the circuit in Fig. P3.128.

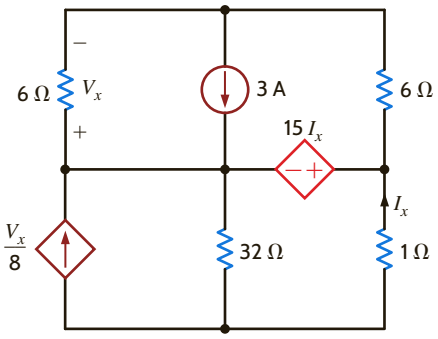

Figure P3.128

3.129 Use nodal analysis to find V_o in the circuit in Fig. P3.129.

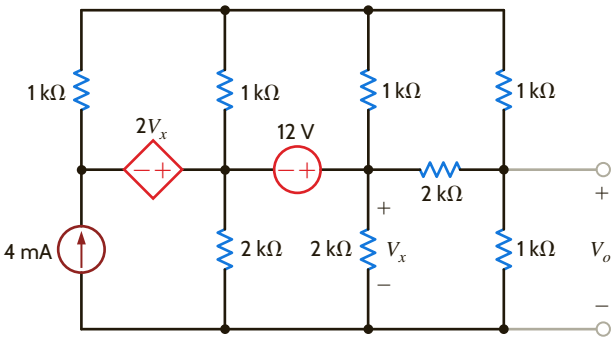

Figure P3.129

3.130 Find I_o in the network in Fig. P3.130 using nodal analysis.

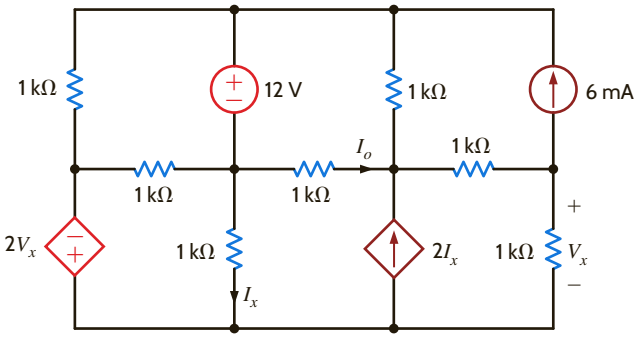

Figure P3.130

TYPICAL PROBLEMS FOUND ON THE FE EXAM

3FE-1 Find V_o in the circuit in Fig. 3PFE-1.

a. 3.33 V **c.** 9.33 V

b. 8.25 V **d.** 2.25 V

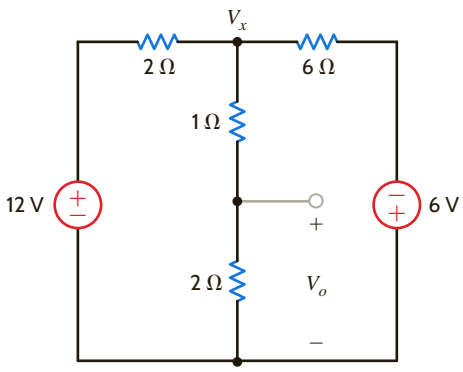

Figure 3PFE-1

3FE-2 Determine the power dissipated in the 6-ohm resistor in the network in Fig. 3PFE-2.

a. 8.2 W **c.** 4.4 W

b. 15.3 W **d.** 13.5 W

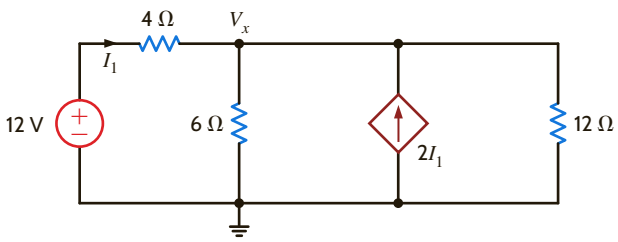

Figure 3PFE-2

3FE-3 Find the current I_x in the 4-ohm resistor in the circuit in Fig. 3PFE-3.

a. 20 A **c.** 7 A

b. 12 A **d.** 14 A

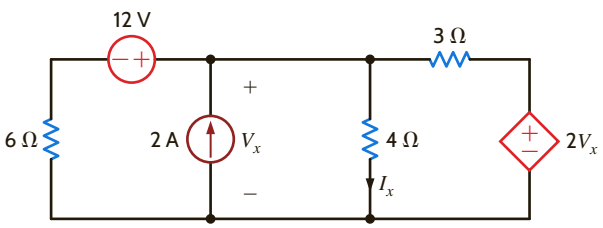

Figure 3PFE-3

3FE-4 Determine the voltage V_o in the circuit in Fig. 3PFE-4.

a. −3.28 V **c.** −6.43 V

b. 4.14 V **d.** 2.25 V

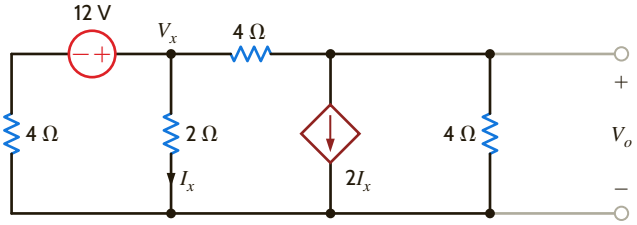

Figure 3PFE-4

3FE-5 What is the voltage V_1 in the circuit in Fig. 3PFE-5?

a. −7 V **c.** −2 V

b. 5 V **d.** 4 V

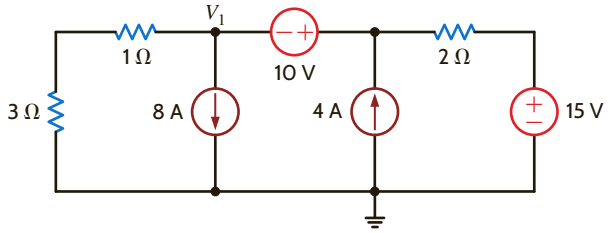

Figure 3PFE-5

ChapterFour

THE LEARNING GOALS FOR THIS CHAPTER ARE THAT STUDENTS SHOULD BE ABLE TO:

- Apply the model of the op-amp device to determine the currents and voltages in a circuit.
- Analyze a variety of circuits that employ op-amps.
- Use the model of the op-amp in a number of practical applications to determine the output voltage and/or current with respect to the input voltage(s) and current(s).

OPERATIONAL AMPLIFIERS

EXPERIMENTS THAT HELP STUDENTS DEVELOP AN UNDERSTANDING OF RESISTIVE CIRCUITS CONTAINING OPERATIONAL AMPLIFIERS ARE:

- An Inverting Amplifier Circuit: Confirm the input-to-output relationship of an inverting amplifier circuit with various gains and determine how the power supplies of a real operational amplifier limit the output voltage. Compare the measured voltages with analytical and simulated results, as well as the information provided in the operational amplifier's datasheet.
- A Noninverting Amplifier Circuit: Plot the voltage transfer characteristic of a noninverting amplifier circuit analytically, using a PSpice simulation, experimentally using the *x-y* display option on an oscilloscope, and finally using the experimental data in MATLAB.

BY APPLYING THEIR KNOWLEDGE OF OPERATIONAL AMPLIFIERS AND VOLTAGE DIVIDERS, STUDENTS CAN DESIGN:

- A simple DC voltmeter that uses an LED bar graph as an output indicator.
- A night light, which causes an LED to turn on after sensing the ambient light intensity using a photocell.
- A current source (voltage-to-current converter), where the impact of the output current and voltage of the operational amplifier on the performance of the voltage-controlled current source (VCCS) is explored.
- Logic probe that will indicate "logic low," "logic high," or intermediate and undetermined states.

4.1 Introduction

It can be argued that the operational amplifier, or op-amp as it is commonly known, is the single most important integrated circuit for analog circuit design. It is a versatile interconnection of transistors and resistors that vastly expands our capabilities in circuit design, from engine control systems to cellular phones. Early op-amps were built of vacuum tubes, making them bulky and power hungry. The invention of the transistor at Bell Labs in 1947 allowed engineers to create op-amps that were much smaller and more efficient. Still, the op-amp itself consisted of individual transistors and resistors interconnected on a printed circuit board (PCB). When the manufacturing process for integrated circuits (ICs) was developed around 1970, engineers could finally put all of the op-amp transistors and resistors onto a single IC chip. Today, it is common to find as many as four high-quality op-amps on a single IC for as little as $0.40. A sample of commercial op-amps is shown in **Fig. 4.1**.

Why are they called operational amplifiers? Originally, the op-amp was designed to perform mathematical operations such as addition, subtraction, differentiation, and integration. By adding simple networks to the op-amp, we can create these "building blocks" as well as voltage scaling, current-to-voltage conversion, and myriad more complex applications.

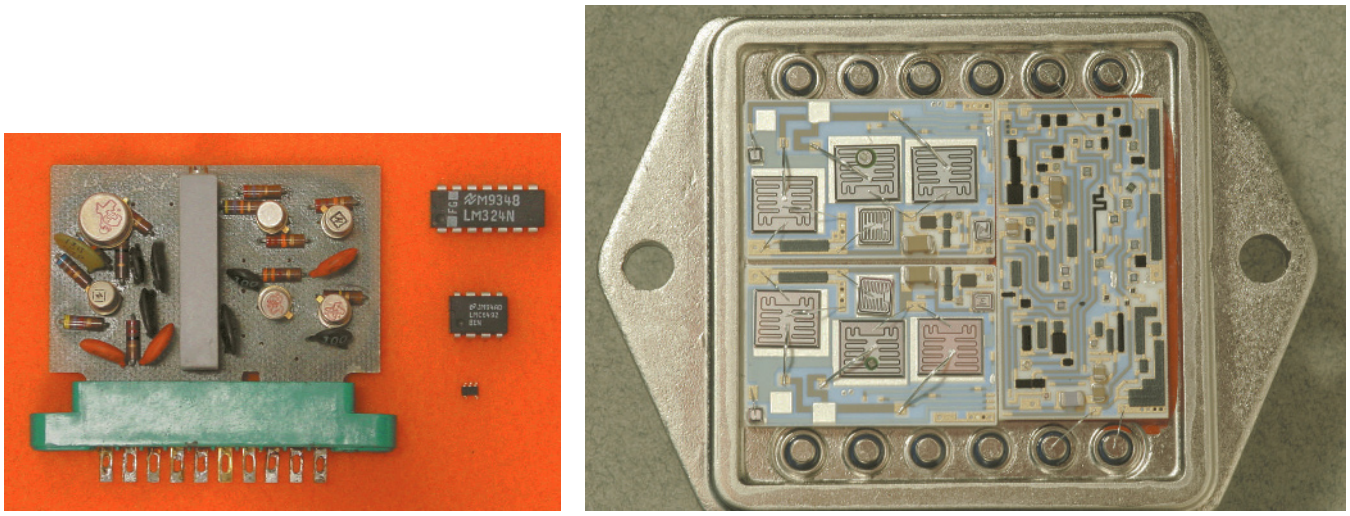

(a) (b)

Figure 4.1

A selection of op-amps. On the left (a) is a discrete op-amp assembled on a printed circuit board (PCB). On the right, top-down, a LM324 DIP, LMC6492 DIP, and MAX4240 in a SO-5 package (small outline/5 pins). The Apex Microtechnology PA03 with its lid removed (b) showing individual transistors and resistors. (*Left*, Courtesy of Mark Nelms and Jo Ann Loden; *right*, Courtesy of Apex Microtechnology Corp.)

4.2 Op-Amp Models

How can we, understanding only sources and resistors, hope to comprehend the performance of the op-amp? The answer lies in modeling. When the bells and whistles are removed, an op-amp is just a really good voltage amplifier. In other words, the output voltage is a scaled replica of the input voltage. Modern op-amps are such good amplifiers that it is easy to create an accurate, first-order model. As mentioned earlier, the op-amp is very popular and is used extensively in circuit design at all levels. We should not be surprised to find that op-amps are available for every application—low voltage, high voltage, micropower, high speed, high current, and so forth. Fortunately, the topology of our model is independent of these issues.

We start with the general-purpose LM324 quad (four in a pack) op-amp from National Semiconductor, shown in the upper right corner of **Fig. 4.1a**. The pinout for the LM324 is shown in **Fig. 4.2** for a DIP (Dual Inline Pack) style package with dimensions in inches. Recognizing there are four identical op-amps in the package, we will focus on amplifier 1. Pins 3 and 2 are the

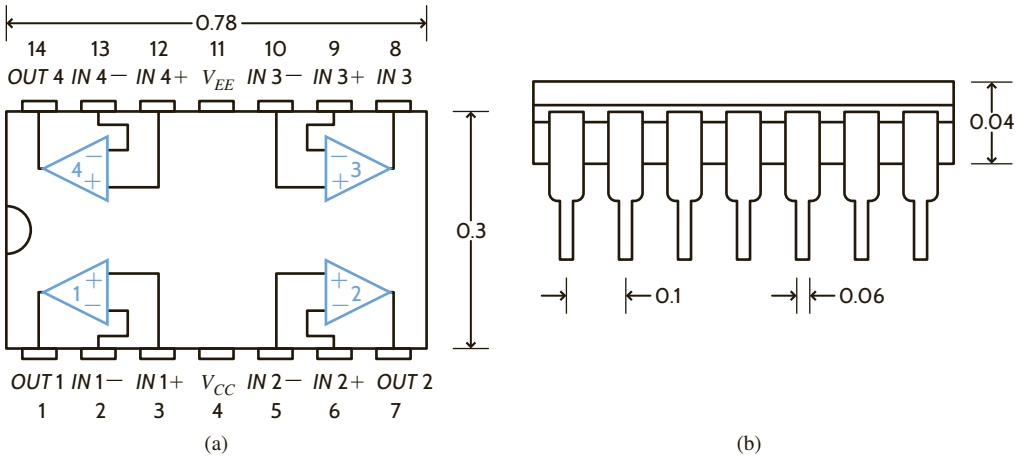

Figure 4.2

The pinout (a) and dimensional diagram (b) of the LM324 quad op-amp. Note the pin pitch (distance pin-to-pin) is 0.1 inches—standard for DIP packages.

input pins, *IN* 1+ and *IN* 1−, and are called the noninverting and inverting inputs, respectively. The output is at pin 1. A relationship exists between the output and input voltages,

$$V_o = A_o\,(IN_+ - IN_-) \qquad \textbf{4.1}$$

where all voltages are measured with respect to ground and A_o is the gain of the op-amp. (The location of the ground terminal will be discussed shortly.) From Eq. (4.1), we see that when IN_+ increases, so will V_o. However, if IN_- increases, then V_o will decrease—hence, the names noninverting and inverting inputs. We mentioned earlier that op-amps are very good voltage amplifiers. How good? Typical values for A_o are between 10,000 and 1,000,000!

Amplification requires power that is provided by the dc voltage sources connected to pins 4 and 11, called V_{CC} and V_{EE}, respectively. **Fig. 4.3** shows how the power supplies, or rails, are connected for both dual- and single-supply applications and defines the ground node to which all input and output voltages are referenced. Traditionally, V_{CC} is a positive dc voltage with respect to ground, and V_{EE} is either a negative voltage or ground itself. Actual values for these power supplies can vary widely depending on the application, from as little as one volt up to several hundred.

How can we model the op-amp? A dependent voltage source can produce V_o! What about the currents into and out of the op-amp terminals (pins 3, 2, and 1)? Fortunately for us, the currents are fairly proportional to the pin voltages. That sounds like Ohm's law. So, we model the *I-V* performance with two resistors, one at the input terminals (R_i) and another at the output (R_o). The circuit in **Fig. 4.4** brings everything together.

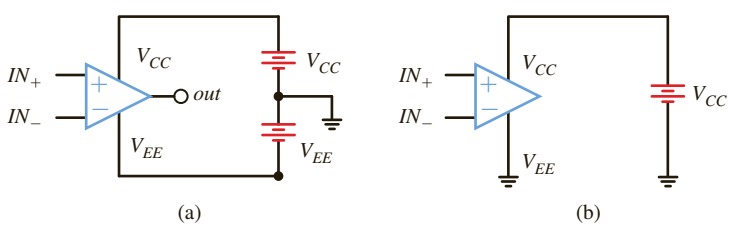

Figure 4.3

Schematics showing the power supply connections and ground location for (a) dual-supply and (b) single-supply implementations.

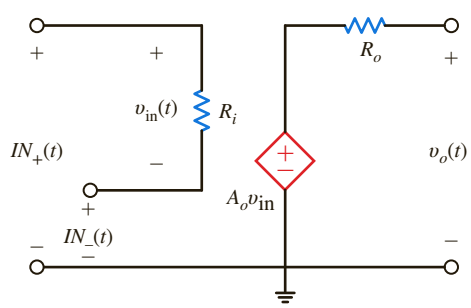

Figure 4.4

A simple model for the gain characteristics of an op-amp.

Figure 4.5

A network that depicts an op-amp circuit. V_S and R_{Th1} model the driving circuit, while the load is modeled by R_L. The circuit in Fig. 4.4 is the op-amp model.

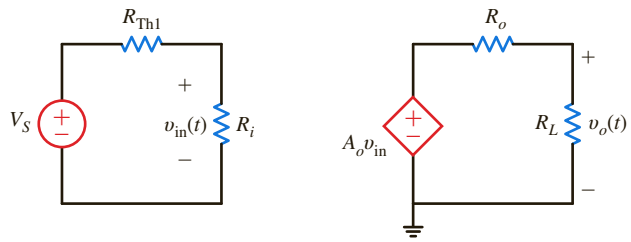

What values can we expect for A_o, R_i, and R_o? We can reason through this issue with the help of **Fig. 4.5** where we have drawn an equivalent for the circuitry that drives the input nodes and we have modeled the circuitry connected to the output with a single resistor, R_L. Since the op-amp is supposed to be a great voltage amplifier, let's write an equation for the overall gain of the circuit V_o/V_S. Using voltage division at the input and again at the output, we quickly produce the expression

$$\frac{V_o}{V_S} = \left[\frac{R_i}{R_i + R_{Th1}}\right] A_o \left[\frac{R_L}{R_o + R_L}\right]$$

To maximize the gain regardless of the values of R_{Th1} and R_L, we make the voltage division ratios as close to unity as possible. The ideal scenario requires that A_o be infinity, R_i be infinity, and R_o be zero, yielding a large overall gain of A_o. Table 4.1 shows the actual values of A_o, R_i, and R_o for a sampling of commercial op-amps intended for very different applications. While A_o, R_i, and R_o are not ideal, they do have the correct tendencies.

The power supplies affect performance in two ways. First, each op-amp has minimum and maximum supply ranges over which the op-amp is guaranteed to function. Second, for proper operation, the input and output voltages are limited to no more than the supply voltages.* If the inputs/output can reach within a few dozen millivolts of the supplies, then the inputs/output are called rail-to-rail. Otherwise, the inputs/output voltage limits are more severe—usually a volt or so away from the supply values. Combining the model in Fig. 4.4, the values in Table 4.1, and these I/O limitations, we can produce the graph in **Fig. 4.6** showing the output–input relation for each op-amp in Table 4.1. From the graph we see that LMC6492 and MAX4240 have rail-to-rail outputs, while the LM324 and PA03 do not.

Even though the op-amp can function within the minimum and maximum supply voltages, because of the circuit configuration, an increase in the input voltage may not yield a corresponding increase in the output voltage. In this case, the op-amp is said to be in saturation. The following example addresses this issue.

TABLE 4.1 A list of commercial op-amps and their model values

MANUFACTURER	PART NO.	A_O(V/V)	R_i(MΩ)	R_O (Ω)	COMMENTS
National	LM324	100,000	1.0	20	General purpose, up to ±16 V supplies, very inexpensive
National	LMC6492	50,000	10^7	150	Low-voltage, rail-to-rail inputs and outputs†
Maxim	MAX4240	20,000	45	160	Micro-power (1.8 V supply @ 10 μA), rail-to-rail inputs and outputs
Apex Microtechnology	PA03	125,000	10^5	2	High-voltage, ± 75 V and high-output current capability, 30 A. That's 2 kW!

†Rail-to-rail is a trademark of Motorola Corporation. This feature is discussed further in the following paragraphs.

*Op-amps are available that have input and/or output voltage ranges beyond the supply rails. However, these devices constitute a very small percentage of the op-amp market and will not be discussed here.

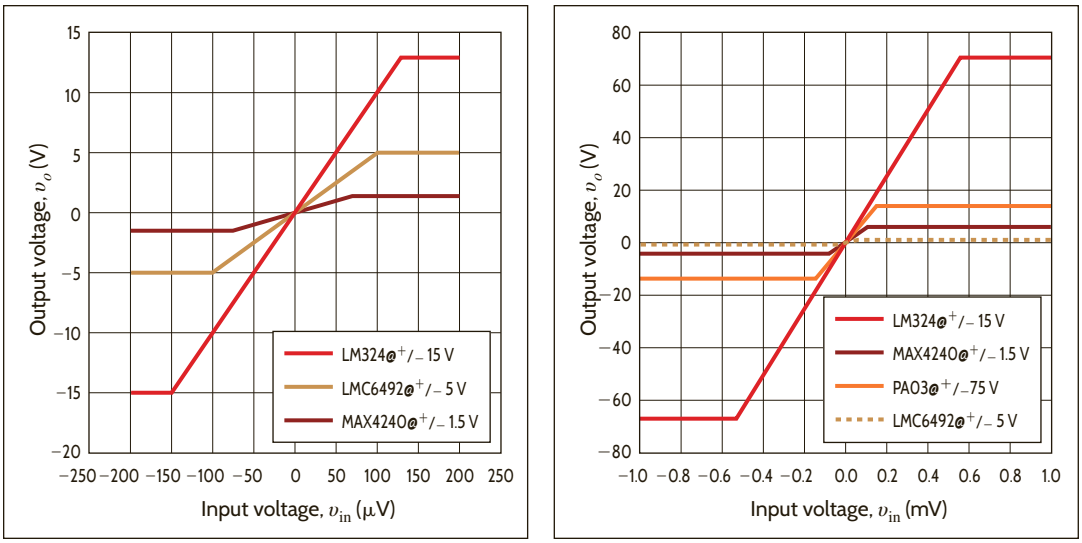

Figure 4.6

Transfer plots for the op-amps listed in Table 4.1. The supply voltages are listed in the plot legends. Note that the LMC6492 and MAX4240 have rail-to-rail output voltages (output voltage range extends to power supply values), while the LM324 and PA03 do not.

EXAMPLE 4.1

The input and output signals for an op-amp circuit are shown in **Fig. 4.7**. We wish to determine (a) if the op-amp circuit is linear and (b) the circuit's gain.

SOLUTION

a. We know that if the circuit is linear, the output must be linearly related, that is, proportional, to the input. An examination of the input and output waveforms in Fig. 4.7 clearly indicates that in the region $t = 1.25$ to 2.5 and 4 to 6 ms the output is constant while the input is changing. In this case, the op-amp circuit is in saturation and therefore not linear.

b. In the region where the output is proportional to the input, that is, $t = 0$ to 1 ms, the input changes by 1 V and the output changes by 3.3 V. Therefore, the circuit's gain is 3.3.

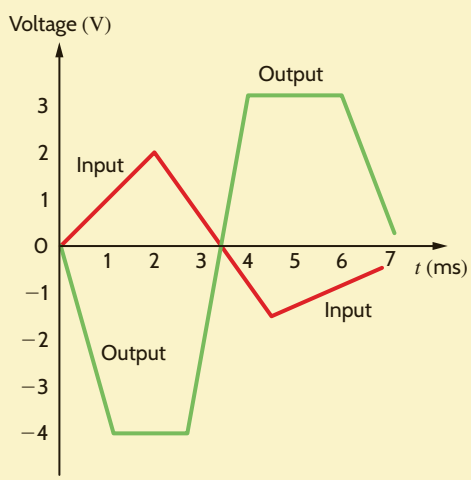

Figure 4.7

An op-amp input–output characteristic.

To introduce the performance of the op-amp in a practical circuit, consider the network in **Fig. 4.8a** called a unity gain buffer. Notice that the op-amp schematic symbol includes the power supplies. Substituting the model in Fig. 4.4 yields the circuit in **Fig. 4.8b**, containing just resistors and sources, which we can easily analyze. Writing loop equations, we have

$$V_S = IR_i + IR_o + A_oV_{in}$$
$$V_{out} = IR_o + A_oV_{in}$$
$$V_{in} = IR_i$$

Figure 4.8

Circuit (a) and model (b) for the unity gain buffer.

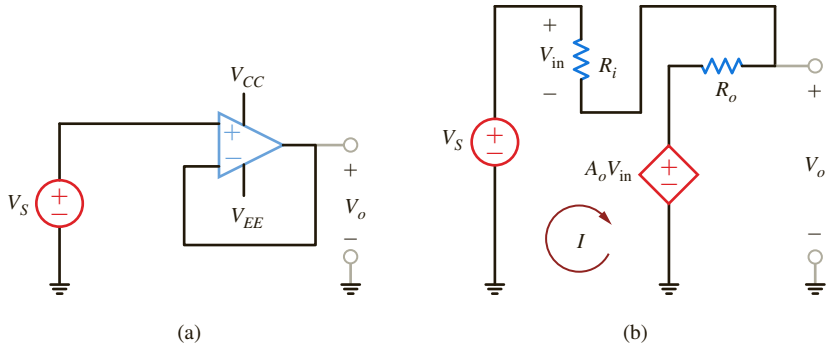

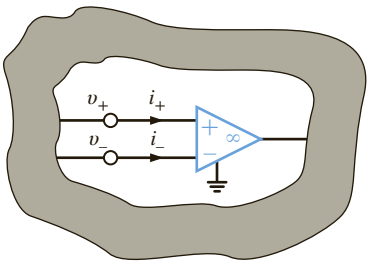

Figure 4.9

Ideal model for an operational amplifier. Model parameters: $i_+ = i_- = 0$, $v_+ = v_-$.

Solving for the gain, V_o/V_S, we find

$$\frac{V_o}{V_S} = \frac{1}{1 + \dfrac{R_i}{R_o + A_o R_i}}$$

For $R_o << R_i$, we have

$$\frac{V_o}{V_S} \approx \frac{1}{1 + \dfrac{1}{A_o}}$$

And, if A_o is indeed $>>1$,

$$\frac{V_o}{V_S} \approx 1$$

The origin of the name *unity gain buffer* should be apparent. Table 4.2 shows the actual gain values for $V_S = 1$ V using the op-amps listed in Table 4.1. Notice how close the gain is to unity and how small the input voltage and current are. These results lead us to simplify the op-amp in Fig. 4.4 significantly. We introduce the *ideal op-amp model*, where A_o and R_i are infinite and R_o is zero. This produces two important results for analyzing op-amp circuitry, listed in Table 4.3.

From Table 4.3 we find that the ideal model for the op-amp is reduced to that shown in **Fig. 4.9**. The important characteristics of the model are as follows: (1) since R_i is extremely large, the input currents to the op-amp are approximately zero (i.e., $i_+ \approx i_- \approx 0$); and (2) if the output voltage is to remain bounded, then as the gain becomes very large and approaches infinity, the voltage across the input terminals must simultaneously become infinitesimally small so that as $A_o \to \infty$, $v_+ - v_- \to 0$ (i.e., $v_+ - v_- = 0$ or $v_+ = v$). The difference between these input voltages is often called the *error signal* for the op-amp (i.e., $v_+ - v_- = v_e$).

The ground terminal ⏚ shown on the op-amp is necessary for signal current return, and it guarantees that Kirchhoff's current law is satisfied at both the op-amp and the ground node in the circuit.

In summary, then, our ideal model for the op-amp is simply stated by the following conditions:

$$i_+ = i_- = 0 \qquad v_+ = v_- \tag{4.2}$$

TABLE 4.2 Unity gain buffer performance for the op-amps listed in Table 4.1

OP-AMP	BUFFER GAIN	V_{in} (mV)	I (pA)
LM324	0.999990	9.9999	9.9998
LMC6492	0.999980	19.999	1.9999×10^{-6}
MAX4240	0.999950	49.998	1.1111
PA03	0.999992	7.9999	7.9999×10^{-5}

TABLE 4.3 Consequences of the ideal op-amp model on input terminal I/V values

MODEL ASSUMPTION	TERMINAL RESULT
$A_o \to \infty$	input voltage → 0 V
$R_i \to \infty$	input current → 0 A

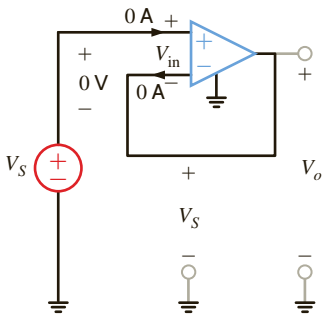

Figure 4.10

An ideal op-amp configured as a unity gain buffer.

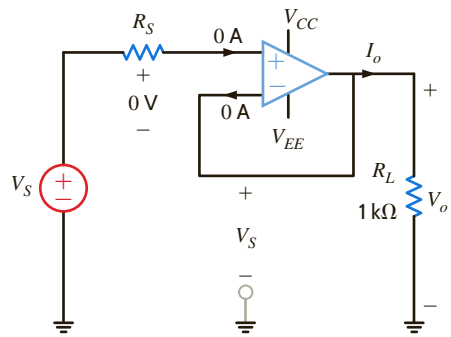

Figure 4.11

A unity gain buffer with a load resistor.

These simple conditions are extremely important because they form the basis of our analysis of op-amp circuits.

Let's use the ideal model to reexamine the unity gain buffer, drawn again in **Fig. 4.10**, where the input voltage and currents are shown as zero. Given that V_{in} is zero, the voltage at both op-amp inputs is V_S. Since the inverting input is physically connected to the output, V_o is also V_S—unity gain!

Armed with the ideal op-amp model, let's change the circuit in Fig. 4.10 slightly as shown in **Fig. 4.11** where V_S and R_S are an equivalent for the circuit driving the buffer and R_L models the circuitry connected to the output. There are three main points here. First, the gain is still unity. Second, the op-amp requires no current from the driving circuit. Third, the output current ($I_o = V_o/R_L$) comes from the power supplies, through the op-amp and out of the output pin. In other words, the load current comes from the power supplies, which have plenty of current output capacity, rather than the driving circuit, which may have very little. This isolation of current is called *buffering*.

An obvious question at this point is this: if $V_o = V_S$, why not just connect V_S to V_o via two parallel connection wires; why do we need to place an op-amp between them? The answer to this question is fundamental and provides us with some insight that will aid us in circuit analysis and design.

Consider the circuit shown in **Fig. 4.12a**. In this case V_o is not equal to V_S because of the voltage drop across R_S:

$$V_o = V_S - IR_S$$

However, in **Fig. 4.12b**, the input current to the op-amp is zero and, therefore, V_S appears at the op-amp input. Since the gain of the op-amp configuration is 1, $V_o = V_S$. In Fig. 4.12a the resistive network's interaction with the source caused the voltage V_o to be less than V_S. In other words, the resistive network loads the source voltage. However, in Fig. 4.12b the op-amp isolates the source from the resistive network; therefore, the voltage follower is referred to as a *buffer amplifier* because it can be used to isolate one circuit from another. The energy supplied to the resistive network in the first case must come from the source V_S, whereas in the second case it comes from the power supplies that supply the amplifier, and little or no energy is drawn from V_S.

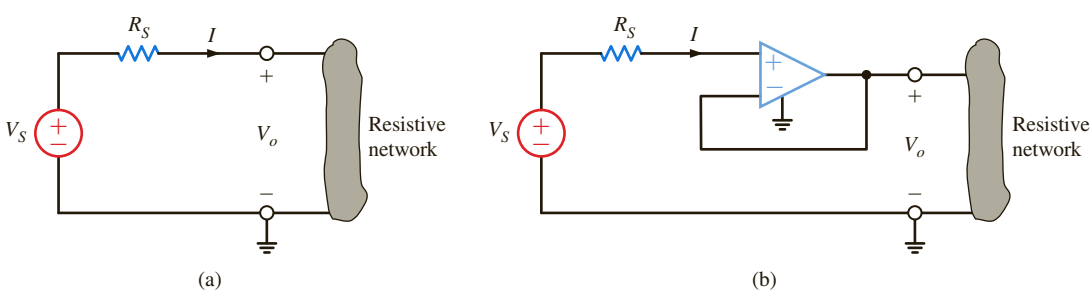

Figure 4.12

Illustration of the isolation capability of a voltage follower.

4.3 Fundamental Op-Amp Circuits

As a general rule, when analyzing op-amp circuits we write nodal equations at the op-amp input terminals, using the ideal op-amp model conditions. Thus, the technique is straightforward and simple to implement.

EXAMPLE 4.2

Let us determine the gain of the basic inverting op-amp configuration shown in **Fig. 4.13a** using both the nonideal and ideal op-amp models.

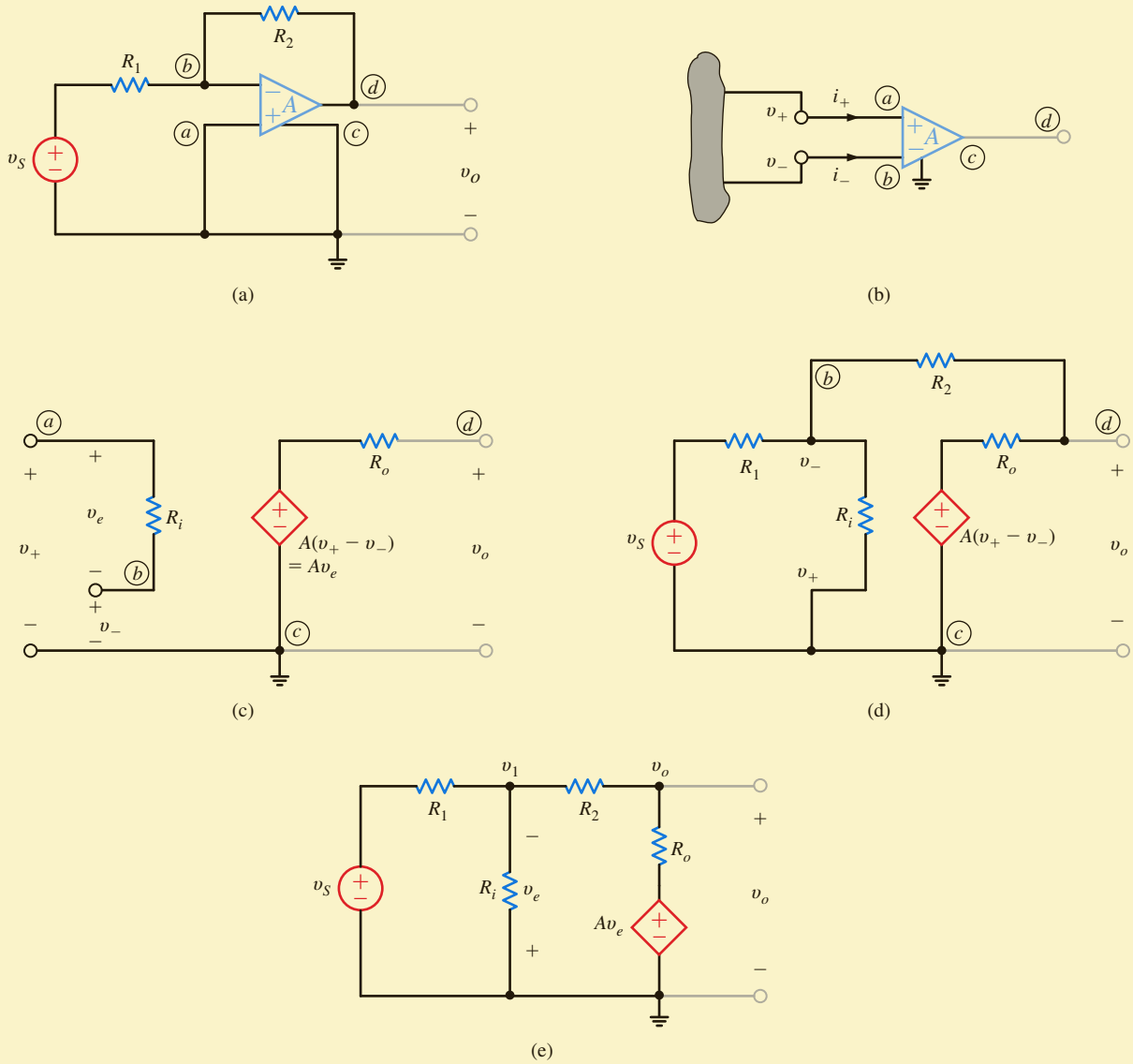

Figure 4.13
Op-amp circuit.

SOLUTION Our model for the op-amp is shown generically in **Fig. 4.13b** and specifically in terms of the parameters R_i, A, and R_o in **Fig. 4.13c**. If the model is inserted in the network in Fig. 4.13a, we obtain the circuit shown in **Fig. 4.13d**, which can be redrawn as shown in **Fig. 4.13e**.

The node equations for the network are

$$\frac{v_1 - v_S}{R_1} + \frac{v_1}{R_i} + \frac{v_1 - v_o}{R_2} = 0$$
$$\frac{v_o - v_1}{R_2} + \frac{v_o - Av_e}{R_o} = 0$$

where $v_e = -v_1$. The equations can be written in matrix form as

$$\begin{bmatrix} \frac{1}{R_1} + \frac{1}{R_i} + \frac{1}{R_2} & -\left(\frac{1}{R_2}\right) \\ -\left(\frac{1}{R_2} - \frac{A}{R_o}\right) & \frac{1}{R_2} + \frac{1}{R_o} \end{bmatrix} \begin{bmatrix} v_1 \\ v_o \end{bmatrix} = \begin{bmatrix} \frac{v_s}{R_1} \\ 0 \end{bmatrix}$$

Solving for the node voltages, we obtain

$$\begin{bmatrix} v_1 \\ v_o \end{bmatrix} = \frac{1}{\Delta} \begin{bmatrix} \frac{1}{R_2} + \frac{1}{R_o} & \frac{1}{R_2} \\ \frac{1}{R_2} - \frac{A}{R_o} & \frac{1}{R_1} + \frac{1}{R_i} + \frac{1}{R_o} \end{bmatrix} \begin{bmatrix} \frac{v_s}{R_1} \\ 0 \end{bmatrix}$$

where

$$\Delta = \left(\frac{1}{R_1} + \frac{1}{R_i} + \frac{1}{R_2}\right)\left(\frac{1}{R_2} + \frac{1}{R_o}\right) - \left(\frac{1}{R_2}\right)\left(\frac{1}{R_2} - \frac{A}{R_o}\right)$$

Hence,

$$v_o = \frac{\left(\frac{1}{R_2} - \frac{A}{R_o}\right)\left(\frac{v_s}{R_1}\right)}{\left(\frac{1}{R_1} + \frac{1}{R_i} + \frac{1}{R_2}\right)\left(\frac{1}{R_2} + \frac{1}{R_o}\right) - \left(\frac{1}{R_2}\right)\left(\frac{1}{R_2} - \frac{A}{R_o}\right)}$$

which can be written as

$$\frac{v_o}{v_s} = \frac{-(R_2/R_1)}{1 - \left[\left(\frac{1}{R_1} + \frac{1}{R_i} + \frac{1}{R_2}\right)\left(\frac{1}{R_2} + \frac{1}{R_o}\right) \Big/ \left(\frac{1}{R_2}\right)\left(\frac{1}{R_2} - \frac{A}{R_o}\right)\right]}$$

If we now employ typical values for the circuit parameters (e.g., $A = 10^5$, $R_i = 10^8\ \Omega$, $R_o = 10\ \Omega$, $R_1 = 1\ \text{k}\Omega$, and $R_2 = 5\ \text{k}\Omega$), the voltage gain of the network is

$$\frac{v_o}{v_s} = -4.9996994 \approx -5.000$$

However, the ideal op-amp has infinite gain. Therefore, if we take the limit of the gain equation as $A \to \infty$, we obtain

$$\lim_{A \to \infty} \left(\frac{v_o}{v_S}\right) = -\frac{R_2}{R_1} = -5.000$$

Note that the ideal op-amp yielded a result accurate to within four significant digits of that obtained from an exact solution of a typical op-amp model. These results are easily repeated for the vast array of useful op-amp circuits.

We now analyze the network in Fig. 4.13a using the ideal op-amp model. In this model,

$$i_+ = i_- = 0$$
$$v_+ = v_-$$

As shown in Fig. 4.13a, $v_+ = 0$ and, therefore, $v_- = 0$. If we now write a node equation at the negative terminal of the op-amp, we obtain

$$\frac{v_S - 0}{R_1} + \frac{v_o - 0}{R_2} = 0$$

or

$$\frac{v_o}{v_s} = -\frac{R_2}{R_1}$$

and we have immediately obtained the results derived previously.

Notice that the gain is a simple resistor ratio. This fact makes the amplifier very versatile in that we can control the gain accurately and alter its value by changing only one resistor. Also, the gain is essentially independent of op-amp parameters. Since the precise values of A_o, R_i, and R_o are sensitive to such factors as temperature, radiation, and age, their elimination results in a gain that is stable regardless of the immediate environment. Since it is much easier to employ the ideal op-amp model rather than the nonideal model, unless otherwise stated we will use the ideal op-amp assumptions to analyze circuits that contain operational amplifiers.

PROBLEM-SOLVING STRATEGY

OP-AMP CIRCUITS

STEP 1. Use the ideal op-amp model: $A_o = \infty$, $R_i = \infty$, $R_o = 0$.

- $i_+ = i_- = 0$
- $v_+ = v_-$

STEP 2. Apply nodal analysis to the resulting circuit.

STEP 3. Solve nodal equations to express the output voltage in terms of the op-amp input signals.

EXAMPLE 4.3

Let us now determine the gain of the basic noninverting op-amp configuration shown in Fig. 4.14.

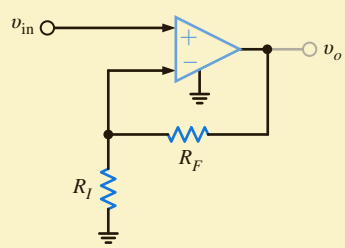

Figure 4.14
The noninverting op-amp configuration.

SOLUTION

Once again, we employ the ideal op-amp model conditions; that is, $v_- = v_+$ and $i_- = i_+$. Using the fact that $i_- = 0$ and $v_- = v_{in}$, the KCL equation at the negative terminal of the op-amp is

$$\frac{v_{in}}{R_I} = \frac{v_o - v_{in}}{R_F}$$

or

$$v_{in}\left(\frac{1}{R_I} + \frac{1}{R_F}\right) = \frac{v_o}{R_F}$$

Thus,

$$\frac{v_o}{v_{in}} = 1 + \frac{R_F}{R_I}$$

Note the similarity of this case to the inverting op-amp configuration in the previous example. We find that the gain in this configuration is also controlled by a simple resistor ratio but is not inverted; that is, the gain ratio is positive.

The remaining examples, though slightly more complicated, are analyzed in exactly the same manner as those already outlined.

EXAMPLE 4.4

Gain error in an amplifier is defined as

$$GE = \left[\frac{\text{actual gain} - \text{ideal gain}}{\text{ideal gain}}\right] \times 100\%$$

We wish to show that for a standard noninverting configuration with finite gain A_o, the gain error is

$$GE = \frac{-100\%}{1 + A_o\beta}$$

where $\beta = R_1/(R_1 + R_2)$.

SOLUTION

The standard noninverting configuration and its equivalent circuit are shown in Figs. 4.15a and b, respectively. The circuit equations for the network in Fig. 4.15b are

$$v_S = v_{in} + v_1, \qquad v_{in} = \frac{v_o}{A_o}, \qquad \text{and} \qquad v_1 = \frac{R_1}{R_1 + R_2} v_o = \beta v_o$$

The expression that relates the input and output is

$$v_S = v_o\left[\frac{1}{A_o} + \beta\right] = v_o\left[\frac{1 + A_o\beta}{A_o}\right]$$

and thus the actual gain is

$$\frac{v_o}{v_S} = \frac{A_o}{1 + A_o\beta}$$

Recall that the ideal gain for this circuit is $(R_1 + R_2)/R_1 = 1/\beta$. Therefore, the gain error is

$$GE = \left[\frac{\dfrac{A_o}{1 + A_o\beta} - \dfrac{1}{\beta}}{1/\beta}\right]100\%$$

which, when simplified, yields

$$GE = \frac{-100\%}{1 + A_o\beta}$$

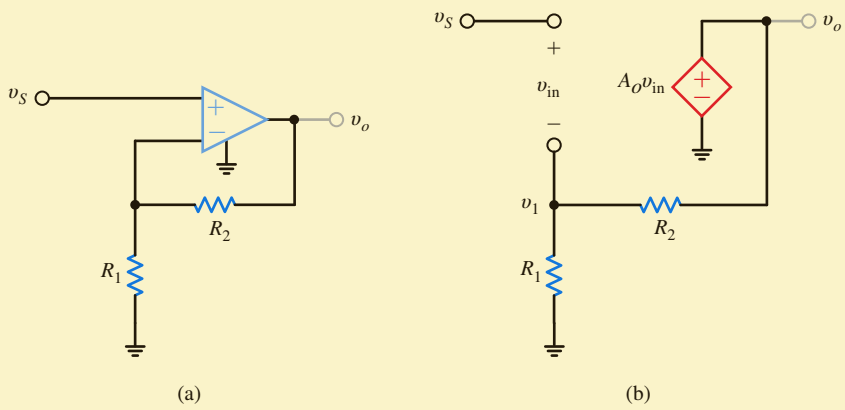

Figure 4.15
Circuits used in Example 4.4.

EXAMPLE 4.5

Consider the op-amp circuit shown in Fig. 4.16. Let us determine an expression for the output voltage.

Figure 4.16
Differential amplifier operational amplifier circuit.

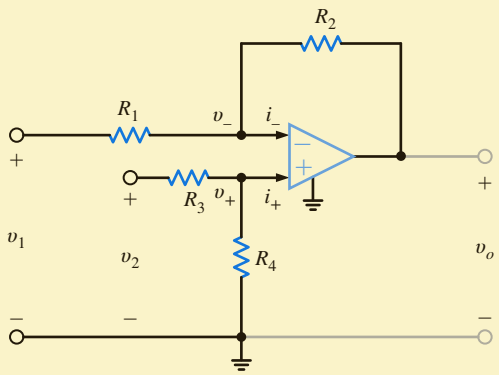

SOLUTION

The node equation at the inverting terminal is

$$\frac{v_1 - v_-}{R_1} + \frac{v_o - v_-}{R_2} = i_-$$

At the noninverting terminal, KCL yields

$$\frac{v_2 - v_+}{R_3} = \frac{v_+}{R_4} + i_+$$

However, $i_+ = i_- = 0$ and $v_+ = v_-$. Substituting these values into the two preceding equations yields

$$\frac{v_1 - v_-}{R_1} + \frac{v_o - v_-}{R_2} = 0$$

and

$$\frac{v_2 - v_-}{R_3} = \frac{v_-}{R_4}$$

Solving these two equations for v_o results in the expression

$$v_o = \frac{R_2}{R_1}\left(1 + \frac{R_1}{R_2}\right)\frac{R_4}{R_3 + R_4}v_2 - \frac{R_2}{R_1}v_1$$

Note that if $R_4 = R_2$ and $R_3 = R_1$, the expression reduces to

$$v_o = \frac{R_2}{R_1}(v_2 - v_1)$$

Therefore, this op-amp can be employed to subtract two input voltages.

EXAMPLE 4.6

The circuit shown in Fig. 4.17a is a precision differential voltage-gain device. It is used to provide a single-ended input for an analog-to-digital converter. We wish to derive an expression for the output of the circuit in terms of the two inputs.

SOLUTION

To accomplish this, we draw the equivalent circuit shown in Fig. 4.17b. Recall that the voltage across the input terminals of the op-amp is approximately zero and the currents into the op-amp input terminals are approximately zero. Note that we can write node equations for node voltages v_1 and v_2 in terms of v_o and v_a. Since we are interested in an expression for v_o

in terms of the voltages v_1 and v_2, we simply eliminate the v_a terms from the two node equations. The node equations are

$$\frac{v_1 - v_o}{R_2} + \frac{v_1 - v_a}{R_1} + \frac{v_1 - v_2}{R_G} = 0$$

$$\frac{v_2 - v_a}{R_1} + \frac{v_2 - v_1}{R_G} + \frac{v_2}{R_2} = 0$$

Combining the two equations to eliminate v_a, and then writing v_o in terms of v_1 and v_2, yields

$$v_o = (v_1 - v_2)\left(1 + \frac{R_2}{R_1} + \frac{2R_2}{R_G}\right)$$

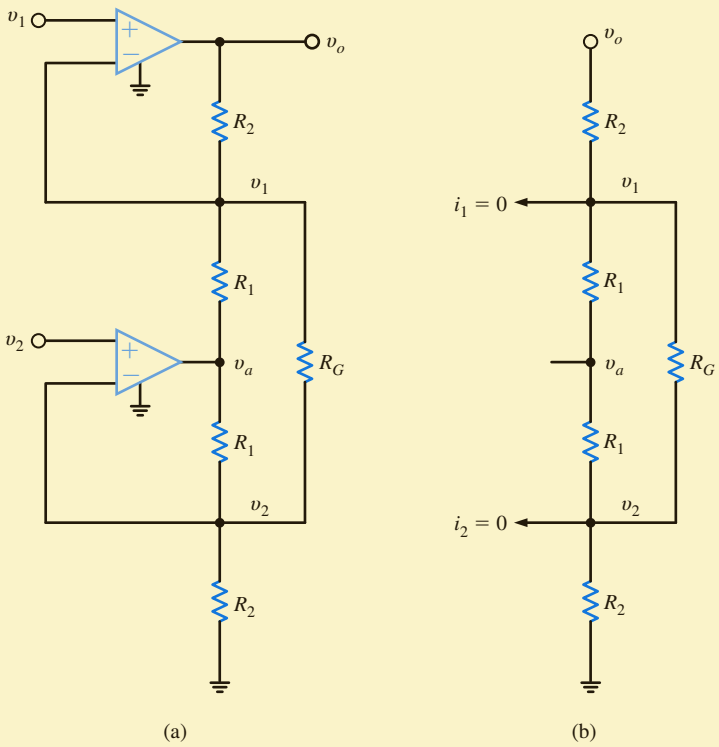

Figure 4.17
Instrumentation amplifier circuit.

LEARNING ASSESSMENTS

E4.1 Find I_o in the network in Fig. E4.1.

ANSWER:
$I_o = 8.4$ mA.

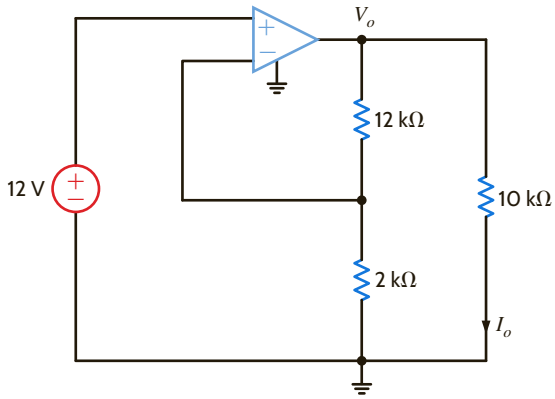

Figure E4.1

E4.2 Determine the gain of the op-amp circuit in Fig. E4.2.

ANSWER:
$\frac{V_o}{V_S} = 1 + \frac{R_2}{R_1}$.

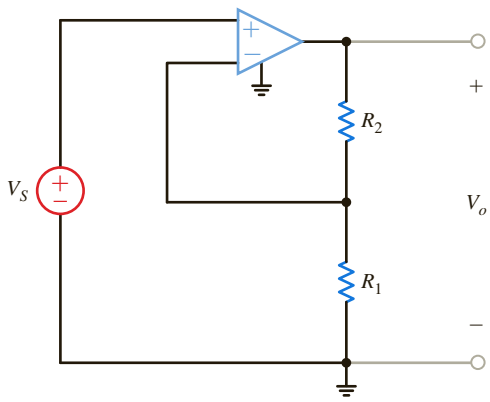

Figure E4.2

E4.3 Determine both the gain and the output voltage of the op-amp configuration shown in Fig. E4.3.

ANSWER:
$V_o = 0.101$ V;
gain = 101.

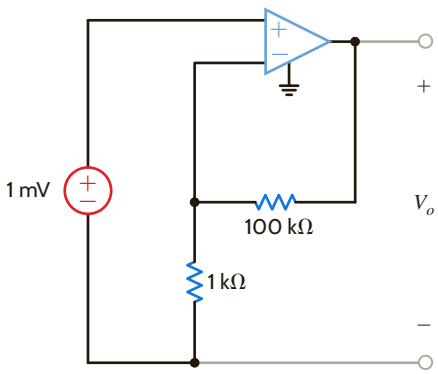

Figure E4.3

E4.4 Find I_1, I_2, I_3, and I_4 in Fig. E4.4.

ANSWER:
$I_1 = 0$, $I_2 = 1.25$ mA,
$I_3 = -0.5$ mA, and $I_4 = 0.75$ mA.

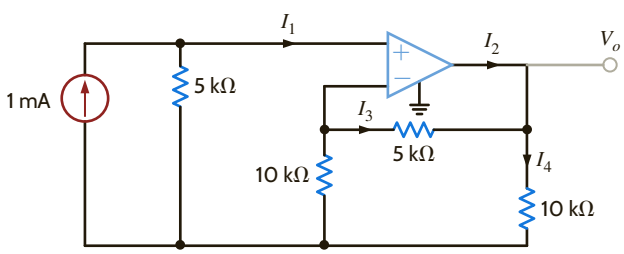

Figure E4.4

E4.5 Find V_o in terms of V_1 and V_2 in Fig. E4.5. If $V_1 = V_2 = 4$ V, find V_o. If the op-amp power supplies are ± 15 V and $V_2 = 2$ V, what is the allowable range of V_1?

ANSWER:
$V_o = -2\,V_1 + 3.5\,V_2$;
6 V; $-4\text{ V} \le V_1 \le 11$ V.

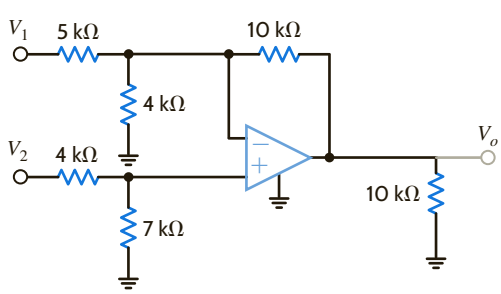

Figure E4.5

E4.6 Find V_o and V_3 in Fig. E4.6.

ANSWER:
$V_o = -9$ V;
$V_3 = -4.8$ V.

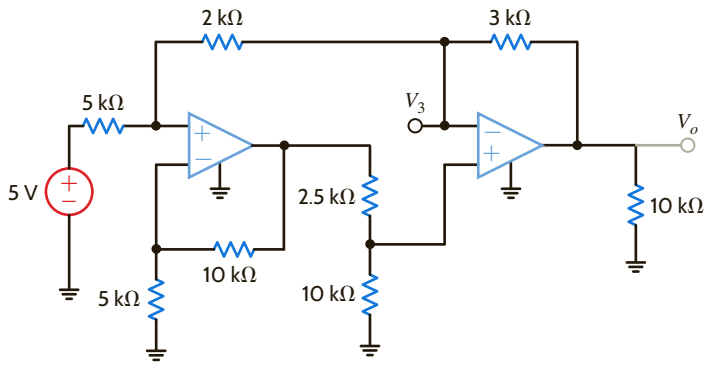

Figure E4.6

E4.7 Find V_o in Fig. E4.7.

ANSWER:

$$V_o = \left[\left(\frac{R_3}{R_2} + \frac{R_3}{R_4} + 1\right)\left(1 + \frac{R_2}{R_1}\right) - \frac{R_3}{R_2}\right]V_1$$

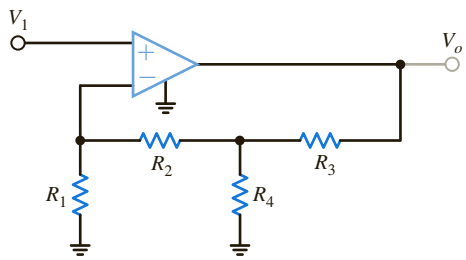

Figure E4.7

EXAMPLE 4.7

The circuit in Fig. 4.18 is an electronic ammeter. It operates as follows: the unknown current, I, through R_I produces a voltage, V_I. V_I is amplified by the op-amp to produce a voltage, V_o, which is proportional to I. The output voltage is measured with a simple voltmeter. We want to find the value of R_2 such that 10 V appears at V_o for each milliamp of unknown current.

SOLUTION

Since the current into the op-amp + terminal is zero, the relationship between V_I and I is

$$V_I = IR_I$$

The relationship between the input and output voltages is

$$V_o = V_I\left(1 + \frac{R_2}{R_1}\right)$$

or, solving the equation for V_o/I, we obtain

$$\frac{V_o}{I} = R_I\left(1 + \frac{R_2}{R_1}\right)$$

Using the required ratio V_o/I of 10^4 and resistor values from Fig. 4.18, we can find that

$$R_2 = 9\ \text{k}\Omega$$

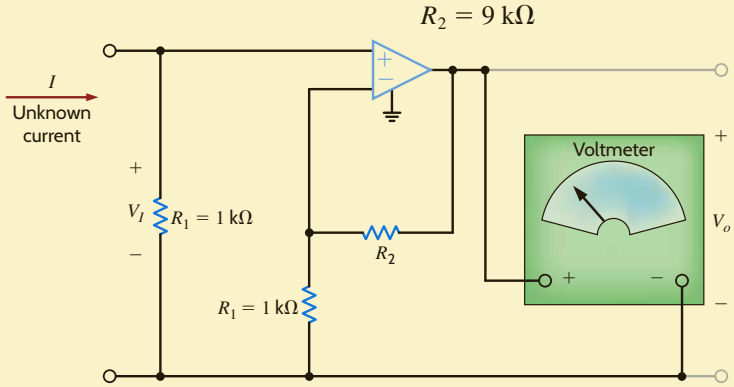

Figure 4.18
Electronic ammeter.

EXAMPLE 4.8

The two op-amp circuits shown in **Fig. 4.19** produce an output given by the equation

$$V_o = 8\,V_1 - 4\,V_2$$

where

$$1\text{ V} \le V_1 \le 2\text{ V} \qquad \text{and} \qquad 2\text{ V} \le V_2 \le 3\text{ V}$$

We wish to determine (a) the range of V_o and (b) if both of the circuits will produce the full range of V_o given that the dc supplies are ± 10 V.

SOLUTION

a. Given that $V_o = 8\,V_1 - 4\,V_2$ and the range for both V_1 and V_2 is $1\text{ V} \le V_1 \le 2\text{ V}$ and $2\text{ V} \le V_2 \le 3\text{ V}$, we find that

$$V_{o\max} = 8(2) - 4(2) = 8\text{ V} \qquad \text{and} \qquad V_{o\min} = 8(1) - 4(3) = -4\text{ V}$$

and thus the range of V_o is -4 V to $+8$ V.

b. Consider first the network in **Fig. 4.19a**. The signal at V_x, which can be derived using the network in Example 4.5, is given by the equation $V_x = 2\,V_1 - V_2$. V_x is a maximum when $V_1 = 2$ V and $V_2 = 2$ V; that is, $V_{x\max} = 2(2) - 2 = 2$ V. The minimum value for V_x occurs when $V_1 = 1$ V and $V_2 = 3$ V; that is, $V_{x\min} = 2(1) - 3 = -1$ V. Since both the max and min values are within the supply range of ± 10 V, the first op-amp in Fig. 4.19a will not saturate. The output of the second op-amp in this circuit is given by the expression $V_o = 4\,V_x$. Therefore, the range of V_o is $-4\text{ V} \le V_o \le 8\text{ V}$. Since this range is also within the power supply voltages, the second op-amp will not saturate, and this circuit will produce the full range of V_o.

Next, consider the network in **Fig. 4.19b**. The signal $V_y = -8\,V_1$ and so the range of V_y is $-16\text{ V} \le V_y \le -8\text{ V}$ and the range of V_y is outside the power supply limits. This circuit will saturate and fail to produce the full range of V_o.

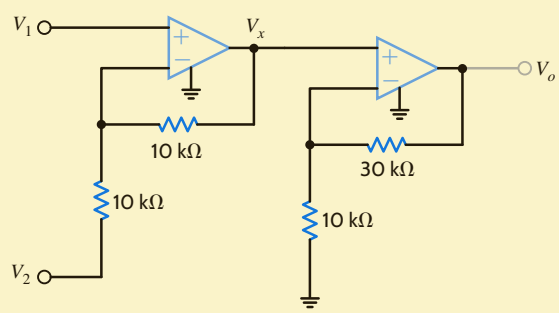

(a)

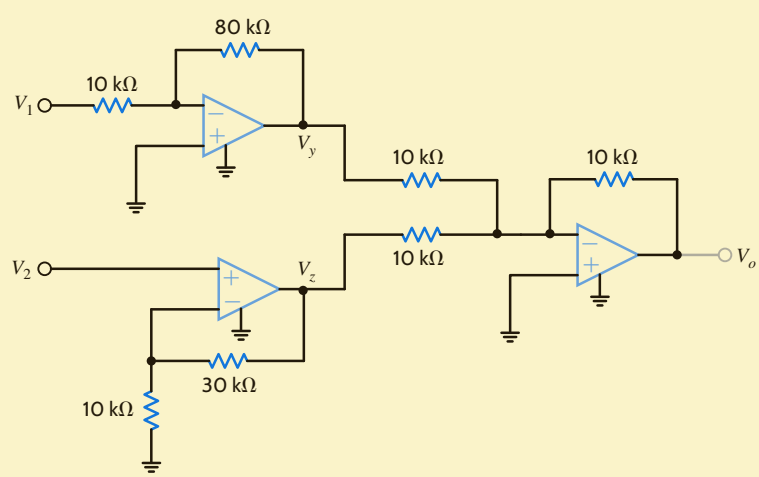

(b)

Figure 4.19
Circuits used in Example 4.7.

If you review the op-amp circuits presented in this chapter to this point, you will note one common characteristic of all circuits. The output is connected to the inverting input of the op-amp through a resistive network. This connection where a portion of the output voltage is fed back to the inverting input is referred to as negative feedback. Recall from the model of an ideal op-amp that the output voltage is proportional to the voltage difference between the input terminals. Feeding back the output voltage to the negative input terminal maintains this voltage difference near zero to allow linear operation of the op-amp. As a result, negative feedback is necessary for the proper operation of nearly all op-amp circuits. Our analysis of op-amp circuits is based on the assumption that the voltage difference at the input terminals is zero.

Almost all op-amp circuits utilize negative feedback. However, positive feedback is utilized in oscillator circuits, the Schmitt trigger, and the comparator. Let's now consider the circuit in **Fig. 4.20**. This circuit is very similar to the circuit of Fig. 4.13a. However, there is one very important difference. In Fig. 4.20, resistor R_2 is connected to the positive input terminal of the op-amp instead of the negative input. Connecting the output terminal to the positive input terminal results in positive feedback. As a result of the positive feedback, the output value of this op-amp circuit has two possible values, V_{CC} or V_{EE}. Analysis of this circuit using the ideal op-amp model presented in this chapter does not predict this result. It is important to remember that the ideal op-amp model may only be utilized when negative feedback is present in the op-amp circuit.

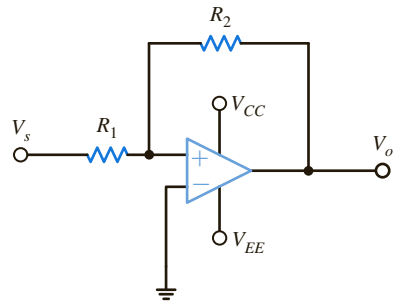

Figure 4.20
Op-amp circuit with positive feedback.

SUMMARY

- Op-amps are characterized by:
  - High-input resistance
  - Low-output resistance
  - Very high gain
- The ideal op-amp is modeled using

$$i_+ = i_- = 0$$
$$v_+ = v_-$$

- Op-amp problems are typically analyzed by writing node equations at the op-amp input terminals.

PROBLEMS

4.1 An amplifier has a gain of 15 and the input waveform shown in Fig. P4.1. Draw the output waveform.

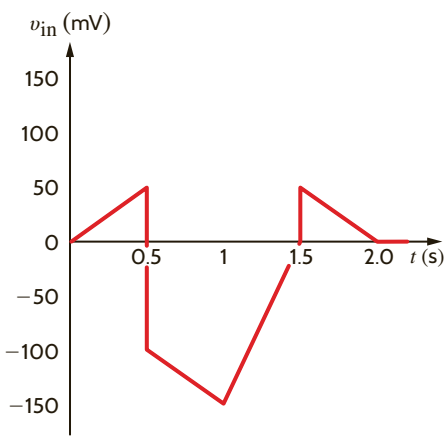

Figure P4.1

4.2 An amplifier has a gain of −5 and the output waveform shown in Fig. P4.2. Sketch the input waveform.

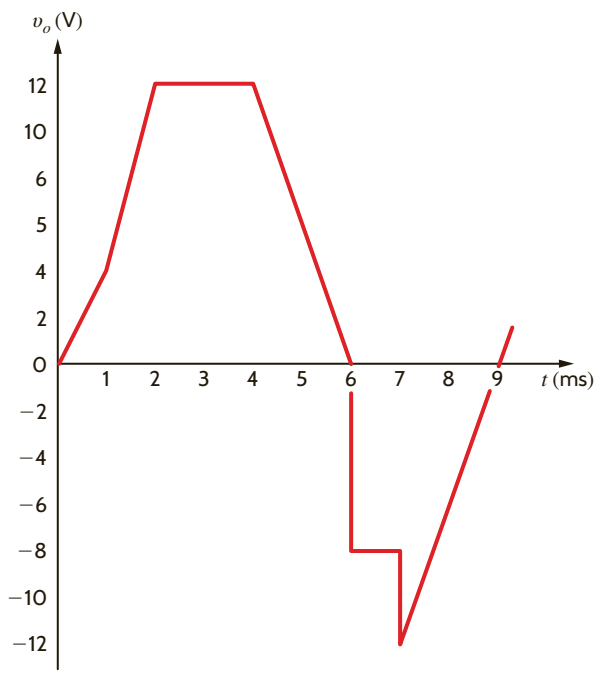

Figure P4.2

4.3 An op-amp based amplifier has supply voltages of ±5 V and a gain of 20.

(a) Sketch the input waveform from the output waveform in Fig. P4.3.

(b) Double the amplitude of your results in (a) and sketch the new output waveform.

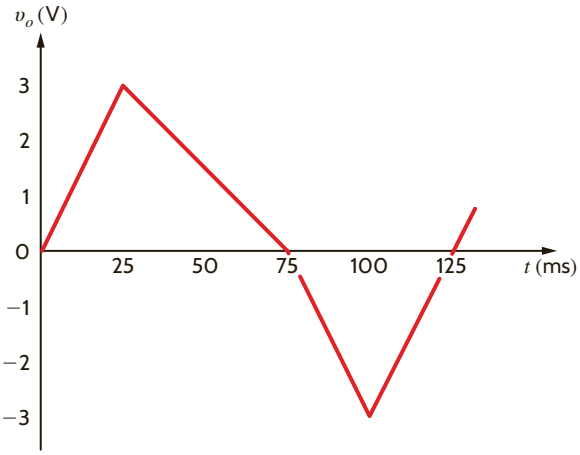

Figure P4.3

4.4 For an ideal op-amp, the voltage gain and input resistance are infinite while the output resistance is zero. What are the consequences for

(a) the op-amp's input voltage?

(b) the op-amp's input currents?

(c) the op-amp's output current?

4.5 Revisit your answers in Problem 4.4 under the following nonideal scenarios.

(a) $R_{in} = \infty$, $R_{out} = 0$, $A_o \neq \infty$.

(b) $R_{in} = \infty$, $R_{out} > 0$, $A_o = \infty$.

(c) $R_{in} \neq \infty$, $R_{out} = 0$, $A_o = \infty$.

4.6 Revisit the exact analysis of the inverting configuration in Section 4.3.

(a) Find an expression for the gain if $R_{in} = \infty$, $R_{out} = 0$, and $A_o \neq \infty$.

(b) Plot the ratio of the gain in (a) to the ideal gain versus A_o for $1 \leq A_o \leq 1000$ for an ideal gain of -10.

(c) From your plot, does the actual gain approach the ideal value as A_o increases or decreases?

(d) From your plot, what is the minimum value of A_o if the actual gain is within 5% of the ideal case?

4.7 Revisit the exact analysis of the inverting amplifier in Section 4.3.

(a) Find an expression for the voltage gain if $R_{in} \neq \infty$, $R_{out} = 0$, and $A_o \neq \infty$.

(b) For $R_2 = 27$ kΩ and $R_1 = 3$ kΩ, plot the ratio of the actual gain to the ideal gain for $A_o = 1000$ and $1\ \text{k}\Omega \leq R_{in} \leq 100\ \text{k}\Omega$.

(c) From your plot, does the ratio approach unity as R_{in} increases or decreases?

(d) From your plot in (b), what is the minimum value of R_{in} if the gain ratio is to be at least 0.98?

4.8 An op-amp based amplifier has ±18 V supplies and a gain of −80. Over what input range is the amplifier linear?

4.9 Assuming an ideal op-amp, determine the voltage gain of the circuit in Fig. P4.9.

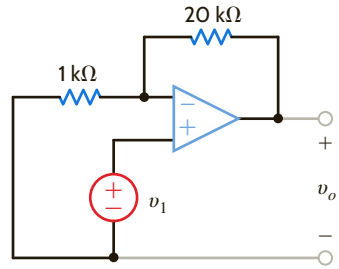

Figure P4.9

4.10 Assuming an ideal op-amp, determine the voltage gain of the circuit in Fig. P4.10.

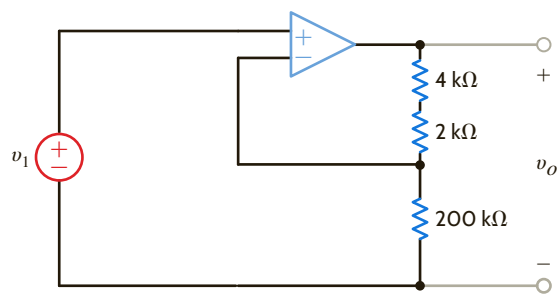

Figure P4.10

4.11 Assuming an ideal op-amp in Fig. P4.11, determine the value of R_X that will produce a voltage gain of 26.

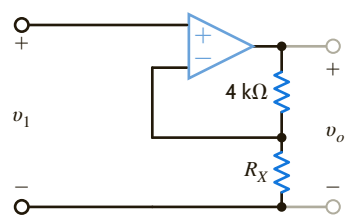

Figure P4.11

4.12 Assuming an ideal op-amp, find the voltage gain of the network in Fig. P4.12.

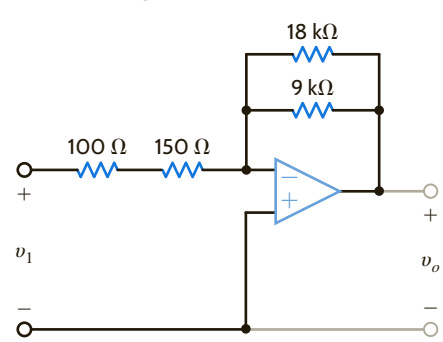

Figure P4.12

4.13 Assuming an ideal op-amp in Fig. P4.13, determine the output voltage V_o.

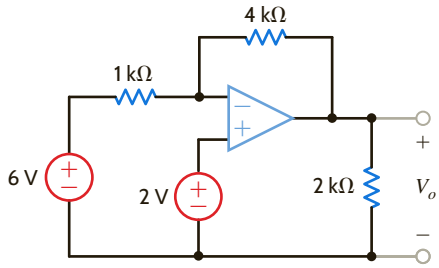

Figure P4.13

4.14 Determine the gain of the amplifier in Fig. P4.14. What is the value of I_o?

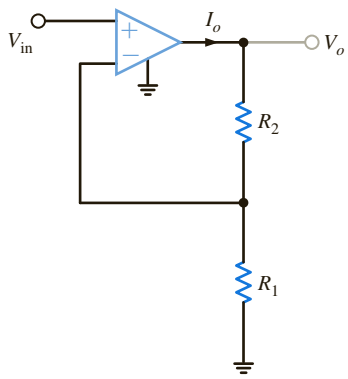

$R_2 = 20$ kΩ
$R_1 = 3.3$ kΩ
$V_{in} = 2$ V

Figure P4.14

4.15 For the amplifier in Fig. P4.15, find the gain and I_o.

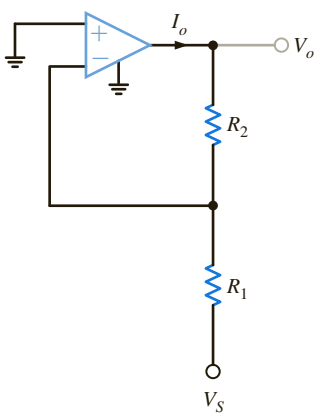

$R_2 = 20$ kΩ
$R_1 = 3.3$ kΩ
$V_S = 2$ V

Figure P4.15

4.16 Using the ideal op-amp assumptions, determine the values of V_o and I_1 in Fig. P4.16.

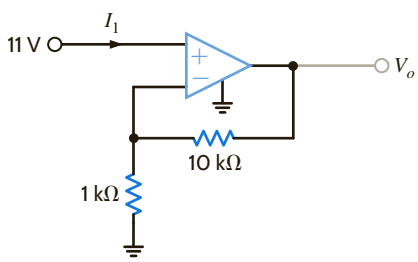

Figure P4.16

4.17 Using the ideal op-amp assumptions, determine I_1, I_2, and I_3 in Fig. P4.17.

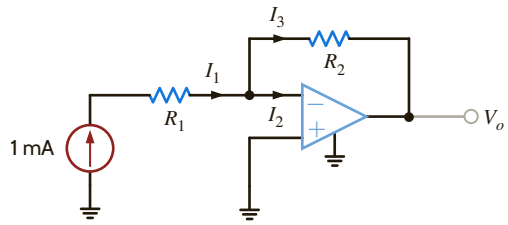

Figure P4.17

4.18 In a useful application, the amplifier drives a load. The circuit in Fig. P4.18 models this scenario.

(a) Sketch the gain V_o/V_S for $10\ \Omega \le R_L \le \infty$.

(b) Sketch I_o for $10\ \Omega \le R_L \le \infty$ if $V_S = 0.1$ V.

(c) Repeat (b) if $V_S = 1.0$ V.

(d) What is the minimum value of R_L if $|I_o|$ must be less than 100 mA for $|V_S| < 0.5$ V?

(e) What is the current I_S if R_L is 100 Ω? Repeat for $R_L = 10$ kΩ.

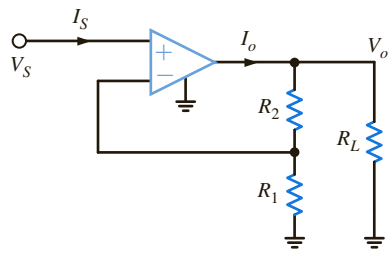

$R_2 = 27$ kΩ
$R_1 = 3$ kΩ

Figure P4.18

4.19 The op-amp in the amplifier in Fig. P4.19 operates with ±15 V supplies and can output no more than 200 mA. What is the maximum gain allowable for the amplifier if the maximum value of V_S is 1 V?

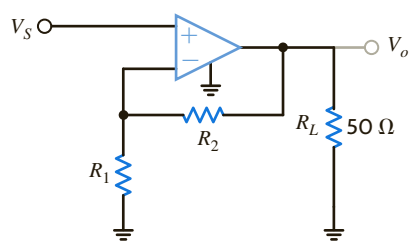

$R_1 + R_2 = 10$ kΩ

Figure P4.19

4.20 For the amplifier in Fig. P4.20, the maximum value of V_S is 2 V and the op-amp can deliver no more than 100 mA.

(a) If ±10 V supplies are used, what is the maximum allowable value of R_2?

(b) Repeat for ±3 V supplies.

(c) Discuss the impact of the supplies on the maximum allowable gain.

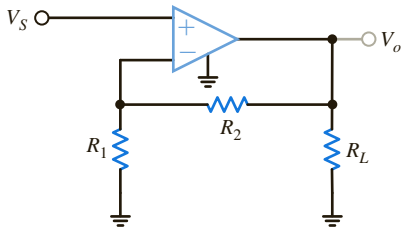

$R_L = 10\ \text{k}\Omega$

$R_1 = 100\ \text{k}\Omega$

Figure P4.20

4.21 For the circuit in Fig. P4.21,

(a) find V_o in terms of V_1 and V_2.

(b) If $V_1 = 2$ V and $V_2 = 6$ V, find V_o.

(c) If the op-amp supplies are ± 12 V, and $V_1 = 4$ V, what is the allowable range of V_2?

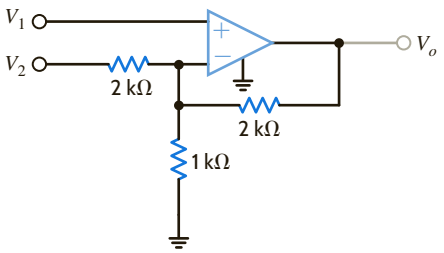

Figure P4.21

4.22 Find V_o in the circuit in Fig. P4.22, assuming that the op-amp is ideal.

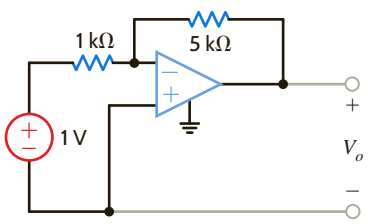

Figure P4.22

4.23 The network in Fig. P4.23 is a current-to-voltage converter or transconductance amplifier. Find v_o/i_S for this network.

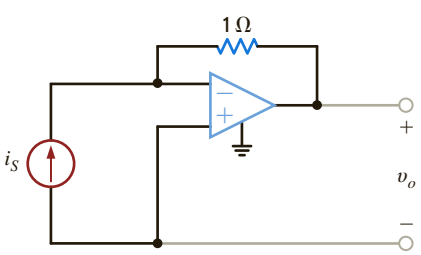

Figure P4.23

4.24 Calculate the transfer function i_o/v_1 for the network shown in Fig. P4.24.

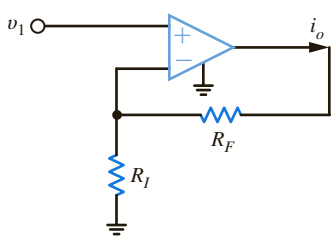

Figure P4.24

4.25 Determine the relationship between v_1 and i_o in the circuit shown in Fig. P4.25.

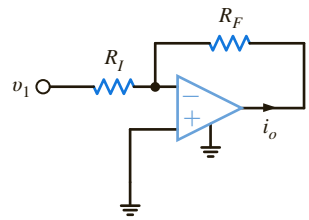

Figure P4.25

4.26 Find V_o in the network in Fig. P4.26 and explain what effect R_1 has on the output.

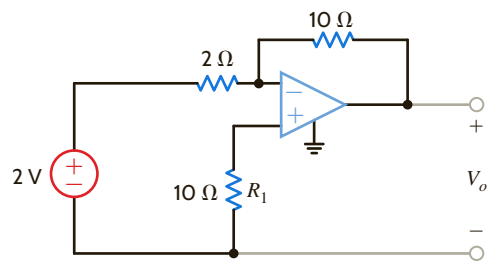

Figure P4.26

4.27 Determine the expression for v_o in the network in Fig. P4.27.

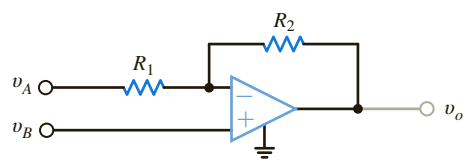

Figure P4.27

4.28 Show that the output of the circuit in Fig. P4.28 is

$$V_o = \left[1 + \frac{R_2}{R_1}\right]V_1 - \frac{R_2}{R_1}V_2$$

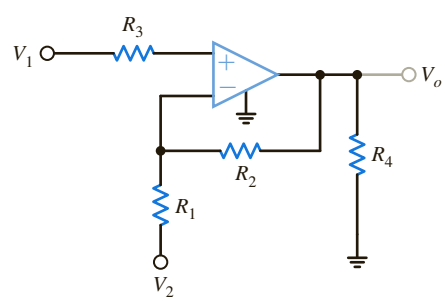

Figure P4.28

4.29 Find V_o in the network in Fig. P4.29.

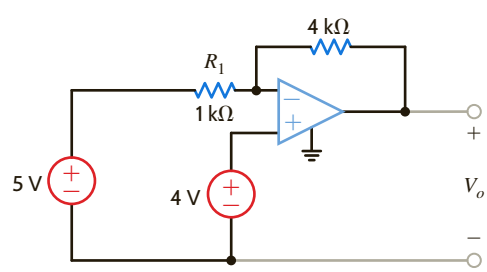

Figure P4.29

4.30 Find the voltage gain of the op-amp circuit shown in Fig. P4.30.

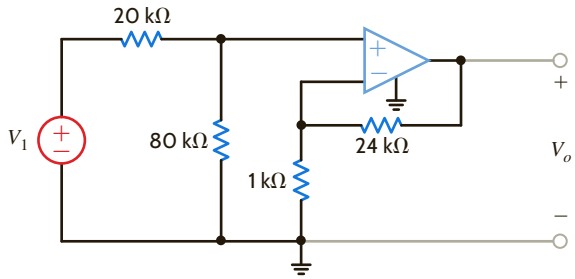

Figure P4.30

4.31 Determine the relationship between v_o and v_{in} in the circuit in Fig. P4.31.

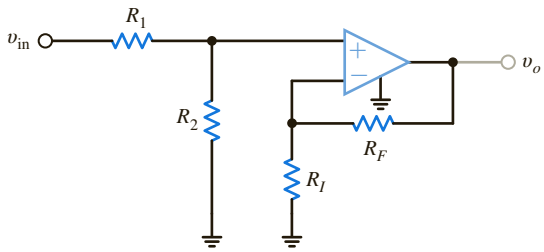

Figure P4.31

4.32 In the network in Fig. P4.32, derive the expression for v_o in terms of the inputs v_1 and v_2.

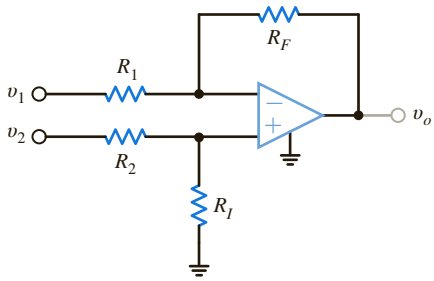

Figure P4.32

4.33 For the circuit in Fig. P4.33, find the value of R_1 that produces a voltage gain of 10.

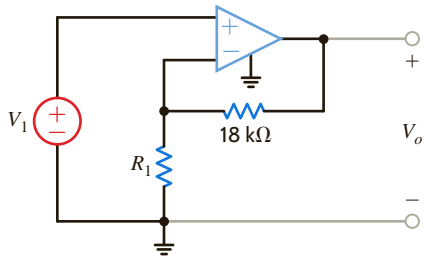

Figure P4.33

4.34 Find V_o in the circuit in Fig. P4.34.

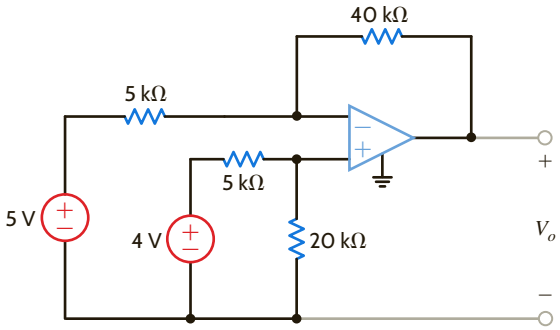

Figure P4.34

4.35 Find V_o in the circuit in Fig. P4.35.

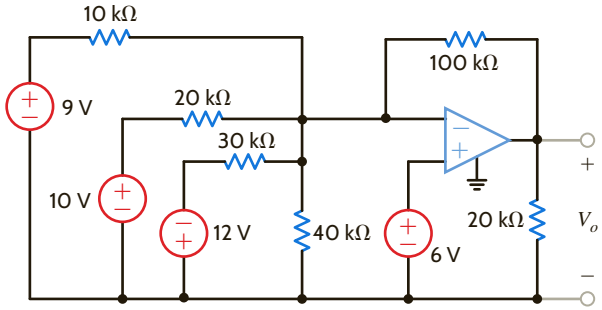

Figure P4.35

4.36 Determine the expression for the output voltage, v_o, of the inverting-summer circuit shown in Fig. P4.36.

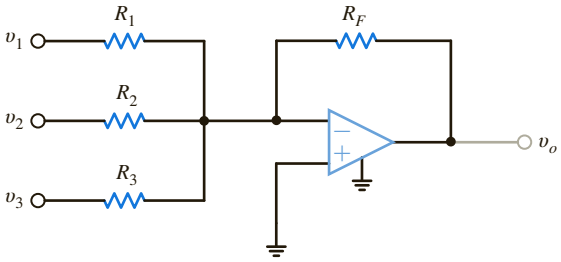

Figure P4.36

4.37 Determine the output voltage, v_o, of the noninverting averaging circuit shown in Fig. P4.37.

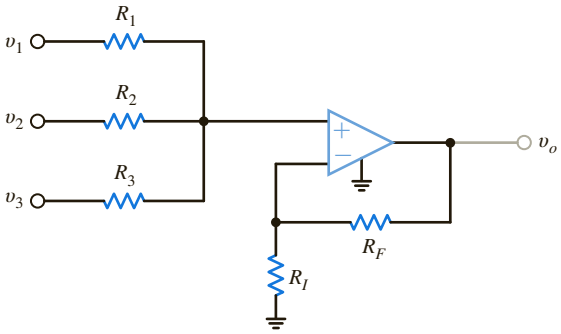

Figure P4.37

4.38 Find the input/output relationship for the current amplifier shown in Fig. P4.38.

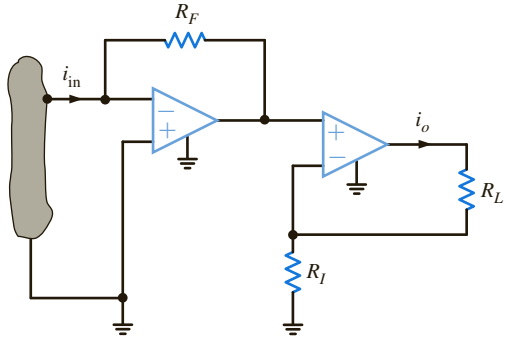

Figure P4.38

4.39 Find V_o in the circuit in Fig. P4.39.

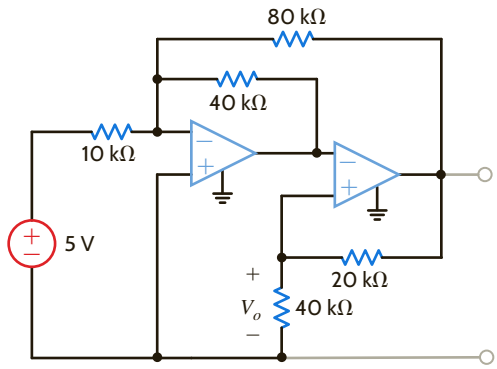

Figure P4.39

4.40 Find v_o in the circuit in Fig. P4.40.

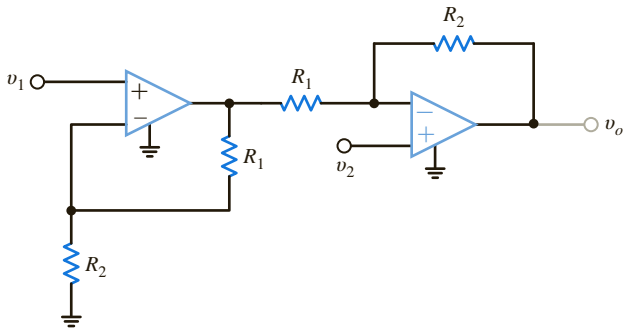

Figure P4.40

4.41 Find the expression for v_o in the differential amplifier circuit shown in Fig. P4.41.

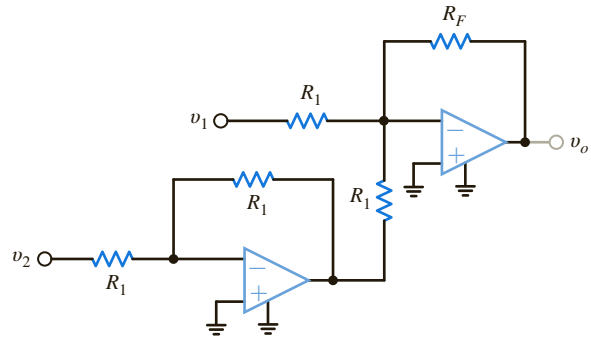

Figure P4.41

4.42 Find v_o in the circuit in Fig. P4.42.

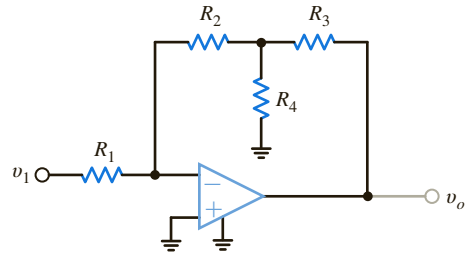

Figure P4.42

4.43 Find the output voltage, v_o, in the circuit in Fig. P4.43.

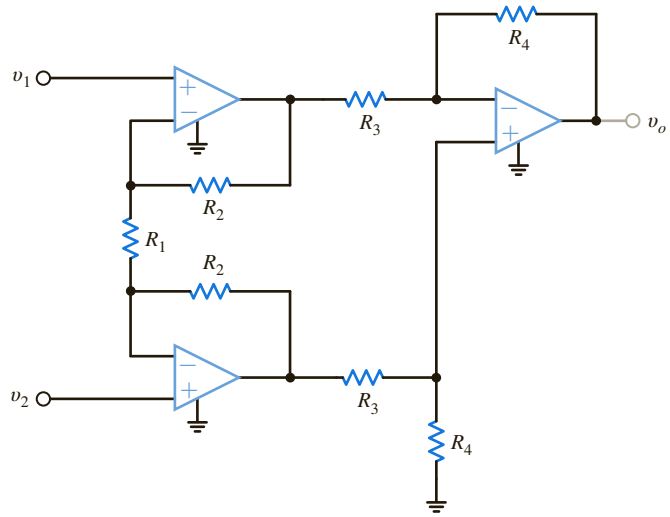

Figure P4.43

4.44 The electronic ammeter in Example 4.7 has been modified and is shown in Fig. P4.44. The selector switch allows the user to change the range of the meter. Using values for R_1 and R_2 from Example 4.7, find the values of R_A and R_B that will yield a 10-V output when the current being measured is 100 mA and 10 mA, respectively.

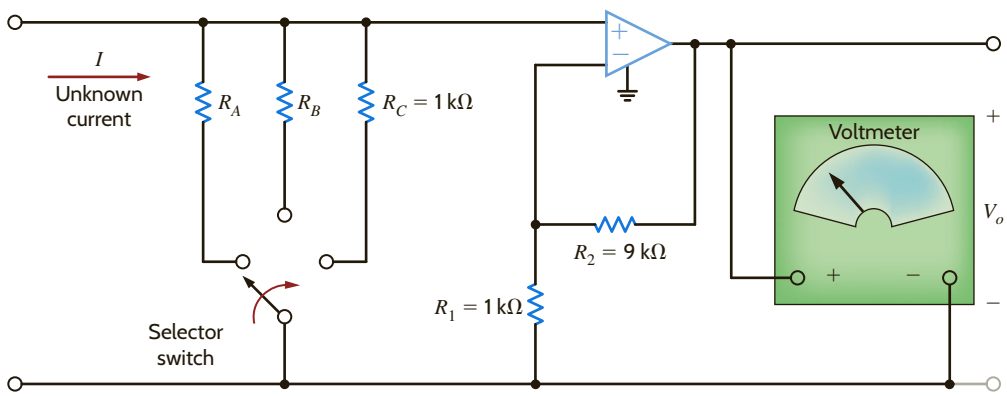

Figure P4.44

TYPICAL PROBLEMS FOUND ON THE FE EXAM

4PFE-1 Given the summing amplifier shown in Fig. 4PFE-1, select the values of R_2 that will produce an output voltage of −3 V.

a. 4.42 kΩ **c.** 3.6 kΩ
b. 6.33 kΩ **d.** 5.14 kΩ

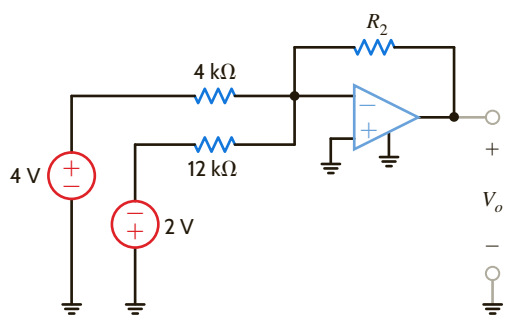

Figure 4PFE-1

4PFE-2 Determine the output voltage V_o of the summing op-amp circuit shown in Fig. 4PFE-2.

a. 6 V **c.** 9 V
b. 18 V **d.** 10 V

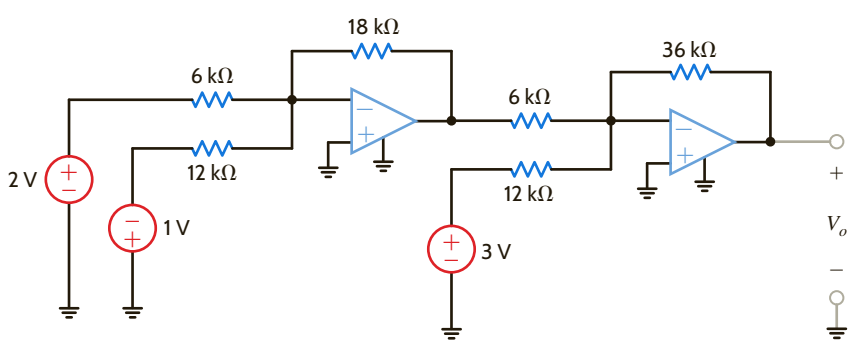

Figure 4PFE-2

4PFE-3 What is the output voltage V_o in Fig. 4PFE-3?

a. −5 V **c.** 4 V
b. 6 V **d.** −7 V

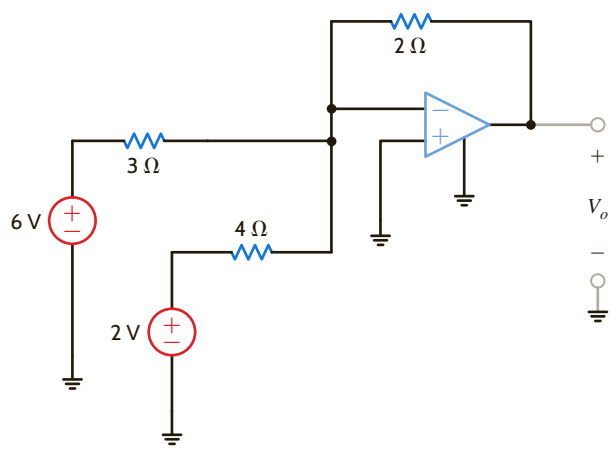

Figure 4PFE-3

4PFE-4 What value of R_f in the op-amp circuit of Fig. 4PFE-4 is required to produce a voltage gain of 50?

a. 135 kΩ **c.** 180 kΩ

b. 210 kΩ **d.** 245 kΩ

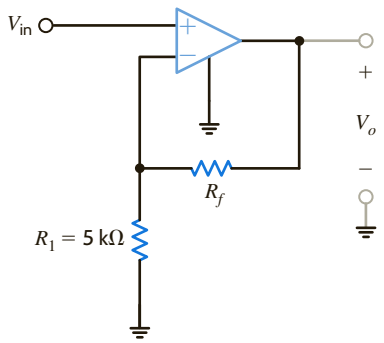

Figure 4PFE-4

4PFE-5 What is the voltage V_o in the circuit in Fig. 4PFE-5?

a. 3 V **c.** 8 V

b. 6 V **d.** 5 V

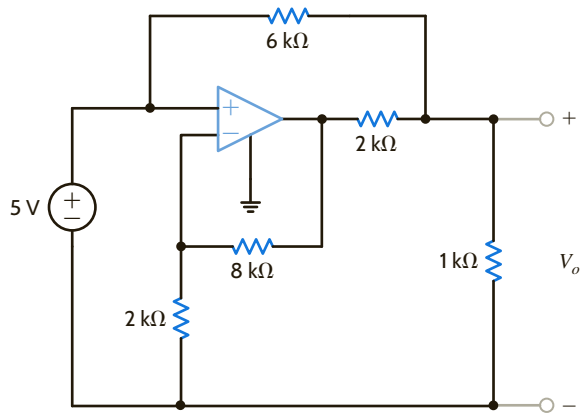

Figure 4PFE-5

Chapter Five

ADDITIONAL ANALYSIS TECHNIQUES

THE LEARNING GOALS FOR THIS CHAPTER ARE THAT STUDENTS SHOULD BE ABLE TO:

- Describe the concepts of linearity and equivalence.
- Analyze electric circuits using the principle of superposition.
- Calculate the Thévenin equivalent circuit for a linear circuit.
- Calculate the Norton equivalent circuit for a linear circuit.
- Apply source transformation appropriately.
- Apply the maximum power transfer theorem to determine the optimal load resistance for a particular circuit.
- Use PSpice, a computer-aided analysis program, to calculate the node voltages and branch currents in electric circuits.

EXPERIMENTS THAT HELP STUDENTS DEVELOP AN UNDERSTANDING OF SUPERPOSITION, SOURCE TRANSFORMATION, AND MAXIMUM POWER TRANSFER ARE:

- Measuring Thévenin Equivalent Resistances: Determine the Thévenin resistances of a power source, the digital multimeter, and oscilloscope measurement and see how these resistances can affect circuit operation and the accuracy of voltage measurements.
- Superposition: Show that superposition applies to linear circuits containing multiple sources by comparing analytical results with PSpice simulations and experimental measurements and use these results to determine the Thévenin equivalent resistance of a resistive network.
- Maximum Power Transfer: Demonstrate the maximum power transfer theorem using a simple audio circuit.

5.1 Introduction

Before introducing additional analysis techniques, let us review some of the topics we have used either explicitly or implicitly in our analyses thus far.

EQUIVALENCE Table 5.1 is a short compendium of some of the equivalent circuits that have been employed in our analyses. This listing serves as a quick review as we begin to look at other techniques that can be used to find a specific voltage or current somewhere in a network and provide additional insight into the network's operation. In addition to the forms listed in the table, it is important to note that a series connection of current sources or a parallel connection of voltage sources is forbidden unless the sources are pointing in the same direction and have exactly the same values.

LINEARITY All the circuits we have analyzed thus far have been linear circuits, which are described by a set of linear algebraic equations. Most of the circuits we will analyze in the remainder of the book will also be linear circuits, and any deviation from this type of network will be specifically identified as such.

TABLE 5.1 Equivalent circuit forms

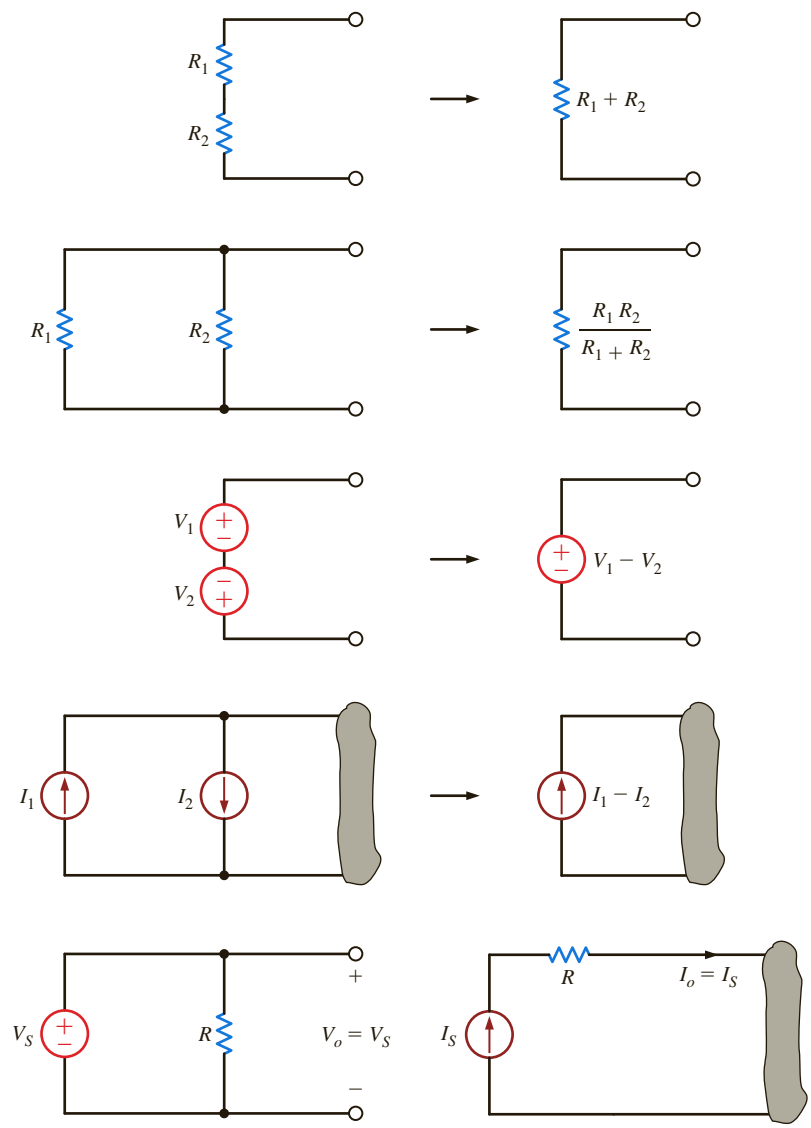

Linearity requires both additivity and homogeneity (scaling). It can be shown that the circuits that we are examining satisfy this important property. The following example illustrates one way in which this property can be used.

EXAMPLE 5.1

For the circuit shown in Fig. 5.1, we wish to determine the output voltage V_{out}. However, rather than approach the problem in a straightforward manner and calculate I_o, then I_1, then I_2, and so on, we will use linearity and simply assume that the output voltage is $V_{out} = 1$ V. This assumption will yield a value for the source voltage. We will then use the actual value of the source voltage and linearity to compute the actual value of V_{out}.

SOLUTION

If we assume that $V_{out} = V_2 = 1$ V, then

$$I_2 = \frac{V_2}{2\text{k}} = 0.5 \text{ mA}$$

V_1 can then be calculated as

$$\begin{aligned} V_1 &= 4\text{k}I_2 + V_2 \\ &= 3 \text{ V} \end{aligned}$$

Hence,

$$I_1 = \frac{V_1}{3\text{k}} = 1\text{mA}$$

Now, applying KCL,

$$I_o = I_1 + I_2 = 1.5 \text{ mA}$$

Then

$$\begin{aligned} V_o &= 2\text{k}I_o + V_1 \\ &= 6 \text{ V} \end{aligned}$$

Therefore, the assumption that $V_{out} = 1$ V produced a source voltage of 6 V. However, since the actual source voltage is 12 V, the actual output voltage is 1 V(12/6) = 2 V.

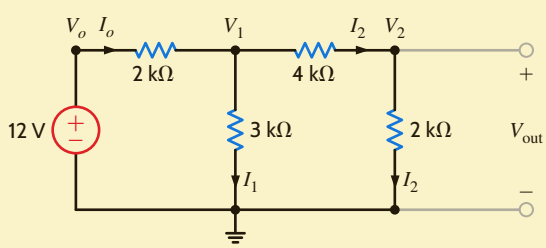

Figure 5.1
Circuit used in Example 5.1.

LEARNING ASSESSMENTS

E5.1 Use linearity and the assumption that $I_o = 1$ mA to compute the correct current I_o in the circuit in Fig. E5.1 if $I = 6$ mA.

ANSWER:
$I_o = 3$ mA.

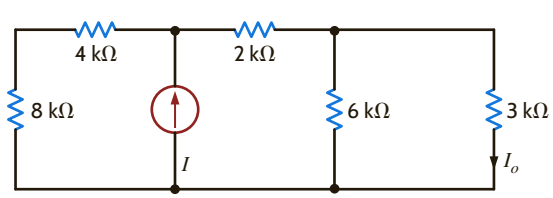

Figure E5.1

E5.2 Find V_o in Fig. E5.2 using linearity and the assumption that $V_o = 1$ V.

ANSWER:
$V_o = 5/3$ V.

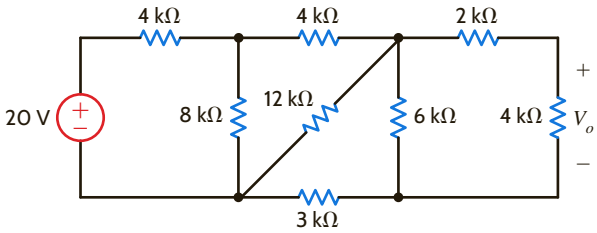

Figure E5.2

5.2 Superposition

EXAMPLE 5.2

To provide motivation for this subject, let us examine the simple circuit of **Fig. 5.2a**, in which two sources contribute to the current in the network. The actual values of the sources are left unspecified so that we can examine the concept of superposition.

SOLUTION

The mesh equations for this network are

$$6\text{k}i_1(t) - 3\text{k}i_2(t) = v_1(t)$$
$$-3\text{k}i_1(t) + 9\text{k}i_2(t) = -v_2(t)$$

Solving these equations for $i_1(t)$ yields

$$i_1(t) = \frac{v_1(t)}{5\text{k}} - \frac{v_2(t)}{15\text{k}}$$

In other words, the current $i_1(t)$ has a component due to $v_1(t)$ and a component due to $v_2(t)$. In view of the fact that $i_1(t)$ has two components, one due to each independent source, it would be interesting to examine what each source acting alone would contribute to $i_1(t)$. For $v_1(t)$ to act alone, $v_2(t)$ must be zero. As we pointed out in Chapter 2, $v_2(t) = 0$ means that the source $v_2(t)$ is replaced with a short circuit. Therefore, to determine the value of $i_1(t)$ due to $v_1(t)$ only, we employ the circuit in **Fig. 5.2b** and refer to this value of $i_1(t)$ as $i_1'(t)$.

$$i_1'(t) = \frac{v_1(t)}{3\text{k} + \dfrac{(3\text{k})(6\text{k})}{3\text{k} + 6\text{k}}} = \frac{v_1(t)}{5\text{k}}$$

Let us now determine the value of $i_1(t)$ due to $v_2(t)$ acting alone and refer to this value as $i_1''(t)$. Using the network in **Fig. 5.2c**,

$$i_2''(t) = -\frac{v_2(t)}{6\text{k} + \dfrac{(3\text{k})(3\text{k})}{3\text{k} + 3\text{k}}} = \frac{-2v_2(t)}{15\text{k}}$$

Then, using current division, we obtain

$$i_1''(t) = \frac{-2v_2(t)}{15\text{k}}\left(\frac{3\text{k}}{3\text{k} + 3\text{k}}\right) = \frac{-v_2(t)}{15\text{k}}$$

Figure 5.2
Circuits used to illustrate superposition.

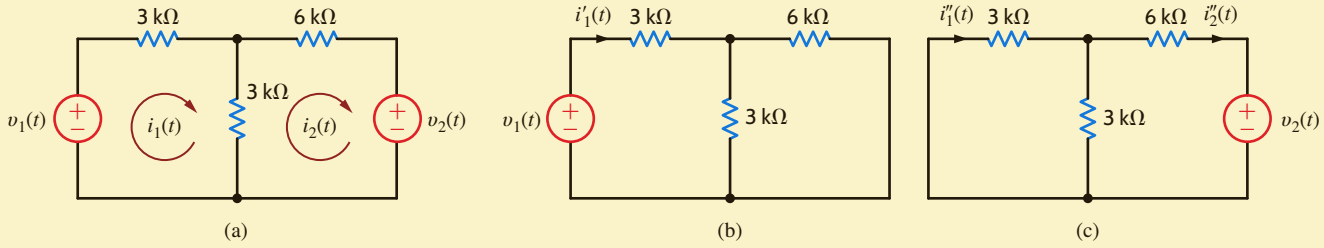

Now, if we add the values of $i_1'(t)$ and $i_1''(t)$, we obtain the value computed directly; that is,

$$i_1(t) = i_1'(t) + i_1''(t) = \frac{v_1(t)}{5\text{k}} - \frac{v_2(t)}{15\text{k}}$$

Note that we have *superposed* the value of $i_1'(t)$ on $i_1''(t)$, or vice versa, to determine the unknown current.

What we have demonstrated in Example 5.2 is true in general for linear circuits and is a direct result of the property of linearity. *The principle of superposition*, which provides us with this ability to reduce a complicated problem to several easier problems—each containing only a single independent source—states that

> In any linear circuit containing multiple independent sources, the current or voltage at any point in the network may be calculated as the algebraic sum of the individual contributions of each source acting alone.

When determining the contribution due to an independent source, any remaining voltage sources are made zero by replacing them with short circuits, and any remaining current sources are made zero by replacing them with open circuits.

Although superposition can be used in linear networks containing dependent sources, it is not useful in this case since the dependent source is never made zero.

As the previous example indicates, superposition provides some insight in determining the contribution of each source to the variable under investigation.

We will now demonstrate superposition with two examples and then provide a problem-solving strategy for the use of this technique. For purposes of comparison, we will also solve the networks using both node and loop analyses. Furthermore, we will employ these same networks when demonstrating subsequent techniques, if applicable.

EXAMPLE 5.3

Let us use superposition to find V_o in the circuit in Fig. 5.3a.

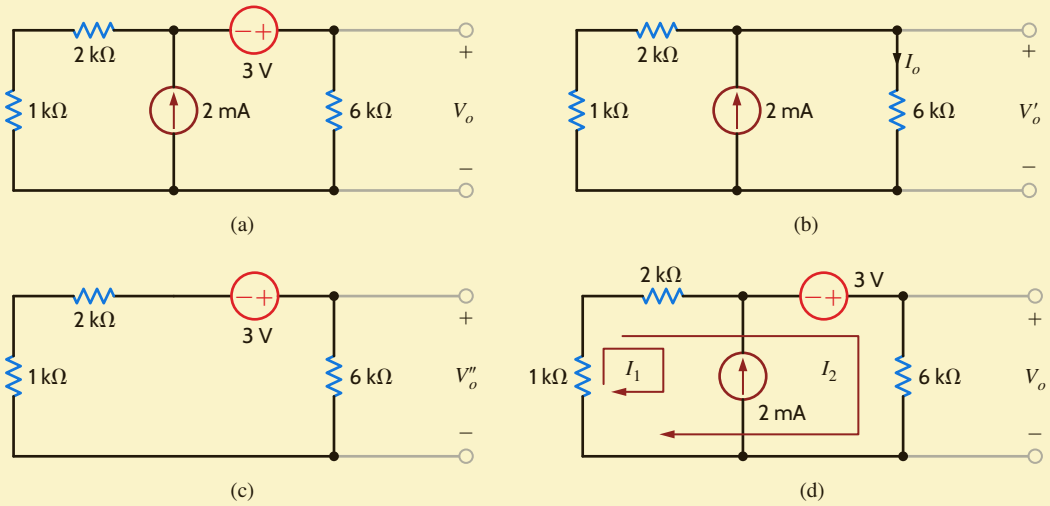

Figure 5.3
Circuits used in Example 5.3.

SOLUTION

The contribution of the 2-mA source to the output voltage is found from the network in Fig. 5.3b, using current division

$$I_o = (2 \times 10^{-3})\left(\frac{1\text{k} + 2\text{k}}{1\text{k} + 2\text{k} + 6\text{k}}\right) = \frac{2}{3}\ \text{mA}$$

and

$$V_o' = I_o\,(6\text{k}) = 4\ \text{V}$$

The contribution of the 3-V source to the output voltage is found from the circuit in **Fig. 5.3c**. Using voltage division,

$$V_o'' = 3\left(\frac{6\text{k}}{1\text{k} + 2\text{k} + 6\text{k}}\right)$$
$$= 2\text{ V}$$

Therefore,

$$V_o = V_o' + V_o'' = 6\text{ V}$$

Although we used two separate circuits to solve the problem, both were very simple.

If we use nodal analysis and Fig. 5.3a to find V_o and recognize that the 3-V source and its connecting nodes form a supernode, V_o can be found from the node equation

$$\frac{V_o - 3}{1\text{k} + 2\text{k}} - 2 \times 10^{-3} + \frac{V_o}{6\text{k}} = 0$$

which yields $V_o = 6$ V. In addition, loop analysis applied as shown in **Fig. 5.3d** produces the equations

$$I_1 = -2 \times 10^{-3}$$

and

$$3\text{k}(I_1 + I_2) - 3 + 6\text{k}I_2 = 0$$

which yield $I_2 = 1$ mA and hence $V_o = 6$ V.

EXAMPLE 5.4

Consider now the network in **Fig. 5.4a**. Let us use superposition to find V_o.

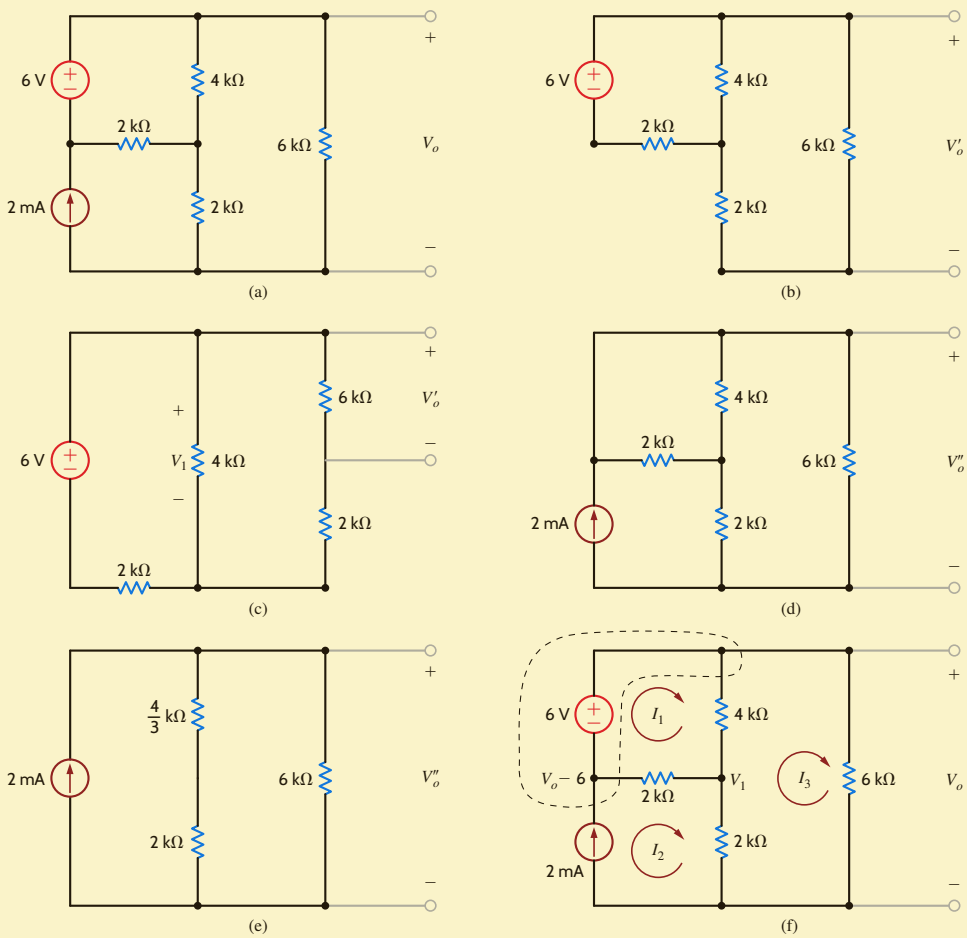

Figure 5.4
Circuits used in Example 5.4.

SOLUTION

The contribution of the 6-V source to V_0 is found from the network in **Fig. 5.4b**, which is redrawn in **Fig. 5.4c**. The 2 kΩ + 6 kΩ = 8-kΩ resistor and 4-kΩ resistor are in parallel, and their combination is an 8/3-kΩ resistor. Then, using voltage division,

$$V_1 = 6\left(\frac{\frac{8}{3}\text{k}}{\frac{8}{3}\text{k} + 2\text{k}}\right) = \frac{24}{7}\text{ V}$$

Applying voltage division again,

$$V_o' = V_1\left(\frac{6\text{k}}{6\text{k} + 2\text{k}}\right) = \frac{18}{7}\text{ V}$$

The contribution of the 2-mA source is found from **Fig. 5.4d**, which is redrawn in **Fig. 5.4e**. V_o'' is simply equal to the product of the current source and the parallel combination of the resistors; that is,

$$V_o'' = (2 \times 10^{-3})\left(\frac{10}{3}\text{k}//6\text{k}\right) = \frac{30}{7}\text{ V}$$

Then

$$V_o = V_o' + V_o'' = \frac{48}{7}\text{ V}$$

A nodal analysis of the network can be performed using **Fig. 5.4f**. The equation for the supernode is

$$-2 \times 10^{-3} + \frac{(V_o - 6) - V_1}{2\text{k}} + \frac{V_o - V_1}{4\text{k}} + \frac{V_o}{6\text{k}} = 0$$

The equation for the node labeled V_1 is

$$\frac{V_1 - V_o}{4\text{k}} + \frac{V_1 - (V_o - 6)}{2\text{k}} + \frac{V_1}{2\text{k}} = 0$$

Solving these two equations, which already contain the constraint equation for the supernode, yields $V_o = 48/7$ V.

Once again, referring to the network in Fig. 5.4f, the mesh equations for the network are

$$-6 + 4\text{k}(I_1 - I_3) + 2\text{k}(I_1 - I_2) = 0$$
$$I_2 = 2 \times 10^{-3}$$
$$2\text{k}(I_3 - I_2) + 4\text{k}\,(I_3 - I_1) + 6\text{k}I_3 = 0$$

Solving these equations, we obtain $I_3 = 8/7$ mA and, hence, $V_o = 48/7$ V.

PROBLEM-SOLVING STRATEGY

APPLYING SUPERPOSITION

STEP 1. In a network containing multiple independent sources, each source can be applied independently with the remaining sources turned off.

STEP 2. To turn off a voltage source, replace it with a short circuit, and to turn off a current source, replace it with an open circuit.

STEP 3. When the individual sources are applied to the circuit, all the circuit laws and techniques we have learned, or will soon learn, can be applied to obtain a solution.

STEP 4. The results obtained by applying each source independently are then added together algebraically to obtain a solution.

Superposition can be applied to a circuit with any number of dependent and independent sources. In fact, superposition can be applied to such a network in a variety of ways. For example, a circuit with three independent sources can be solved using each source acting alone, as we have just demonstrated, or we could use two at a time and sum the result with that obtained from the third acting alone. In addition, the independent sources do not have to assume their actual value or zero. However, it is mandatory that the sum of the different values chosen add to the total value of the source.

Superposition is a fundamental property of linear equations and, therefore, can be applied to any effect that is linearly related to its cause. In this regard it is important to point out that although superposition applies to the current and voltage in a linear circuit, it cannot be used to determine power because power is a nonlinear function.

LEARNING ASSESSMENTS

E5.3 Compute V_o in the circuit in Fig. E5.3 using superposition.

ANSWER:
$V_o = \frac{4}{3}$ V.

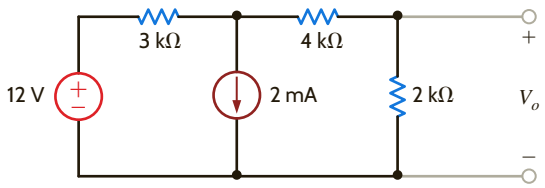

Figure E5.3

E5.4 Find V_0 in Fig. E5.4 using superposition.

ANSWER:
$V_0 = 5.6$ V.

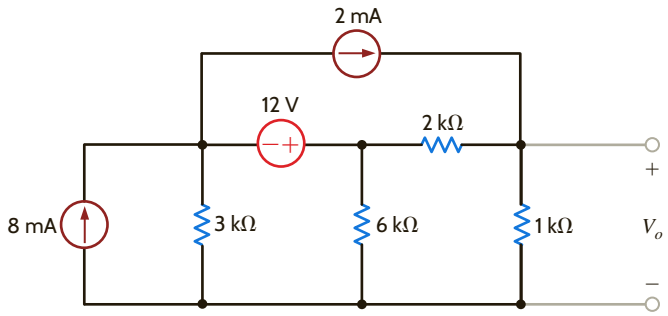

Figure E5.4

E5.5 Find I_0 in Fig. E5.5 using superposition.

ANSWER:
$I_0 = -2/3$ mA.

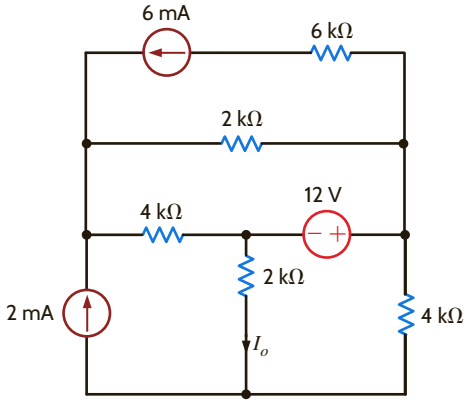

Figure E5.5

5.3 Thévenin's and Norton's Theorems

Thus far we have presented a number of techniques for circuit analysis. At this point we will add two theorems to our collection of tools that will prove to be extremely useful. The theorems are named after their authors, M. L. Thévenin, a French engineer, and E. L. Norton, a scientist formerly with Bell Telephone Laboratories.

Suppose that we are given a circuit and that we wish to find the current, voltage, or power that is delivered to some resistor of the network, which we will call the load. *Thévenin's theorem* tells us that we can replace the entire network, exclusive of the load, by an equivalent circuit that contains only an independent voltage source in series with a resistor in such a way that the current–voltage relationship at the load is unchanged. *Norton's theorem* is identical to the preceding statement except that the equivalent circuit is an independent current source in parallel with a resistor.

Note that this is a very important result. It tells us that if we examine any network from a pair of terminals, we know that with respect to those terminals, the entire network is equivalent to a simple circuit consisting of an independent voltage source in series with a resistor or an independent current source in parallel with a resistor.

In developing the theorems, we will assume that the circuit shown in **Fig. 5.5a** can be split into two parts, as shown in **Fig. 5.5b**. In general, circuit B is the load and may be linear or nonlinear. Circuit A is the balance of the original network exclusive of the load and must be linear. As such, circuit A may contain independent sources, dependent sources and resistors, or any other linear element. We require, however, that a dependent source and its control variable appear in the same circuit.

Circuit A delivers a current i to circuit B and produces a voltage v_o across the input terminals of circuit B. From the standpoint of the terminal relations of circuit A, we can replace circuit B by a voltage source of v_o volts (with the proper polarity), as shown in **Fig. 5.5c**. Since the terminal voltage is unchanged and circuit A is unchanged, the terminal current i is unchanged.

Now, applying the principle of superposition to the network shown in Fig. 5.5c, the total current i shown in the figure is the sum of the currents caused by all the sources in circuit A and the source v_o that we have just added. Therefore, via superposition the current i can be written

$$i = i_o + i_{sc} \tag{5.1}$$

where i_o is the current due to v_o with all independent sources in circuit A made zero (i.e., voltage sources replaced by short circuits and current sources replaced by open circuits), and i_{sc} is the short-circuit current due to all sources in circuit A with v_o replaced by a short circuit.

The terms i_o and v_o are related by the equation

$$i_o = \frac{-v_o}{R_{Th}} \tag{5.2}$$

where R_{Th} is the equivalent resistance looking back into circuit A from terminals A-B with all independent sources in circuit A made zero.

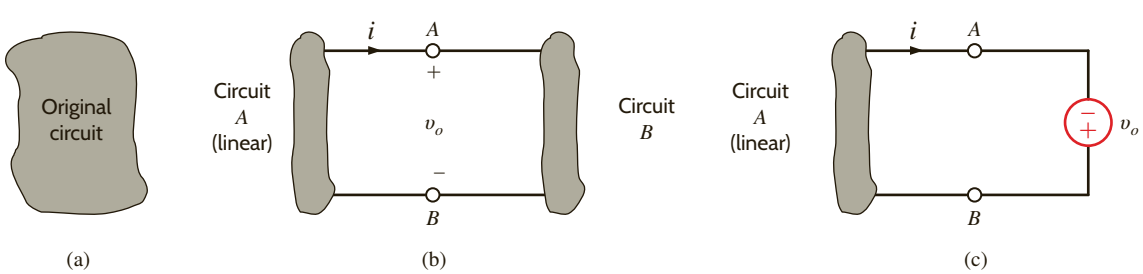

Figure 5.5

Concepts used to develop Thévenin's theorem.

Substituting Eq. (5.2) into Eq. (5.1) yields

$$i = -\frac{v_o}{R_{\text{Th}}} + i_{\text{sc}} \tag{5.3}$$

This is a general relationship and, therefore, must hold for any specific condition at terminals *A-B*. As a specific case, suppose that the terminals are open-circuited. For this condition, $i = 0$ and v_o is equal to the open-circuit voltage v_{oc}. Thus, Eq. (5.3) becomes

$$i = 0 = \frac{-v_{\text{oc}}}{R_{\text{Th}}} + i_{\text{sc}} \tag{5.4}$$

Hence,

$$v_{\text{oc}} = R_{\text{Th}} i_{\text{sc}} \tag{5.5}$$

This equation states that the open-circuit voltage is equal to the short-circuit current times the equivalent resistance looking back into circuit *A* with all independent sources made zero. We refer to R_{Th} as the Thévenin equivalent resistance.

Substituting Eq. (5.5) into Eq. (5.3) yields

$$i = \frac{-v_o}{R_{\text{Th}}} + \frac{v_{\text{oc}}}{R_{\text{Th}}}$$

or

$$v_o = v_{\text{oc}} - R_{\text{Th}} i \tag{5.6}$$

Let us now examine the circuits that are described by these equations. The circuit represented by Eq. (5.6) is shown in **Fig. 5.6a**. The fact that this circuit is equivalent at terminals *A-B* to circuit *A* in Fig. 5.5 is a statement of *Thévenin's theorem*. The circuit represented by Eq. (5.3) is shown in Fig. 5.6b. The fact that this circuit is equivalent at terminals *A-B* to circuit *A* in Fig. 5.5 is a statement of *Norton's theorem*.

Having demonstrated that there is an inherent relationship between the Thévenin equivalent circuit and the Norton equivalent circuit, we now proceed to apply these two important and useful theorems. The manner in which these theorems are applied depends on the structure of the original network under investigation. For example, if only independent sources are present, we can calculate the open-circuit voltage or short-circuit current and the Thévenin equivalent resistance. However, if dependent sources are also present, the Thévenin equivalent will be determined by calculating v_{oc} and i_{sc}, since this is normally the best approach for determining R_{Th} in a network containing dependent sources. Finally, if circuit *A* contains no *independent* sources, then both v_{oc} and i_{sc} will necessarily be zero. (Why?) Thus, we cannot determine R_{Th} by $v_{\text{oc}}/i_{\text{sc}}$, since the ratio is indeterminate. We must look for another approach. Notice that if $v_{\text{oc}} = 0$, then the equivalent circuit is merely the unknown resistance R_{Th}. If we apply an external source to circuit *A*—a test source v_t—and determine the current, i_t, which flows into circuit *A* from v_t, then R_{Th} can be determined from $R_{\text{Th}} = v_t/i_t$. Although the numerical value of v_t need not be specified, we could let $v_t = 1$ V and then $R_{\text{Th}} = 1/i_t$. Alternatively, we could use a current source as a test source and let $i_t = 1$ A; then $v_t = (1)R_{\text{Th}}$.

Before we begin our analysis of several examples that will demonstrate the utility of these theorems, remember that these theorems, in addition to being another approach, often

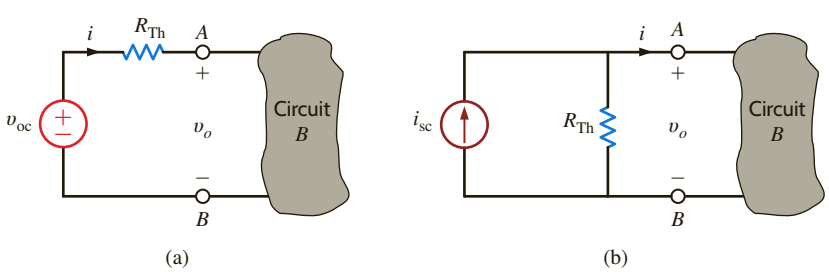

Figure 5.6
(a) Thévenin and (b) Norton equivalent circuits.

permit us to solve several small problems rather than one large one. They allow us to replace a network, no matter how large, *at a pair of terminals* with a Thévenin or Norton equivalent circuit. In fact, we could represent the entire U.S. power grid at a pair of terminals with one of the equivalent circuits. Once this is done, we can quickly analyze the effect of different loads on a network. Thus, these theorems provide us with additional insight into the operation of a specific network.

CIRCUITS CONTAINING ONLY INDEPENDENT SOURCES Consider for a moment some salient features of this example. Note that in applying the theorems there is no point in breaking the network to the left of the 3-V source, since the resistors in parallel with the current source are already a Norton equivalent. Furthermore, once the network has been simplified using a Thévenin or Norton equivalent, we simply have a new network with which we can apply the theorems again. The following example illustrates this approach.

EXAMPLE 5.5

Let us use Thévenin's and Norton's theorems to find V_o in the network in Example 5.3.

SOLUTION

The circuit is redrawn in **Fig. 5.7a**. To determine the Thévenin equivalent, we break the network at the 6-kΩ load as shown in **Fig. 5.7b**. KVL indicates that the open-circuit voltage, V_{oc}, is equal to 3 V plus the voltage V_1, which is the voltage across the current source. The 2 mA from the current source flows through the two resistors (where else could it possibly go!) and, therefore, $V_1 = (2 \times 10^{-3})(1\text{k} + 2\text{k}) = 6$ V. Therefore, $V_{oc} = 9$ V. By making both sources zero, we can find the Thévenin equivalent resistance, R_{Th}, using the circuit in **Fig. 5.7c**. Obviously, $R_{Th} = 3$ kΩ. Now our Thévenin equivalent circuit, consisting of V_{oc} and R_{Th}, is connected back to the original terminals of the load, as shown in **Fig. 5.7d**. Using a simple voltage divider, we find that $V_o = 6$ V.

To determine the Norton equivalent circuit at the terminals of the load, we must find the short-circuit current as shown in **Fig. 5.7e**. Note that the short circuit causes the 3-V source to be directly across (i.e., in parallel with) the resistors and the current source. Therefore, $I_1 = 3/(1\text{k} + 2\text{k}) = 1$ mA. Then, using KCL, $I_{sc} = 3$ mA. We have already determined R_{Th} and, therefore, connecting the Norton equivalent to the load results in the circuit in **Fig. 5.7f**. Hence, V_o is equal to the source current multiplied by the parallel resistor combination, which is 6 V.

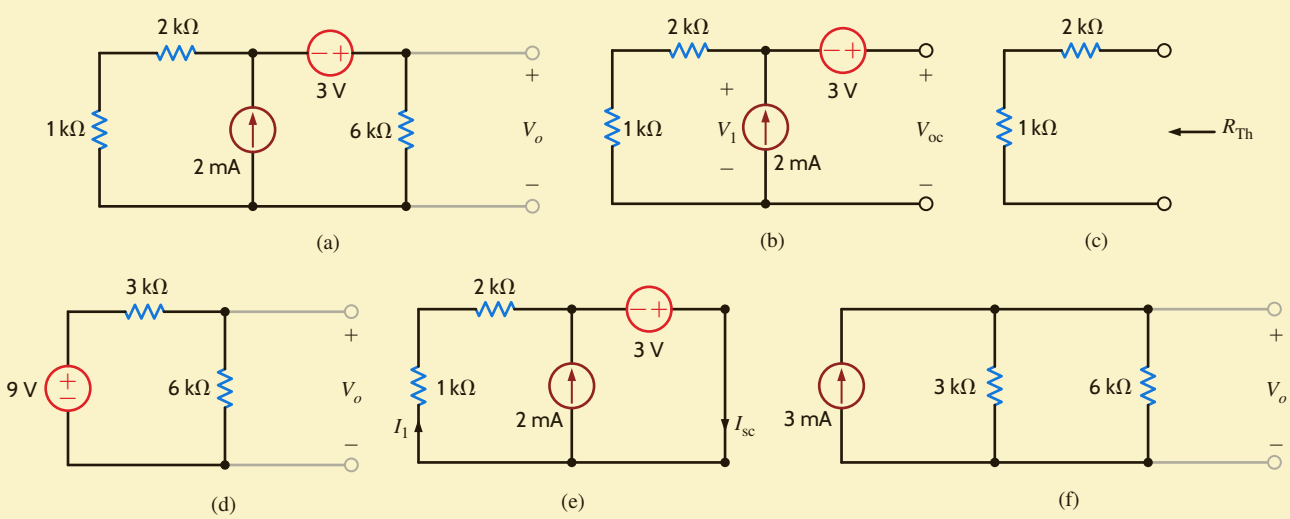

Figure 5.7
Circuits used in Example 5.5.

EXAMPLE 5.6

Let us use Thévenin's theorem to find V_o in the network in **Fig. 5.8a**.

SOLUTION

If we break the network to the left of the current source, the open-circuit voltage V_{oc_1} is as shown in **Fig. 5.8b**. Since there is no current in the 2-kΩ resistor and therefore no voltage across it, V_{oc_1} is equal to the voltage across the 6-kΩ resistor, which can be determined by voltage division as

$$V_{oc_1} = 12\left(\frac{6k}{6k + 3k}\right) = 8 \text{ V}$$

The Thévenin equivalent resistance, R_{Th_1}, is found from **Fig. 5.8c** as

$$R_{Th_1} = 2k + \frac{(3k)(6k)}{3k + 6k} = 4 \text{ k}\Omega$$

Connecting this Thévenin equivalent back to the original network produces the circuit shown in **Fig. 5.8d**. We can now apply Thévenin's theorem again, and this time we break the network to the right of the current source as shown in **Fig. 5.8e**. In this case, V_{oc_2} is

$$V_{oc_2} = (2 \times 10^{-3})(4k) + 8 = 16 \text{ V}$$

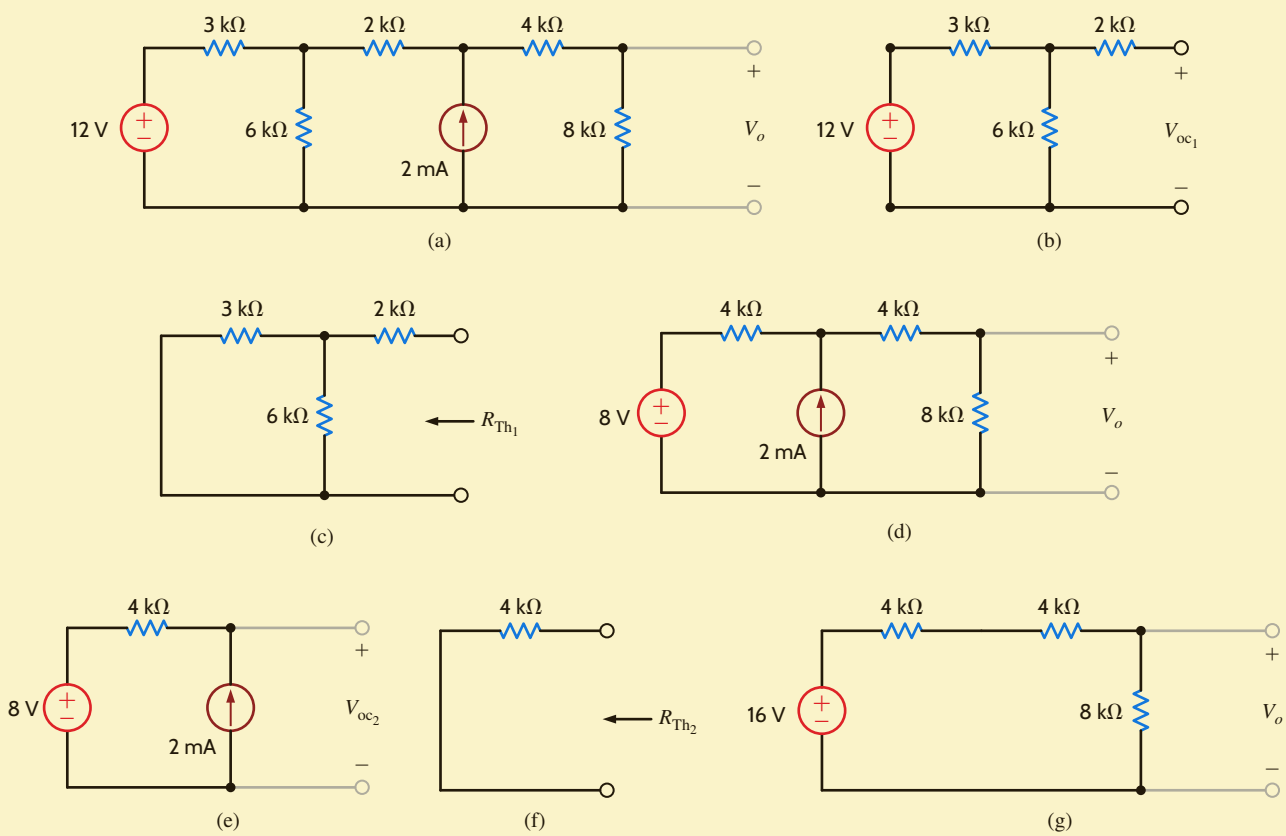

Figure 5.8
Circuits used in Example 5.6.

and R_{Th_2} obtained from **Fig. 5.8f** is 4 kΩ. Connecting this Thévenin equivalent to the remainder of the network produces the circuit shown in **Fig. 5.8g**. Simple voltage division applied to this final network yields $V_o = 8$ V. Norton's theorem can be applied in a similar manner to solve this network; however, we save that solution as an exercise.

EXAMPLE 5.7

SOLUTION

It is instructive to examine the use of Thévenin's and Norton's theorems in the solution of the network in Fig. 5.4a, which is redrawn in **Fig. 5.9a**.

If we break the network at the 6-kΩ load, the open-circuit voltage is found from **Fig. 5.9b**. The equations for the mesh currents are

$$-6 + 4\text{k}I_1 + 2\text{k}(I_1 - I_2) = 0$$

and

$$I_2 = 2 \times 10^{-3}$$

from which we easily obtain $I_1 = 5/3$ mA. Then, using KVL, V_{oc} is

$$\begin{aligned} V_{oc} &= 4\text{k}I_1 + 2\text{k}I_2 \\ &= 4\text{k}\left(\frac{5}{3} \times 10^{-3}\right) + 2\text{k}(2 \times 10^{-3}) \\ &= \frac{32}{3}\,\text{V} \end{aligned}$$

R_{Th} is derived from **Fig. 5.9c** and is

$$R_{Th} = (2\text{k}//4\text{k}) + 2\text{k} = \frac{10}{3}\,\text{k}\Omega$$

Attaching the Thévenin equivalent to the load produces the network in **Fig. 5.9d**. Then using voltage division, we obtain

$$\begin{aligned} V_o &= \frac{32}{3}\left(\frac{6\text{k}}{6\text{k} + \frac{10}{3}\text{k}}\right) \\ &= \frac{48}{7}\,\text{V} \end{aligned}$$

In applying Norton's theorem to this problem, we must find the short-circuit current shown in **Fig. 5.9e**. At this point, the quick-thinking reader stops immediately! Three mesh equations applied to the original circuit will immediately lead to the solution, but the three mesh equations in the circuit in Fig. 5.9e will provide only part of the answer, specifically the short-circuit current. Sometimes the use of the theorems is more complicated than a straightforward attack using node or loop analysis. This would appear to be one of those situations. Interestingly, it is not. We can find I_{sc} from the network in Fig. 5.9e without using the mesh equations. The technique is simple, but a little tricky, and so we ignore it at this time. Having said all these things, let us now finish what we have started. The mesh equations for the network in Fig. 5.9e are

$$\begin{aligned} -6 + 4\text{k}(I_1 - I_{sc}) + 2\text{k}(I_1 - 2 \times 10^{-3}) &= 0 \\ 2\text{k}(I_{sc} - 2 \times 10^{-3}) + 4\text{k}(I_{sc} - I_1) &= 0 \end{aligned}$$

where we have incorporated the fact that $I_2 = 2 \times 10^{-3}$ A. Solving these equations yields $I_{sc} = 16/5$ mA. R_{Th} has already been determined in the Thévenin analysis. Connecting the Norton equivalent to the load results in the circuit in **Fig. 5.9f**. Solving this circuit yields $V_o = 48/7$ V.

Figure 5.9
Circuits used in Example 5.7.

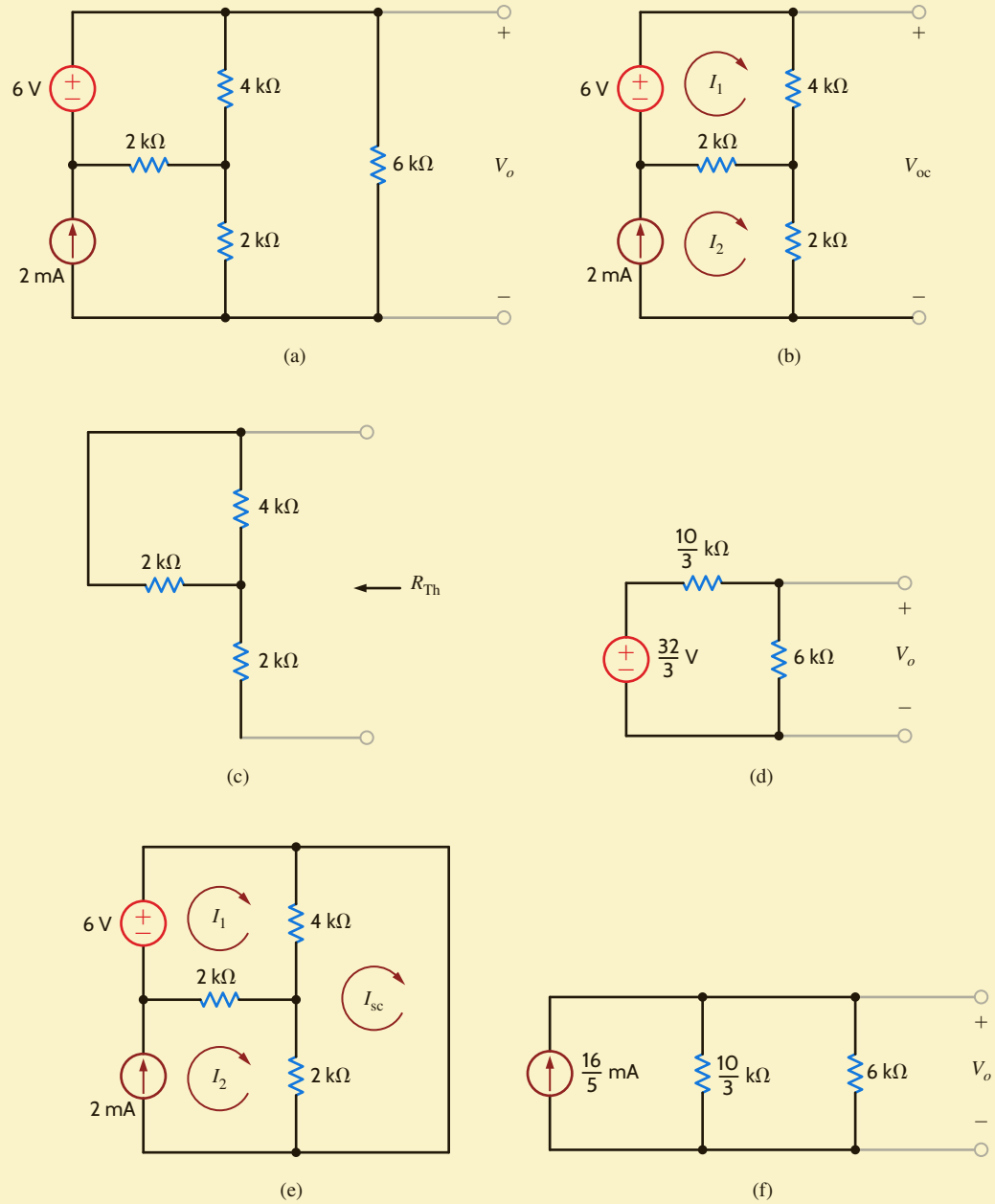

LEARNING ASSESSMENTS

E5.6 Use Thévenin's theorem to find V_o in the network in Fig. E5.6.

ANSWER:

$V_o = -3$ V.

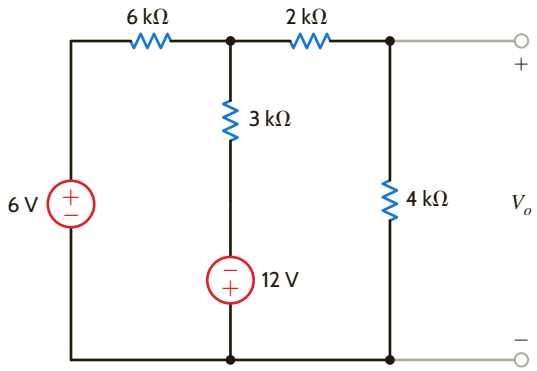

Figure E5.6

E5.7 Find V_o in the circuit in Fig. E5.3 using both Thévenin's and Norton's theorems. When deriving the Norton equivalent circuit, break the network to the left of the 4-kΩ resistor. Why?

ANSWER:
$V_o = \frac{4}{3}$ V.

E5.8 Find V_o in Fig. E5.8 using Thévenin's theorem.

ANSWER:
$V_o = 3.88$ V.

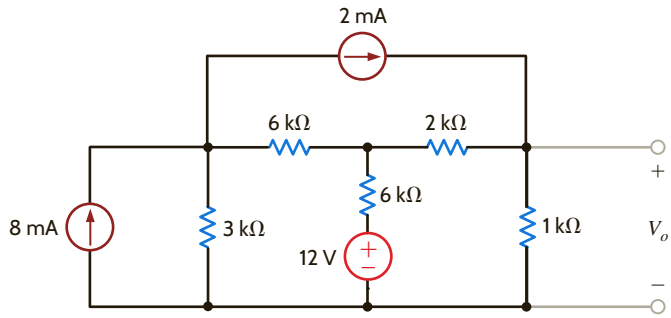

Figure E5.8

E5.9 Find I_0 in Fig. E5.9 using Norton's theorem.

ANSWER:
$I_0 = -0.857$ mA.

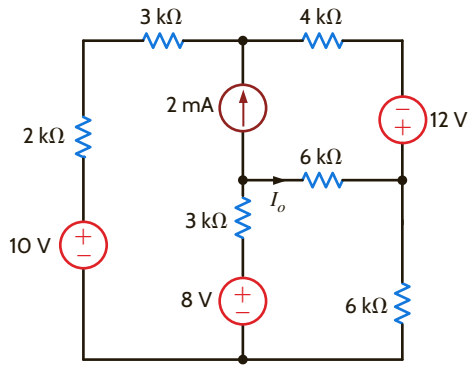

Figure E5.9

CIRCUITS CONTAINING ONLY DEPENDENT SOURCES As we have stated earlier, the Thévenin or Norton equivalent of a network containing only dependent sources is R_{Th}. The following examples will serve to illustrate how to determine this Thévenin equivalent resistance.

EXAMPLE 5.8

We wish to determine the Thévenin equivalent of the network in Fig. 5.10a at the terminals *A*-*B*.

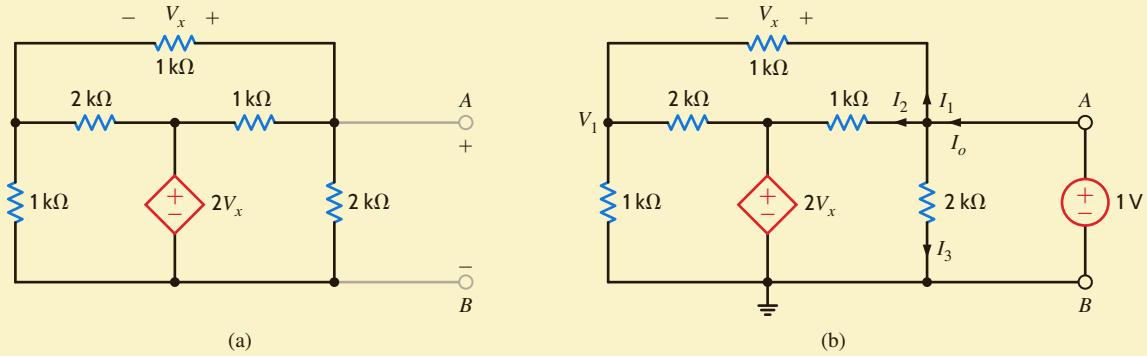

Figure 5.10
Networks employed in Example 5.8.

SOLUTION

Our approach to this problem will be to apply a 1-V source at the terminals as shown in **Fig. 5.10b** and then compute the current I_o and $R_{\text{Th}} = 1/I_o$.

The equations for the network in Fig. 5.10b are as follows. KVL around the outer loop specifies that

$$V_1 + V_x = 1$$

The KCL equation at the node labeled V_1 is

$$\frac{V_1}{1\text{k}} + \frac{V_1 - 2V_x}{2\text{k}} + \frac{V_1 - 1}{1\text{k}} = 0$$

Solving the equations for V_x yields $V_x = 3/7$ V. Knowing V_x, we can compute the currents I_1, I_2, and I_3. Their values are

$$I_1 = \frac{V_x}{1\text{k}} = \frac{3}{7}\text{ mA}$$

$$I_2 = \frac{1 - 2V_x}{1\text{k}} = \frac{1}{7}\text{ mA}$$

$$I_3 = \frac{1}{2\text{k}} = \frac{1}{2}\text{ mA}$$

Therefore,

$$\begin{aligned} I_o &= I_1 + I_2 + I_3 \\ &= \frac{15}{14}\text{ mA} \end{aligned}$$

and

$$\begin{aligned} R_{\text{Th}} &= \frac{1}{I_o} \\ &= \frac{14}{15}\text{ k}\Omega \end{aligned}$$

EXAMPLE 5.9

Let us determine R_{Th} at the terminals A-B for the network in **Fig. 5.11a**.

SOLUTION

Our approach to this problem will be to apply a 1-mA current source at the terminals A-B and compute the terminal voltage V_2 as shown in **Fig. 5.11b**. Then $R_{\text{Th}} = V_2/0.001$.

The node equations for the network are

$$\frac{V_1 - 2000I_x}{2\text{k}} + \frac{V_1}{1\text{k}} + \frac{V_1 - V_2}{3\text{k}} = 0$$

$$\frac{V_2 - V_1}{3\text{k}} + \frac{V_2}{2\text{k}} = 1 \times 10^{-3}$$

and

$$I_x = \frac{V_1}{1\text{k}}$$

Solving these equations yields

$$V_2 = \frac{10}{7}\text{ V}$$

and hence,

$$\begin{aligned} R_{\text{Th}} &= \frac{V_2}{1 \times 10^{-3}} \\ &= \frac{10}{7}\text{ k}\Omega \end{aligned}$$

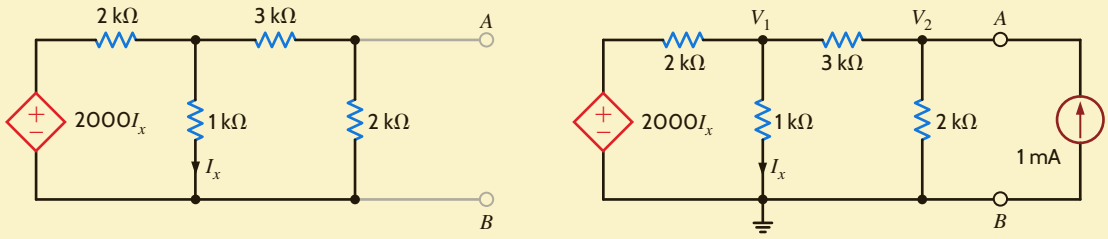

Figure 5.11
Networks used in Example 5.9.

CIRCUITS CONTAINING BOTH INDEPENDENT AND DEPENDENT SOURCES

In these types of circuits we must calculate both the open-circuit voltage and short-circuit current to calculate the Thévenin equivalent resistance. Furthermore, we must remember that we cannot split the dependent source and its controlling variable when we break the network to find the Thévenin or Norton equivalent.

We now illustrate this technique with a circuit containing a current-controlled voltage source.

EXAMPLE 5.10

Let us use Thévenin's theorem to find V_o in the network in **Fig. 5.12a**.

SOLUTION

To begin, we break the network at points *A*-*B*. Could we break it just to the right of the 12-V source? No! Why? The open-circuit voltage is calculated from the network in **Fig. 5.12b**. Note that we now use the source $2000I'_x$ because this circuit is different from that in Fig. 5.12a. KCL for the supernode around the 12-V source is

$$\frac{(V_{oc} + 12) - (-2000I'_x)}{1\text{k}} + \frac{V_{oc} + 12}{2\text{k}} + \frac{V_{oc}}{2\text{k}} = 0$$

where

$$I'_x = \frac{V_{oc}}{2\text{k}}$$

yielding $V_{oc} = -6\text{V}$.

I_{sc} can be calculated from the circuit in **Fig. 5.12c**. Note that the presence of the short circuit forces I''_x to zero and, therefore, the network is reduced to that shown in **Fig. 5.12d**.

Therefore,

$$I_{sc} = \frac{-12}{\frac{2}{3}\text{k}} = -18 \text{ mA}$$

Then

$$R_{Th} = \frac{V_{oc}}{I_{sc}} = \frac{1}{3}\text{k}\Omega$$

Connecting the Thévenin equivalent circuit to the remainder of the network at terminals *A*-*B* produces the circuit in **Fig. 5.12e**. At this point, simple voltage division yields

$$V_o = (-6)\left(\frac{1\text{k}}{1\text{k} + 1\text{k} + \frac{1}{3}\text{k}}\right) = \frac{-18}{7}\text{V}$$

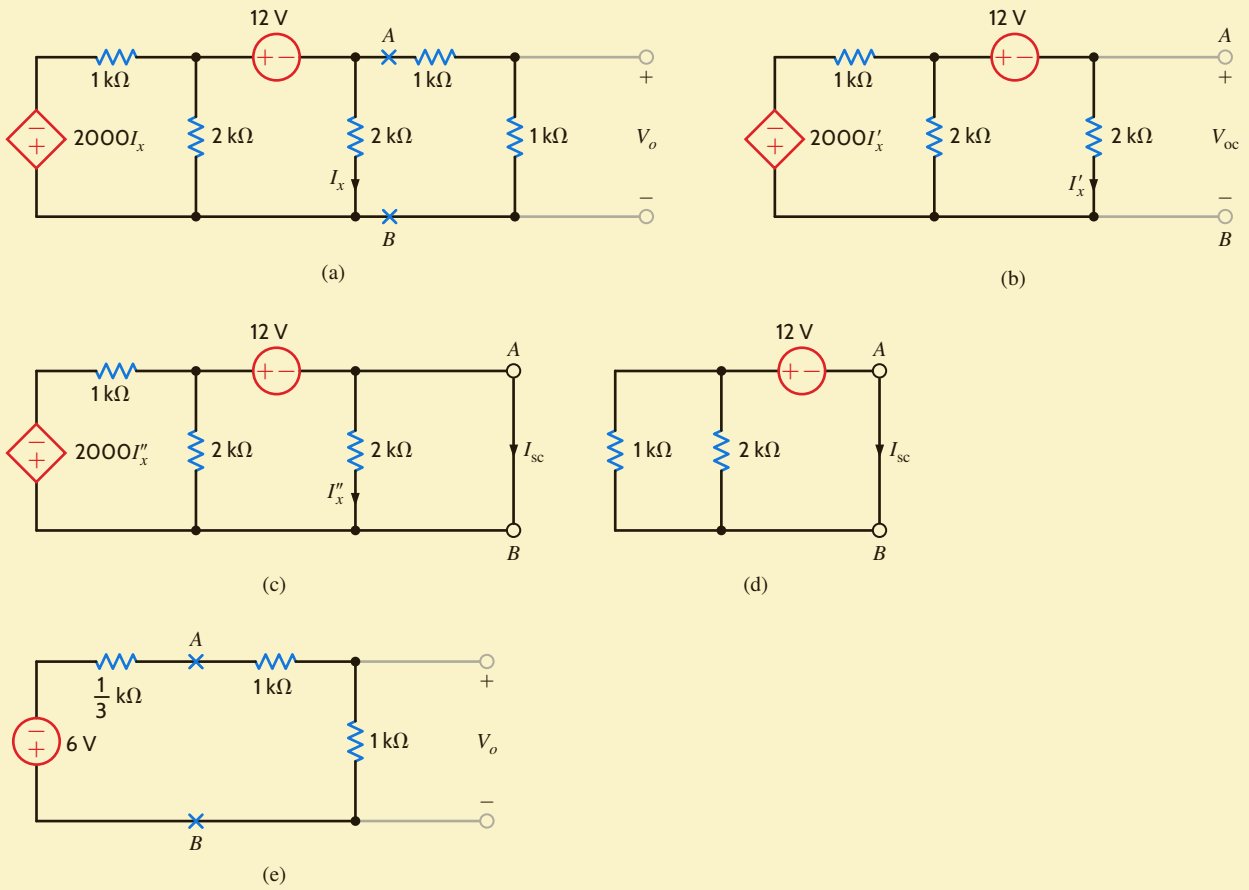

Figure 5.12

Circuits used in Example 5.10.

EXAMPLE 5.11

Let us find the current I_o in the network in **Fig. 5.13a** using Thévenin's theorem.

SOLUTION

V_{oc} is determined from the network shown in **Fig. 5.13b**. The presence of the three loops indicates three equations are required, together with the constraint equation for the dependent source. Since two of the currents are shown to go directly through the current sources, two of the necessary equations are

$$I_1 = \frac{4}{\text{k}}$$

$$I_3 = 2I'_x$$

The third equation is obtained by applying KVL around the two upper loops; that is,

$$1\text{k}(I_1 + I_2) + 12 + 1\text{k}(I_2 - I_3) + 1\text{k}(I_1 + I_2 - I_3) = 0$$

And the constraint equation for the dependent source is

$$I'_x = I_2 - 2I'_x$$

Solving these equations yields

$$I_2 = -\frac{12}{\text{k}}\,\text{A}$$

$$I_3 = -\frac{8}{\text{k}}\,\text{A}$$

Then V_{oc} can be determined from the KVL equation

$$-6 + 1\text{k}(I_3 - I_2 - I_1) + V_{oc} = 0$$

which yields $V_{oc} = 6$ V.

Because of the presence of the dependent source, R_{Th} must be determined from the equation

$$R_{Th} = \frac{V_{oc}}{I_{sc}}$$

I_{sc} is derived from the circuit in **Fig. 5.13c**. The node equation for the supernode is

$$\frac{(V_1 - 6)}{1\text{k}} + \frac{4}{\text{k}} + \frac{(V_1 - 12)}{1\text{k}} + \frac{2(V_1 - 12)}{1\text{k}} = 0$$

which yields $V_1 = 19/2$ V, and since $V_2 = V_1 - 12$, $V_2 = -5/2$ V. Then KCL at the center node is

$$\frac{6}{1\text{k}} + \frac{4}{\text{k}} = \frac{5}{2\text{k}} + I_{sc}$$

Yielding $I_{sc} = 15/2\text{k}$ A, and since $R_{Th} = V_{oc}/I_{sc}$, $R_{Th} = 12\text{k}/15$ ohms. Finally, forming the Thévenin equivalent circuit and connecting up the 1k ohm resistor produces the network in **Fig. 5.13d**. The current I_0 is then

$$I_0 = \frac{6}{\left(\frac{12}{15} + 1\right)}\text{k} = \frac{10}{3\text{k}}\,\text{A}$$

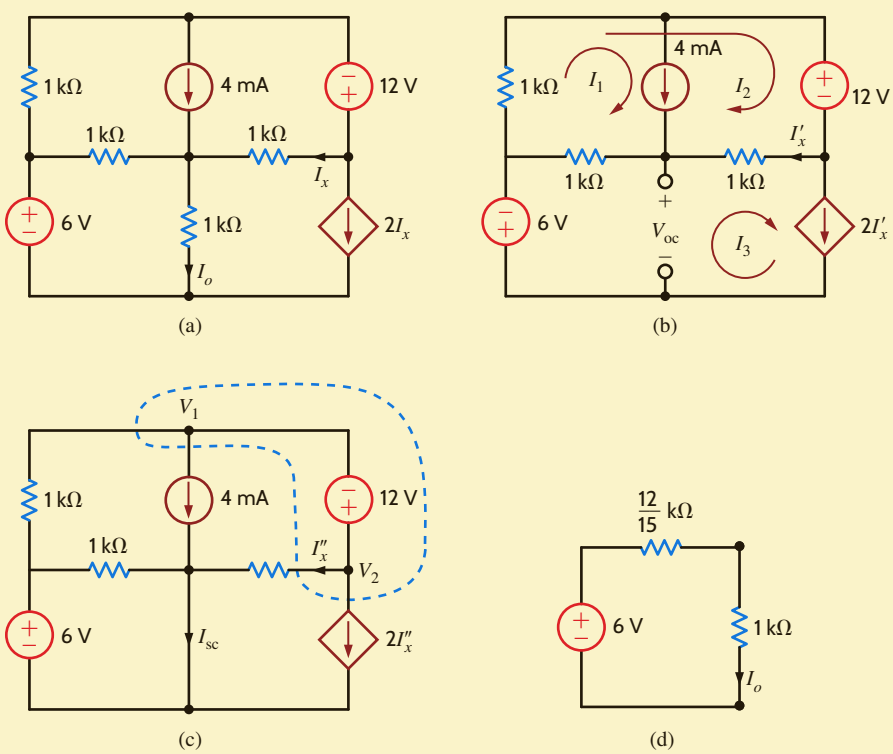

Figure 5.13
Circuits used in Example 5.11.

EXAMPLE 5.12

We will now reexamine a problem that was solved earlier using both nodal and loop analyses. The circuit used in Examples 3.10 and 3.20 is redrawn in **Fig. 5.14a**. Since a dependent source is present, we will have to find the open-circuit voltage and the short-circuit current in order to employ Thévenin's theorem to determine the output voltage V_o.

SOLUTION

As we begin the analysis, we note that the circuit can be somewhat simplified by first forming a Thévenin equivalent for the leftmost and rightmost branches. Note that these two branches are in parallel and neither branch contains the control variable. Thus, we can simplify the network by reducing these two branches to one via a Thévenin equivalent. For the circuit shown in **Fig. 5.14b**, the open-circuit voltage is

$$V_{oc_1} = \frac{2}{k}(1k) + 4 = 6\text{ V}$$

And the Thévenin equivalent resistance at the terminals, obtained by looking into the terminals with the sources made zero, is

$$R_{Th_1} = 1\text{ k}\Omega$$

The resultant Thévenin equivalent circuit is now connected to the remaining portion of the circuit producing the network in **Fig. 5.14c**.

Now we break the network shown in Fig. 5.14c at the output terminals to determine the open-circuit voltage V_{oc_2} as shown in **Fig. 5.14d**. Because of the presence of the voltage sources, we will use a nodal analysis to find the open-circuit voltage with the help of a supernode. The node equations for this network are

$$V_1 = 3V'_x$$
$$\frac{V_1 - 6}{1k} + \frac{V_1 - 2V'_x}{1k} = \frac{2}{k}$$

and thus $V'_x = 2$ V and $V_1 = 6$ V. Then, the open-circuit voltage, obtained using the KVL equation

$$-2V'_x + V_{oc_2} + \frac{2}{k}(1k) = 0$$

is

$$V_{oc_2} = 2\text{ V}$$

The short-circuit current is derived from the network shown in **Fig. 5.14e**. Once again, we employ the supernode, and the network equations are

$$V_2 = 3V''_x$$
$$\frac{V_2 - 6}{1k} + \frac{V_2 - 2V''_x}{1k} = \frac{2}{k}$$

The node voltages obtained from these equations are $V''_x = 2$ V and $V_2 = 6$ V. The line diagram shown in **Fig. 5.14f** displays the node voltages and the resultant branch currents. (Node voltages are shown in the circles, and branch currents are identified with arrows.) The node voltages and resistors are used to compute the resistor currents, while the remaining currents are derived by KCL. As indicated, the short-circuit current is

$$I_{sc_2} = 2\text{ mA}$$

Then, the Thévenin equivalent resistance is

$$R_{Th_2} = \frac{V_{oc_2}}{I_{sc_2}} = 1\text{ k}\Omega$$

The Thévenin equivalent circuit now consists of a 2-V source in series with a 1-kΩ resistor. Connecting this Thévenin equivalent circuit to the load resistor yields the network shown in **Fig. 5.14g**. A simple voltage divider indicates that $V_o = 1$ V.

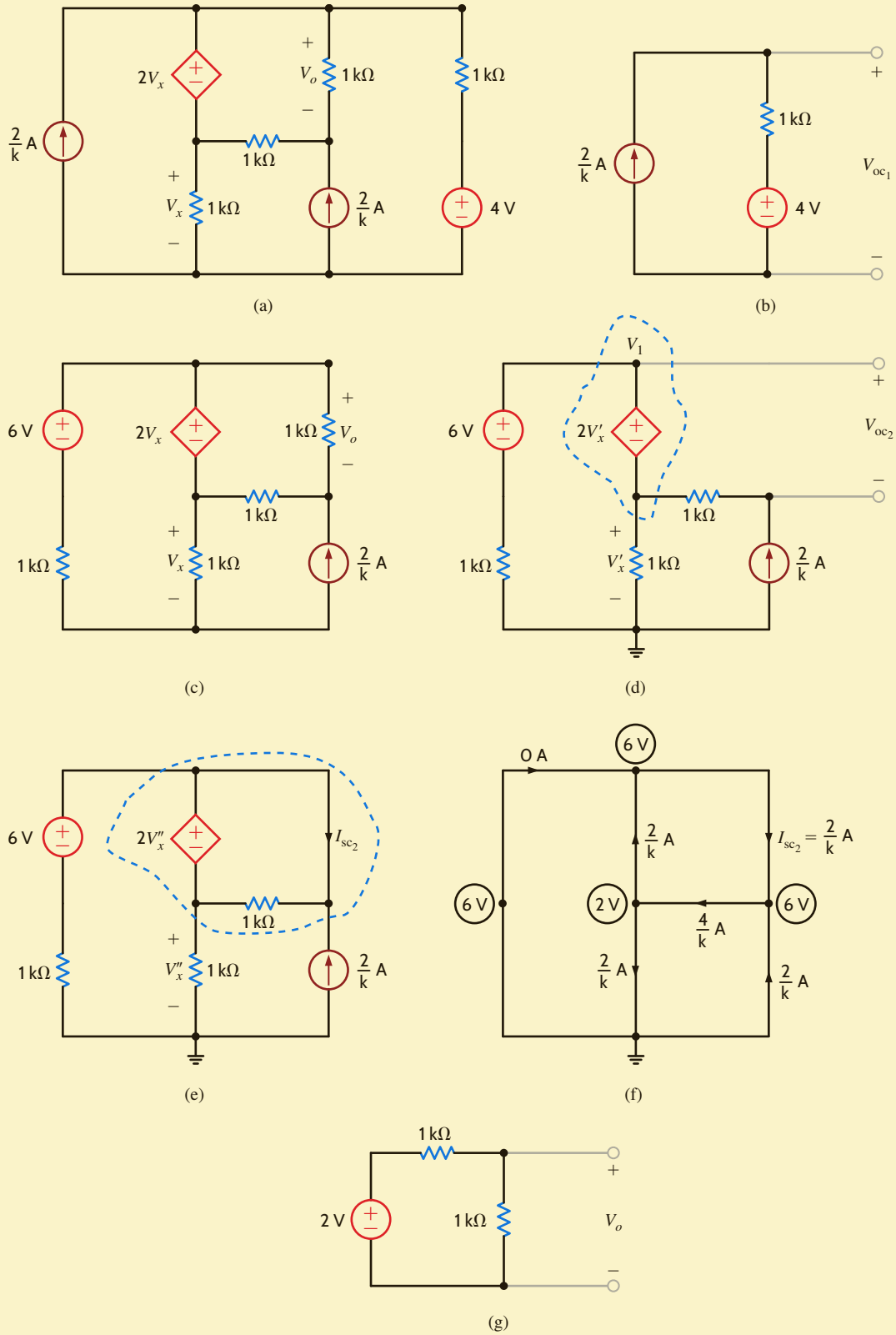

Figure 5.14
Circuits used in Example 5.12.

PROBLEM-SOLVING STRATEGY

APPLYING THÉVENIN'S THEOREM

STEP 1. Remove the load and find the voltage across the open-circuit terminals, V_{oc}. All the circuit analysis techniques presented here can be used to compute this voltage.

STEP 2. Determine the Thévenin equivalent resistance of the network at the open terminals with the load removed. Three different types of circuits may be encountered in determining the resistance, R_{Th}.

(a) If the circuit contains only independent sources, they are made zero by replacing the voltage sources with short circuits and the current sources with open circuits. R_{Th} is then found by computing the resistance of the purely resistive network at the open terminals.

(b) If the circuit contains only dependent sources, an independent voltage or current source is applied at the open terminals and the corresponding current or voltage at these terminals is measured. The voltage/current ratio at the terminals is the Thévenin equivalent resistance. Since there is no energy source, the open-circuit voltage is zero in this case.

(c) If the circuit contains both independent and dependent sources, the open-circuit terminals are shorted and the short-circuit current between these terminals is determined. The ratio of the open-circuit voltage to the short-circuit current is the resistance R_{Th}.

STEP 3. If the load is now connected to the Thévenin equivalent circuit, consisting of V_{oc} in series with R_{Th}, the desired solution can be obtained.

The problem-solving strategy for Norton's theorem is essentially the same as that for Thévenin's theorem, with the exception that we are dealing with the short-circuit current instead of the open-circuit voltage.

LEARNING ASSESSMENTS

E5.10 Find V_o in the circuit in Fig. E5.10 using Thévenin's theorem.

ANSWER:

$V_o = \frac{36}{13}$ V.

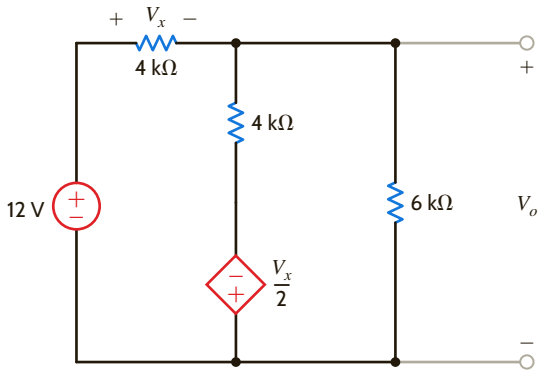

Figure E5.10

E5.11 Find V_o in Fig. E5.11 using Thévenin's theorem.

ANSWER:
$V_o = 6.29$ V.

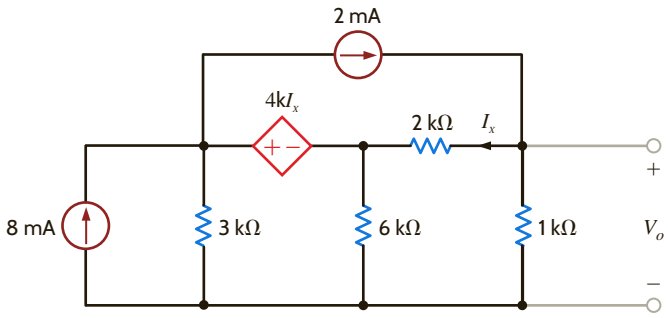

Figure E5.11

E5.12 Use Thévenin's theorem to find the power supplied by the 12-V source in Fig. E5.12.

ANSWER:
8.73 mW.

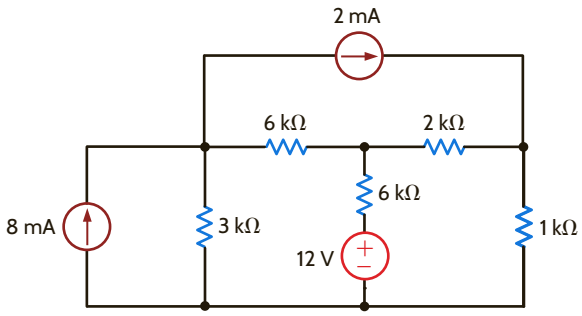

Figure E5.12

E5.13 Find the Thévenin equivalent of the network at terminals $A - B$ in Fig. E5.13.

ANSWER:
$R_{Th} = 1619\ \Omega$.

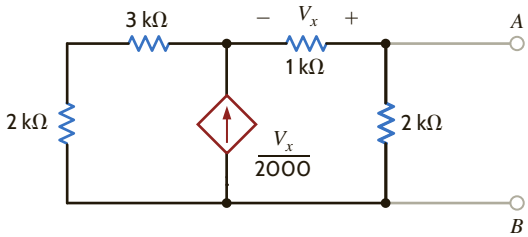

Figure E5.13

Having examined the use of Thévenin's and Norton's theorems in a variety of different types of circuits, it is instructive to look at yet one other aspect of these theorems that we find useful in circuit analysis and design. This additional aspect can be gleaned from the Thévenin equivalent and Norton equivalent circuits.

The relationships specified in Fig. 5.6 and Eq. (5.5) have special significance because they represent what is called a *source transformation* or *source exchange*. What these relationships tell us is that if we have embedded within a network a current source i in parallel with a resistor R, we can replace this combination with a voltage source of value $v = iR$ in series with the resistor R. The reverse is also true; that is, a voltage source v in series with a resistor R can be replaced with a current source of value $i = v/R$ in parallel with the resistor R. Parameters within the circuit (e.g., an output voltage) are unchanged under these transformations.

We must emphasize that the two equivalent circuits in Fig. 5.6 *are equivalent only at the two external nodes*. For example, if we disconnect circuit B from both networks in Fig. 5.6, the equivalent circuit in Fig. 5.6b dissipates power, but the one in Fig. 5.6a does not.

EXAMPLE 5.13

We will now demonstrate how to find V_o in the circuit in **Fig. 5.15a** using the repeated application of source transformation.

SOLUTION

If we begin at the left end of the network in Fig. 5.15a, the series combination of the 12-V source and 3-kΩ resistor is converted to a 4-mA current source in parallel with the 3-kΩ resistor. If we combine this 3-kΩ resistor with the 6-kΩ resistor, we obtain the circuit in **Fig. 5.15b**. Note that at this point we have eliminated one circuit element. Continuing the reduction, we convert the 4-mA source and 2-kΩ resistor into an 8-V source in series with this same 2-kΩ resistor. The two 2-kΩ resistors that are in series are now combined to produce the network in **Fig. 5.15c**. If we now convert the combination of the 8-V source and 4-kΩ resistor into a 2-mA source in parallel with the 4-kΩ resistor and combine the resulting current source with the other 2-mA source, we arrive at the circuit shown in **Fig. 5.15d**. At this point, we can simply apply current division to the two parallel resistance paths and obtain

$$I_o = (4 \times 10^{-3})\left(\frac{4\text{k}}{4\text{k} + 4\text{k} + 8\text{k}}\right) = 1 \text{ mA}$$

and hence,

$$V_o = (1 \times 10^{-3})(8\text{k}) = 8 \text{ V}$$

The reader is encouraged to consider the ramifications of working this problem using any of the other techniques we have presented.

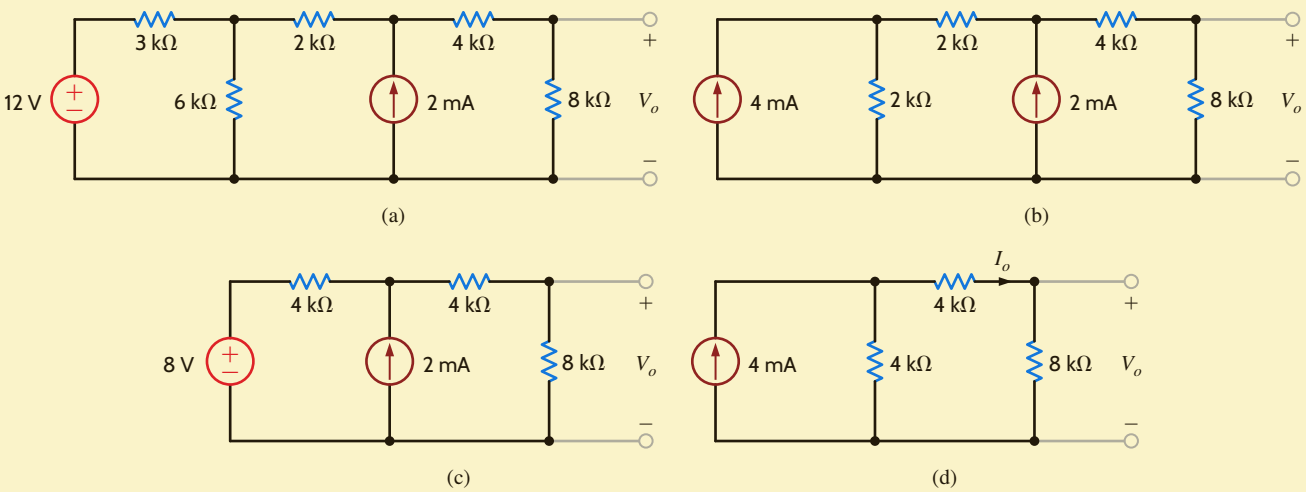

Figure 5.15

Circuits used in Example 5.13.

Note that this systematic, sometimes tedious, transformation allows us to reduce the network methodically to a simpler equivalent form with respect to some other circuit element. However, we should also realize that this technique is worthless for circuits of the form shown in Fig. 5.4. Furthermore, although applicable to networks containing dependent sources, it is not as useful as other techniques, and care must be taken not to transform the part of the circuit that contains the control variable.

LEARNING ASSESSMENTS

E5.14 Find V_o in the circuit in Fig. E5.3 using source exchange.

ANSWER:
$V_o = \frac{4}{3}$ V.

E5.15 Find the I_o in Fig. E5.15 using source transformations.

ANSWER:
$I_o = -1.94$ mA.

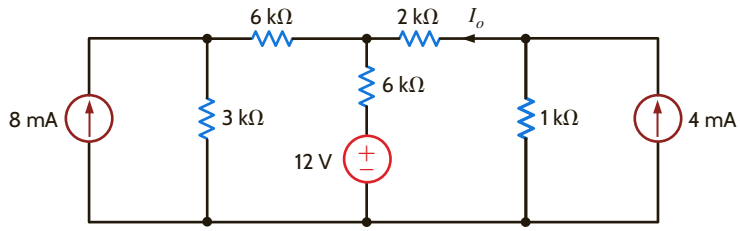

Figure E5.15

At this point, let us pause for a moment and reflect on what we have learned; that is, let us compare the use of node or loop analysis with that of the theorems discussed in this chapter. When we examine a network for analysis, one of the first things we should do is count the number of nodes and loops. Next we consider the number of sources. For example, are there a number of voltage sources or current sources present in the network? All these data, together with the information that we expect to glean from the network, give a basis for selecting the simplest approach. With the current level of computational power available to us, we can solve the node or loop equations that define the network in a flash.

With regard to the theorems, we have found that in some cases the theorems do not necessarily simplify the problem and a straightforward attack using node or loop analysis is as good an approach as any. This is a valid point, provided that we are simply looking for some particular voltage or current. However, the real value of the theorems is the insight and understanding that they provide about the physical nature of the network. For example, superposition tells us what each source contributes to the quantity under investigation. However, a computer solution of the node or loop equations does not tell us the effect of changing certain parameter values in the circuit. It does not help us understand the concept of loading a network or the ramifications of interconnecting networks or the idea of matching a network for maximum power transfer. The theorems help us to understand the effect of using a transducer at the input of an amplifier with a given input resistance. They help us explain the effect of a load, such as a speaker, at the output of an amplifier. We derive none of this information from a node or loop analysis. In fact, as a simple example, suppose that a network at a specific pair of terminals has a Thévenin equivalent circuit consisting of a voltage source in series with a 2-kΩ resistor. If we connect a 2-Ω resistor to the network at these terminals, the voltage across the 2-Ω resistor will be essentially nothing. This result is fairly obvious using the Thévenin theorem approach; however, a node or loop analysis gives us no clue as to why we have obtained this result.

We have studied networks containing only dependent sources. This is a very important topic because all electronic devices, such as transistors, are modeled in this fashion. Motors in power systems are also modeled in this way. We use these amplification devices for many different purposes, such as speed control for automobiles.

In addition, it is interesting to note that when we employ source transformation as we did in Example 5.13, we are simply converting back and forth between a Thévenin equivalent circuit and a Norton equivalent circuit.

Finally, we have a powerful tool at our disposal that can be used to provide additional insight and understanding for both circuit analysis and design. That tool is Microsoft Excel, and it permits us to study the effects, on a network, of varying specific parameters. The following example will illustrate the simplicity of this approach.

EXAMPLE 5.14

We wish to use Microsoft Excel to plot the Thévenin equivalent parameters V_{oc} and R_{Th} for the circuit in Fig. 5.16 over the R_x range 0 to 10 kΩ.

Figure 5.16
Circuit used in Example 5.14.

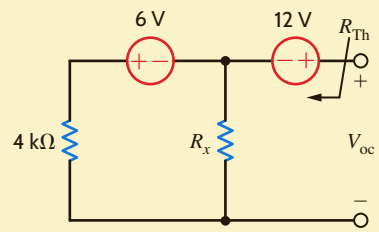

SOLUTION

The Thévenin resistance is easily found by replacing the voltage sources with short circuits. The result is

$$R_{Th} = 4//R_x = \frac{4R_x}{4 + R_x} \tag{5.7}$$

where R_x and R_{Th} are in kΩ. Superposition can be used effectively to find V_{oc}. If the 12-V source is replaced by a short circuit

$$V_{oc_1} = -6\left[\frac{R_x}{R_x + 4}\right]$$

Applying this same procedure for the 6-V source yields

$$V_{oc_2} = 12$$

and the total open-circuit voltage is

$$V_{oc} = 12 - 6\left[\frac{R_x}{R_x + 4}\right] \tag{5.8}$$

In Excel we wish to (1) vary R_x between 0 and 10 kΩ, (2) calculate R_{Th} and V_{oc} at each R_x value, and (3) plot V_{oc} and R_{Th} versus R_x. We begin by opening Excel and entering column headings as shown in Fig. 5.17a. Next, we enter a zero in the first cell of the R_x column at column-row location A4. To automatically fill the column with values, go to the Edit menu and select Fill/Series to open the window shown in Fig. 5.17b, which has already been edited appropriately for 101 data points. The result is a series of R_x values from 0 to 10 kΩ in 100 Ω steps. To enter Eq. (5.8), go to location B4 (right under the V_{oc} heading). Enter the following text and do not forget the equal sign:

```
=12-6*A4/(A4+4)
```

This is Eq. (5.8) with R_x replaced by the first value for R_x, which is at column-row location A4. Similarly for R_{Th}, enter the following expression at C4.

```
=4*A4/(A4+4)
```

To replicate the expression in cell B4 for all R_x values, select cell B4, grab the lower right corner of the cell, hold and drag down to cell B104, and release. Repeat for R_{Th} by replicating cell C4.

To plot the data, first drag the cursor across all cells between A4 and C104. Next, from the Insert menu, select Chart. We recommend strongly that you choose the XY (Scatter) chart type. Excel will take you step by step through the basic formatting of your chart, which, after some manipulations, might look similar to the chart in Fig. 5.17c.

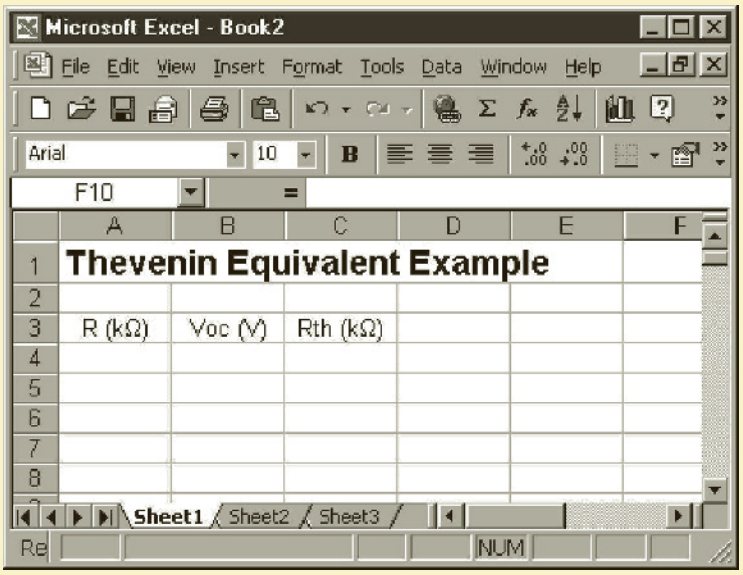

(a)

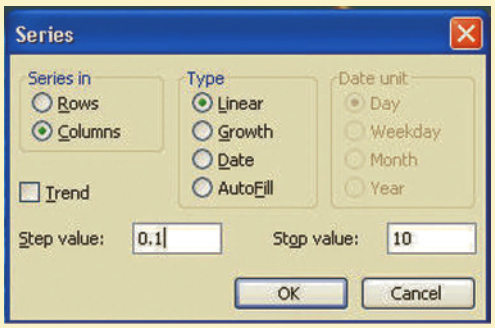

(b)

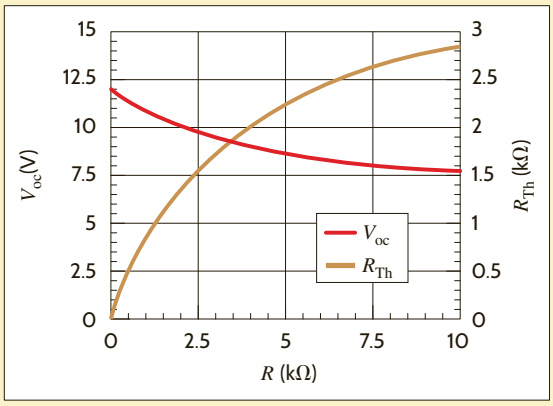

(c)

Figure 5.17

(a) The Excel spreadsheet for Example 5.14 showing the desired column headings. (b) The Fill/Series window edited for varying R_x and (c) the final plot of V_{oc} and R_{Th}.

5.4 Maximum Power Transfer

As we begin our discussion of maximum power transfer, it is instructive to examine what is known as a *load line*. This graphical technique is typically employed in (nonlinear) electronic circuits, and used to determine the operating point of the network. Consider, for example, the network in **Fig. 5.18a**. The load line is used to represent the relationship between voltage and current in the linear portion of the circuit, represented in this case by the 12-V source and 2-kΩ resistor. This line is shown in **Fig. 5.18b** and defined by the two points along the axes. The load, which may be linear or nonlinear, has a characteristic curve that defines its voltage/current relationship. If the load is a 4-kΩ resistor, as illustrated in **Fig. 5.18c**, its characteristic curve will appear as shown in Fig. 5.18b. The operating point is defined as the point

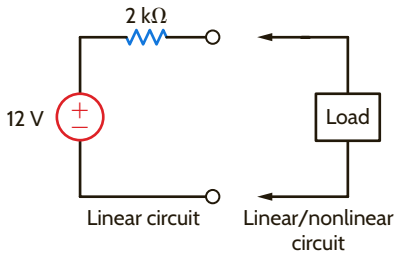

(a)

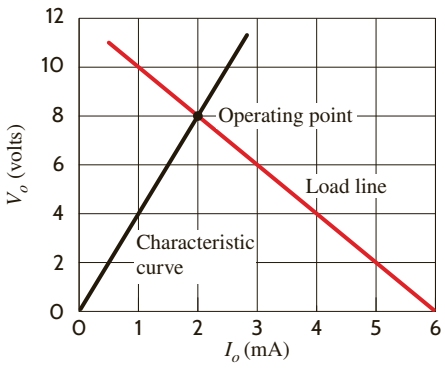

(b)

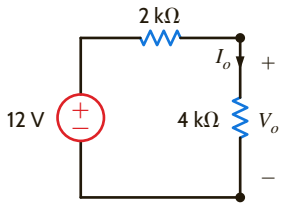

(c)

Figure 5.18

Load line analysis.

at which the characteristic curve intersects the load line, because at this point both the voltage and current parameters for each circuit match. Thus, in this example, the operating point is at $V_o = 8$ V and $I_o = 2$ mA. In nonlinear circuits, such as when the load is a diode, the diode's characteristic curve is not a straight line, and this technique provides a useful mechanism for graphically determining the operating point of the circuit.

There are situations in circuit design when we want to select a load so that the maximum power can be transferred to it. We can determine the maximum power that a circuit can supply and the manner in which to adjust the load to effect maximum power transfer by employing Thévenin's theorem.

In circuit analysis, we are sometimes interested in determining the maximum power that can be delivered to a load. By employing Thévenin's theorem, we can determine the maximum power that a circuit can supply and the manner in which to adjust the load to effect maximum power transfer.

Suppose that we are given the circuit shown in **Fig. 5.19**. The power that is delivered to the load is given by the expression

$$P_{\text{load}} = i^2 R_L = \left(\frac{v}{R + R_L}\right)^2 R_L$$

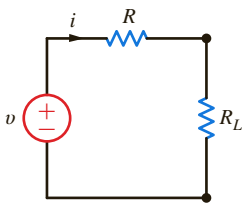

Figure 5.19
Equivalent circuit for examining maximum power transfer.

We want to determine the value of R_L that maximizes this quantity. Hence, we differentiate this expression with respect to R_L and equate the derivative to zero:

$$\frac{dP_{\text{load}}}{dR_L} = \frac{(R + R_L)^2 v^2 - 2v^2 R_L (R + R_L)}{(R + R_L)^4} = 0$$

which yields

$$R_L = R$$

In other words, maximum power transfer takes place when the load resistance $R_L = R$. Although this is a very important result, we have derived it using the simple network in Fig. 5.19. However, we should recall that v and R in Fig. 5.19 could represent the Thévenin equivalent circuit for any linear network.

EXAMPLE 5.15

Let us find the value of R_L for maximum power transfer in the network in **Fig. 5.20a** and the maximum power that can be transferred to this load.

SOLUTION

To begin, we derive the Thévenin equivalent circuit for the network exclusive of the load. V_{oc} can be calculated from the circuit in **Fig. 5.20b**. The mesh equations for the network are

$$I_1 = 2 \times 10^{-3}$$
$$3\text{k}(I_2 - I_1) + 6\text{k}I_2 + 3 = 0$$

Solving these equations yields $I_2 = 1/3$ mA and, hence,

$$V_{oc} = 4\text{k}I_1 + 6\text{k}I_2$$
$$= 10 \text{ V}$$

R_{Th}, shown in **Fig. 5.20c**, is 6 kΩ; therefore, $R_L = R_{Th} = 6$ kΩ for maximum power transfer. The maximum power transferred to the load in **Fig. 5.20d** is

$$P_L = \left(\frac{10}{12\text{k}}\right)^2 (6\text{k}) = \frac{25}{6} \text{ mW}$$

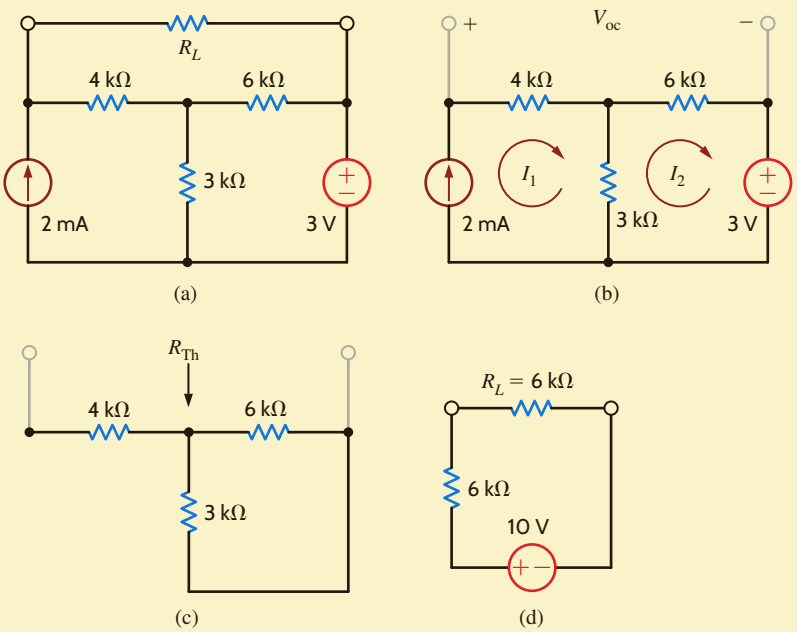

Figure 5.20
Circuits used in Example 5.15.

EXAMPLE 5.16

Let us find R_L for maximum power transfer and the maximum power transferred to this load in the circuit in **Fig. 5.21a**.

SOLUTION

We wish to reduce the network to the form shown in Fig. 5.19. We could form the Thévenin equivalent circuit by breaking the network at the load. However, close examination of the network indicates that our analysis will be simpler if we break the network to the left of the 4-kΩ resistor. When we do this, however, we must realize that for maximum power transfer $R_L = R_{Th} + 4$ kΩ. V_{oc} can be calculated from the network in **Fig. 5.21b**. Forming a supernode around the dependent source and its connecting nodes, the KCL equation for this supernode is

$$\frac{V_{oc} - 2000I'_x}{1\text{k} + 3\text{k}} + (-4 \times 10^{-3}) + \frac{V_{oc}}{2\text{k}} = 0$$

where

$$I'_x = \frac{V_{oc}}{2\text{k}}$$

These equations yield $V_{oc} = 8$ V. The short-circuit current can be found from the network in **Fig. 5.21c**. It is here that we find the advantage of breaking the network to the left of the 4-kΩ resistor. The short circuit shorts the 2-kΩ resistor and, therefore, $I''_x = 0$. Hence, the circuit is reduced to that in **Fig. 5.21d**, where clearly $I_{sc} = 4$ mA. Then

$$R_{Th} = \frac{V_{oc}}{I_{sc}} = 2 \text{ k}\Omega$$

Connecting the Thévenin equivalent to the remainder of the original circuit produces the network in **Fig. 5.21e**. For maximum power transfer $R_L = R_{Th} + 4$ kΩ $= 6$ kΩ, and the maximum power transferred is

$$P_L = \left(\frac{8}{12\text{k}}\right)^2 (6\text{k}) = \frac{8}{3} \text{ mW}$$

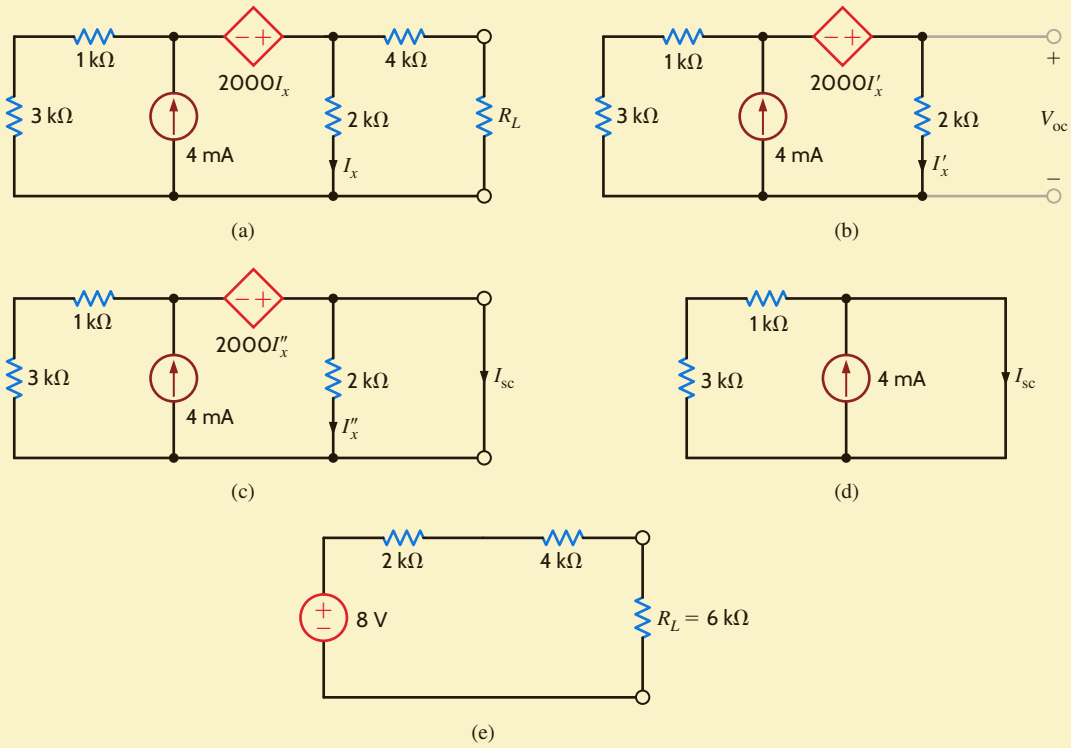

Figure 5.21

Circuits used in Example 5.16.

LEARNING ASSESSMENTS

E5.16 Given the circuit in Fig. E5.16, find R_L for maximum power transfer and the maximum power transferred.

ANSWER:
$R_L = 6$ kΩ;
$P_L = \frac{2}{3}$ mW.

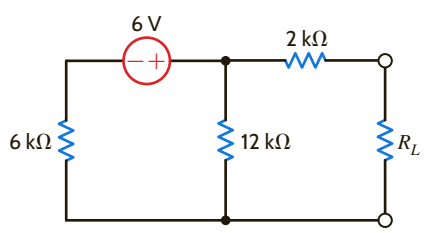

Figure E5.16

E5.17 Find R_L for maximum transfer and the maximum power transferred to R_L in Fig. E5.17.

ANSWER:
14/9 kΩ;
2/7 mW.

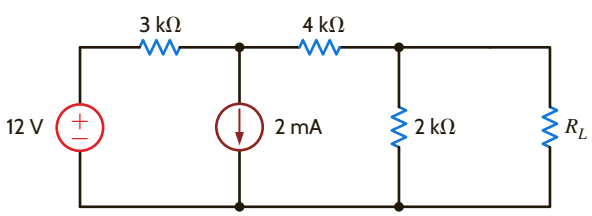

Figure E5.17

E5.18 Find R_L for maximum transfer and the maximum power transferred to R_L in Fig. E5.18.

ANSWER:
24/13 kΩ; 27/26 mW.

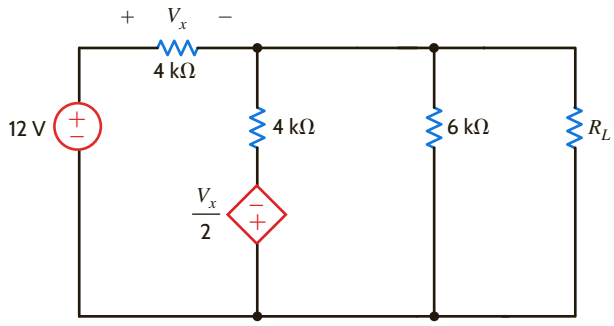

Figure E5.18

EXAMPLE 5.17

Given the network in Fig. 5.22 with $V_{in} = 5$ V and $R_1 = 2\ \Omega$, let us graphically examine a variety of aspects of maximum power transfer by plotting the parameters V_{out}, I, P_{out}, P_{in}, and the efficiency $= P_{out}/P_{in}$ as a function of the resistor ratio R_2/R_1.

SOLUTION

The parameters to be plotted can be determined by simple circuit analysis techniques. By voltage division

$$V_{out} = \left[\frac{R_2}{R_1 + R_2}\right]V_{in} = \left[\frac{R_2}{2 + R_2}\right](5)$$

From Ohm's law

$$I = \frac{V_{in}}{R_1 + R_2} = \frac{5}{2 + R_2}$$

The input and output powers are

$$P_{in} = IV_{in} = \frac{V_{in}^2}{R_1 + R_2} = \frac{25}{2 + R_2} \qquad P_{out} = IV_{out} = R_2\left[\frac{V_{in}}{R_1 + R_2}\right]^2 = R_2\left[\frac{5}{2 + R_2}\right]^2$$

Finally, the efficiency is

$$\text{efficiency} = \frac{P_{out}}{P_{in}} = \frac{R_2}{R_1 + R_2} = \frac{R_2}{2 + R_2}$$

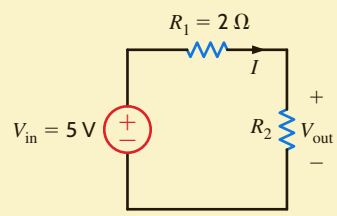

Figure 5.22
Circuit used in maximum power transfer analysis.

The resulting plots of the various parameters are shown in Fig. 5.23 for R_2 ranging from $0.1R_1$ to $10R_1$. Note that as R_2 increases, V_{out} increases toward V_{in} (5 V) as dictated by voltage division. Also, the current decreases in accordance with Ohm's law. Thus, for small values of R_2, V_{out} is small, and when R_2 is large, I is small. As a result, the output power (the product of these two parameters) has a maximum at $R_2/R_1 = 1$ as predicted by maximum power transfer theory.

Maximum power does not correspond to maximum output voltage, current, or efficiency. In fact, at maximum power transfer, the efficiency is always 0.5, or 50%. If you are an electric utility supplying energy to your customers, do you want to operate at maximum power transfer? The answer to this question is an obvious "No" because the efficiency is only 50%. The utility would only be able to charge its customers for one-half of the energy produced. It is not uncommon for a large electric utility to spend billions of dollars every year to produce electricity. The electric utility is more interested in operating at maximum efficiency.

Figure 5.23

Maximum power transfer parameter plots for the network in Fig. 5.22. (The units for voltage, current, and power have volts, amperes, and watts, respectively.)

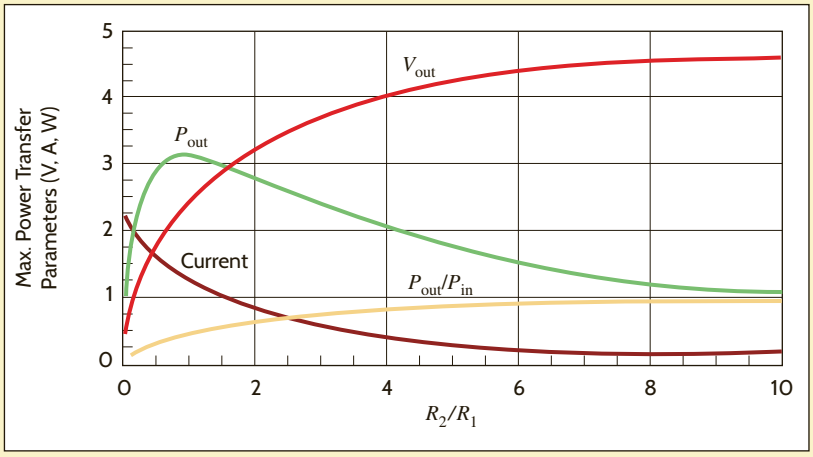

SUMMARY

- Linearity: This property requires both additivity and homogeneity. Using this property, we can determine the voltage or current somewhere in a network by assuming a specific value for the variable and then determining what source value is required to produce it. The ratio of the specified source value to that computed from the assumed value of the variable, together with the assumed value of the variable, can be used to obtain a solution.
- In a linear network containing multiple independent sources, the principle of superposition allows us to compute any current or voltage in the network as the algebraic sum of the individual contributions of each source acting alone.
- Superposition is a linear property and does not apply to nonlinear functions such as power.
- Using Thévenin's theorem, we can replace some portion of a network at a pair of terminals with a voltage source V_{oc} in series with a resistor R_{Th}. V_{oc} is the open-circuit voltage at the terminals, and R_{Th} is the Thévenin equivalent resistance obtained by looking into the terminals with all independent sources made zero.
- Using Norton's theorem, we can replace some portion of a network at a pair of terminals with a current source I_{sc} in parallel with a resistor R_{Th}. I_{sc} is the short-circuit current at the terminals, and R_{Th} is the Thévenin equivalent resistance.
- Source transformation permits us to replace a voltage source V in series with a resistance R by a current source $I = V/R$ in parallel with the resistance R. The reverse is also true. This is an interchange relationship between Thévenin and Norton equivalent circuits.
- Maximum power transfer can be achieved by selecting the load R_L to be equal to R_{Th} found by looking into the network from the load terminals.

PROBLEMS

5.1 Find I_o in the network in Fig. P5.1 using linearity and the assumption that $I_o = 1$ mA.

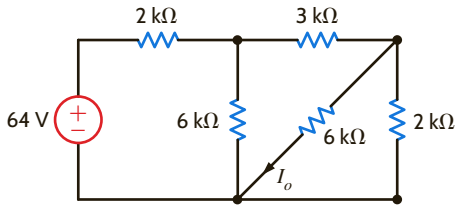

Figure P5.1

5.2 Find I_o in the network in Fig. P5.2 using linearity and the assumption that $I_o = 1$ mA.

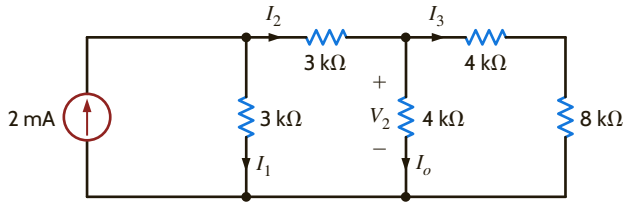

Figure P5.2

5.3 Find I_o in the network in Fig. P5.3 using linearity and the assumption that $I_o = 1$ mA.

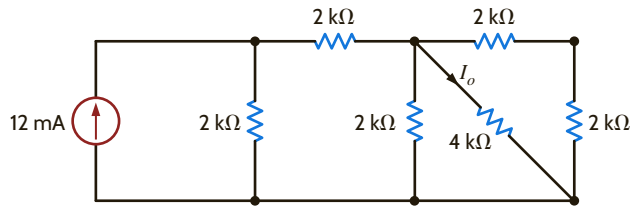

Figure P5.3

5.4 Find V_o in the network in Fig. P5.4 using linearity and the assumption that $V_o = 1$ V.

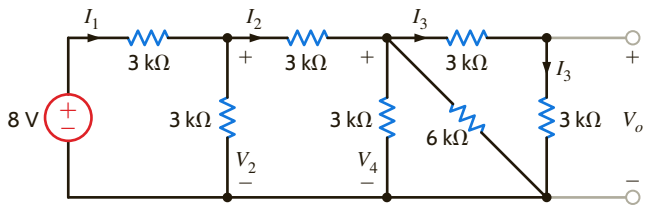

Figure P5.4

5.5 Find I_o in the circuit in Fig. P5.5 using linearity and the assumption that $I_o = 1$ mA.

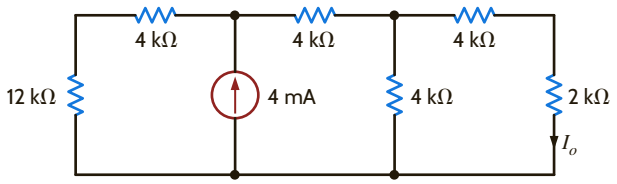

Figure P5.5

5.6 Find I_o in the network in Fig. P5.6 using superposition.

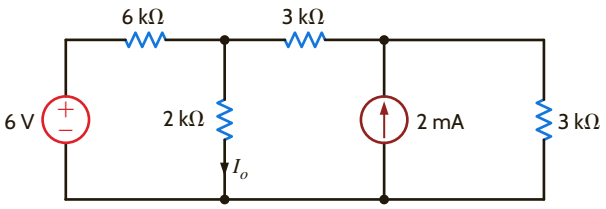

Figure P5.6

5.7 Find I_o in the circuit in Fig. P5.7 using superposition.

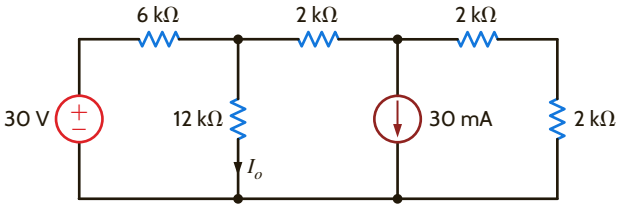

Figure P5.7

5.8 Find V_o in the network in Fig. P5.8 using superposition.

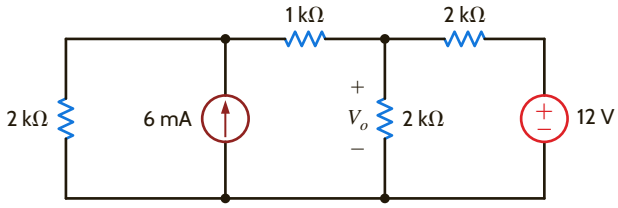

Figure P5.8

5.9 Find V_o in the network in Fig. P5.9 using superposition.

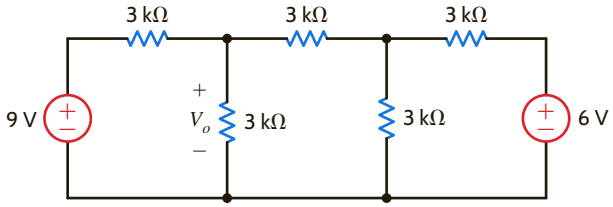

Figure P5.9

5.10 In the network in Fig. P5.10, find I_o using superposition.

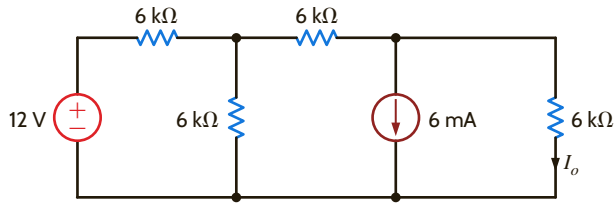

Figure P5.10

5.11 Find I_o in the network in Fig. P5.11 using superposition.

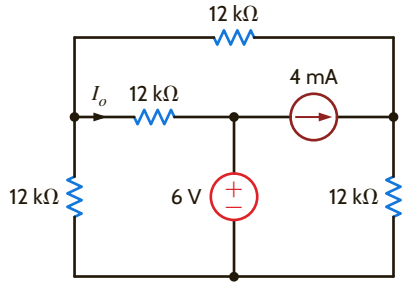

Figure P5.11

5.12 Find I_o in the network in Fig. P5.12 using superposition.

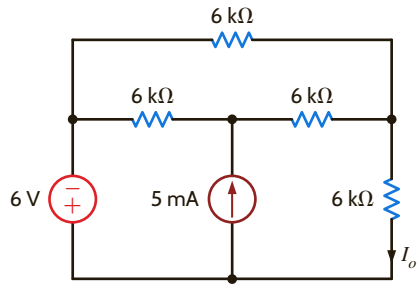

Figure P5.12

5.13 Find I_A in the network in Fig. P5.13 using superposition.

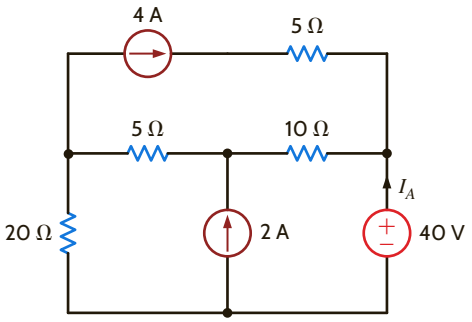

Figure P5.13

5.14 Using superposition, find I_A in the circuit in Fig. P5.14.

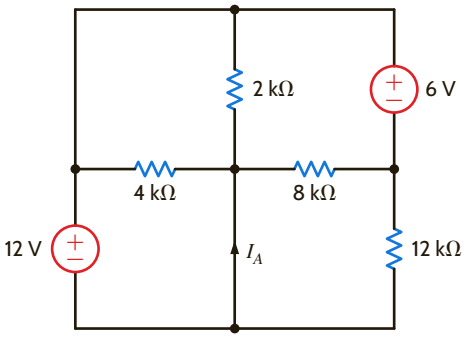

Figure P5.14

5.15 Find I_A in the network in Fig. P5.15 using superposition.

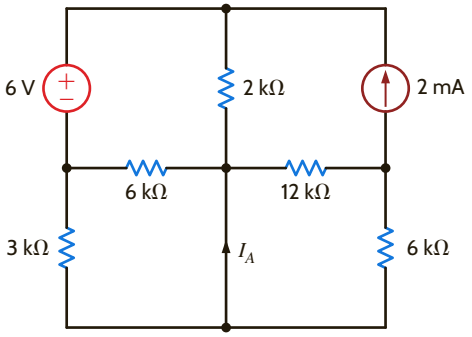

Figure P5.15

5.16 Use superposition to find V_o in the network in Fig. P5.16.

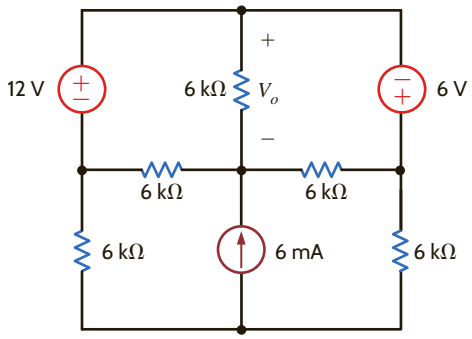

Figure P5.16

5.17 Use superposition to find I_o in the circuit in Fig. P5.17.

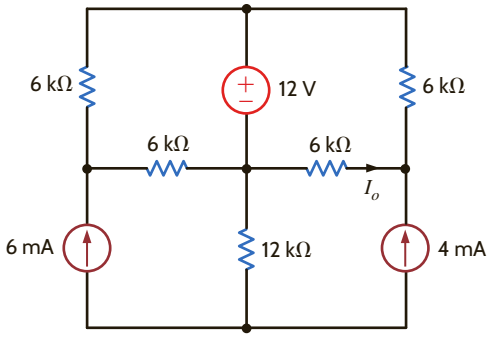

Figure P5.17

5.18 Use superposition to find I_o in the network in Fig. P5.18.

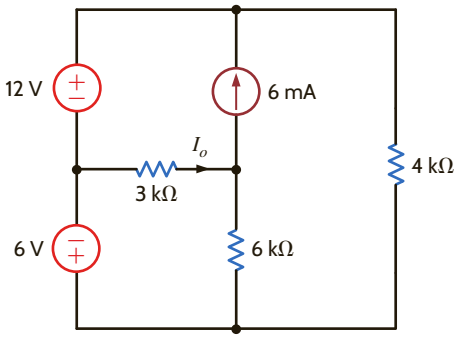

Figure P5.18

5.19 Use superposition to find V_o in the circuit in Fig. P5.19.

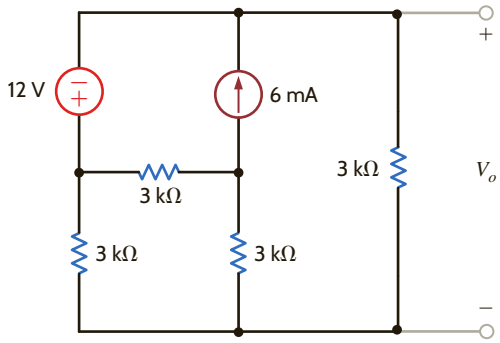

Figure P5.19

5.20 Find V_o in the circuit in Fig. P5.20 using superposition.

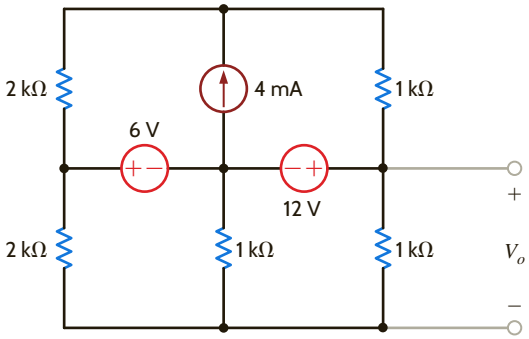

Figure P5.20

5.21 Find I_o in the circuit in Fig. P5.21 using superposition.

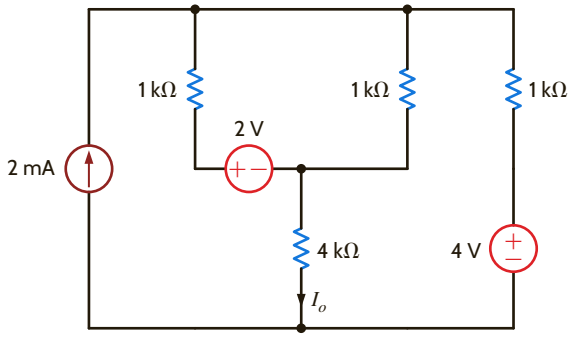

Figure P5.21

5.22 Use superposition to find I_o in the circuit in Fig. P5.22.

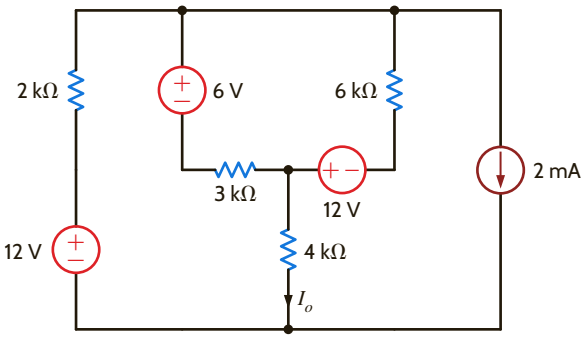

Figure P5.22

5.23 Use superposition to find I_o in the network in Fig. P5.23.

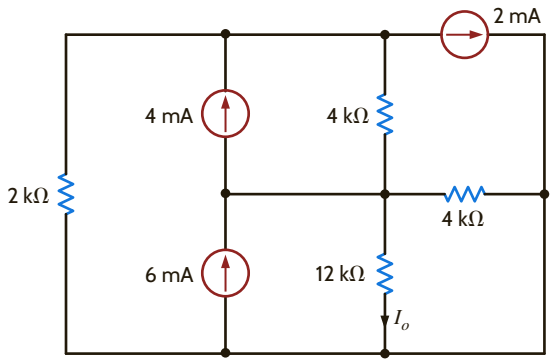

Figure P5.23

5.24 Use superposition to find I_o in the circuit in Fig. P5.24.

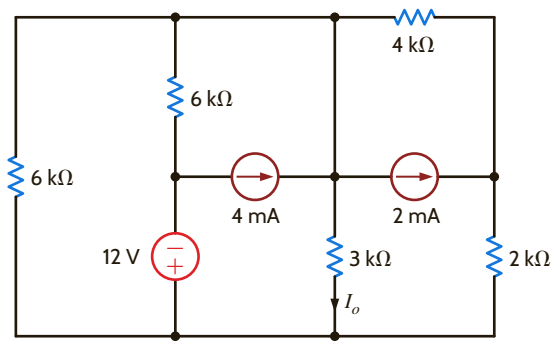

Figure P5.24

5.25 Use Thévenin's theorem to find V_o in the network in Fig. P5.25.

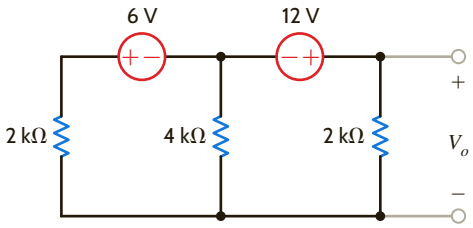

Figure P5.25

5.26 Use Thévenin's theorem to find I_o in the network in Fig. P5.26.

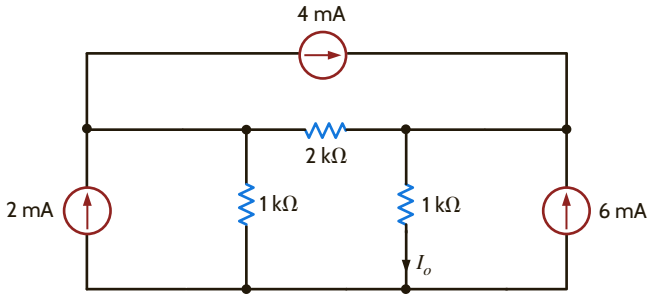

Figure P5.26

5.27 Use Thévenin's theorem to find V_o in the network in Fig. P5.27.

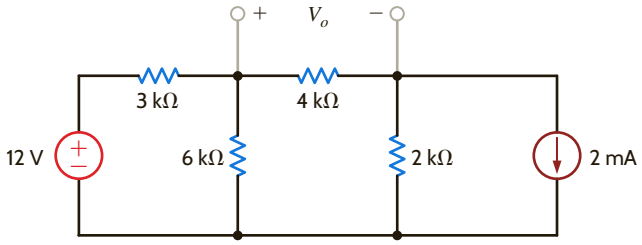

Figure P5.27

5.28 Find I_o in the network in Fig. P5.28 using Thévenin's theorem.

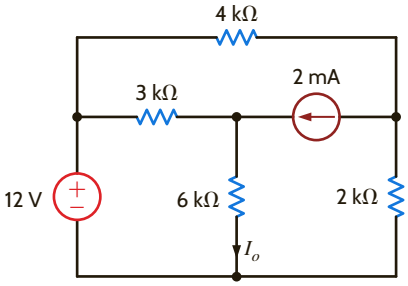

Figure P5.28

5.29 Find V_o in the circuit in Fig. P5.29 using Thévenin's theorem.

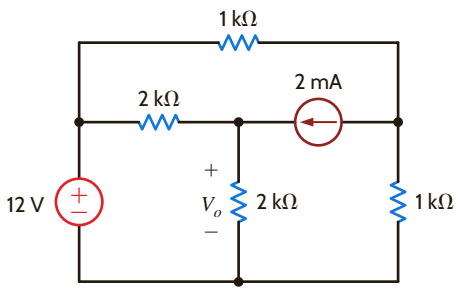

Figure P5.29

5.30 Use Thévenin's theorem to find I_o in the network in Fig. P5.30.

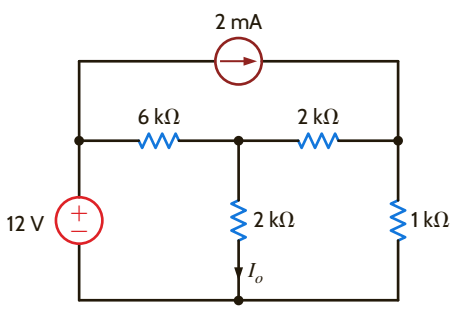

Figure P5.30

5.31 Find V_o in the network in Fig. P5.31 using Thévenin's theorem.

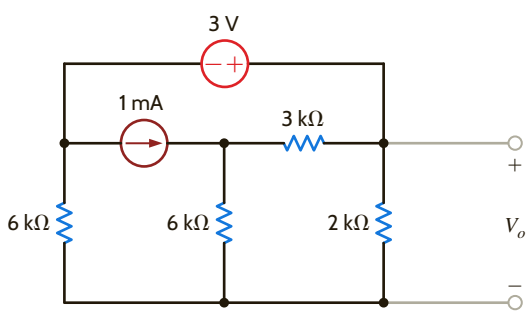

Figure P5.31

5.32 Find I_o in the circuit in Fig. P5.32 using Thévenin's theorem.

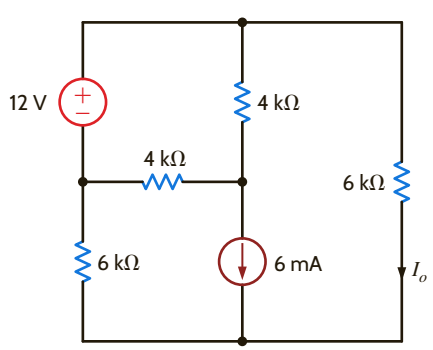

Figure P5.32

5.33 Find I_o in the network in Fig. P5.33 using Thévenin's theorem.

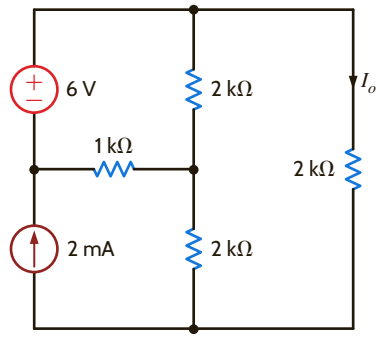

Figure P5.33

5.34 Find I_o in the network in Fig. P5.34 using Thévenin's theorem.

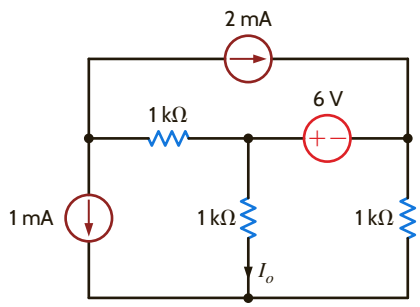

Figure P5.34

5.35 Find I_o in the circuit in Fig. P5.35 using Thévenin's theorem.

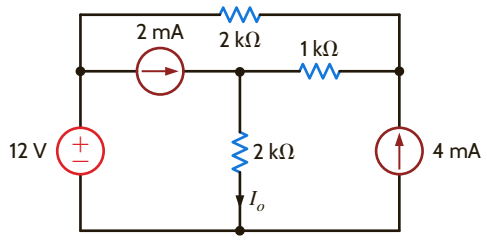

Figure P5.35

5.36 Find I_o in the network in Fig. P5.36 using Thévenin's theorem.

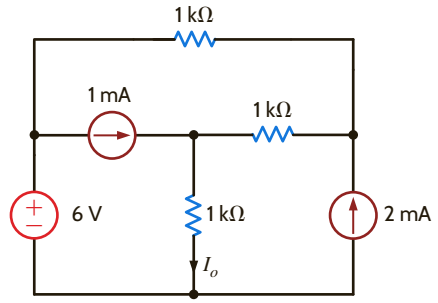

Figure P5.36

5.37 Using Thévenin's theorem, find I_A in the circuit in Fig. P5.37.

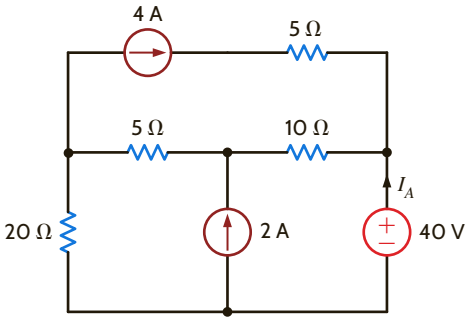

Figure P5.37

5.38 Find V_o in the network in Fig. P5.38 using Thévenin's theorem.

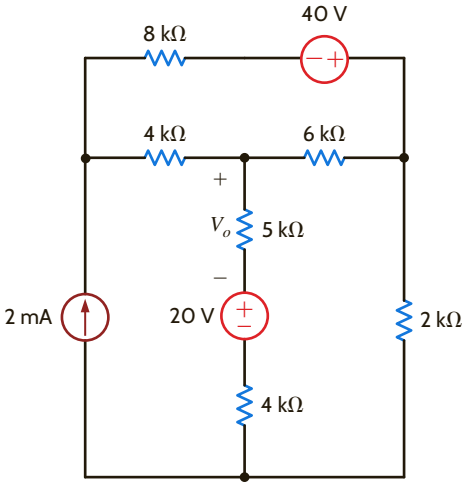

Figure P5.38

5.39 Find V_o in the circuit in Fig. P5.39 using Thévenin's theorem.

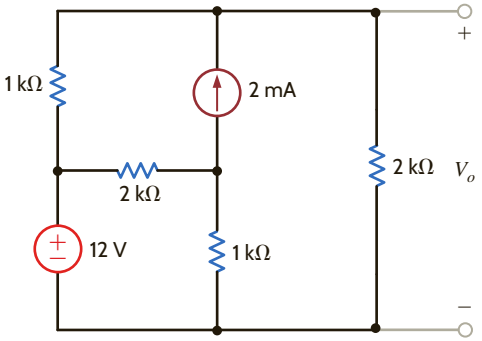

Figure P5.39

5.40 Find I_o in the circuit in Fig. P5.40 using Thévenin's theorem.

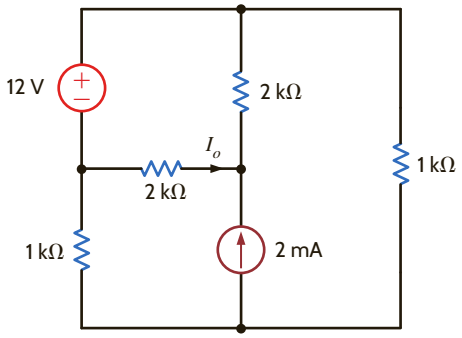

Figure P5.40

5.41 Find V_o in the network in Fig. P5.41 using Thévenin's theorem.

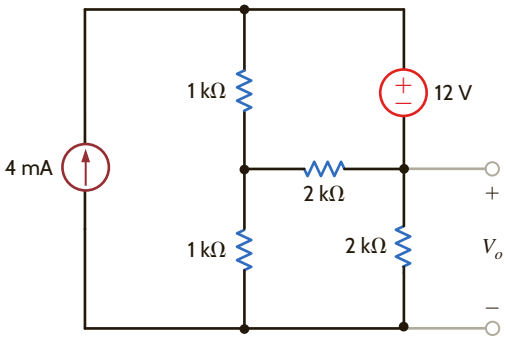

Figure P5.41

5.42 Find I_o in the network in Fig. P5.42 using Thévenin's theorem.

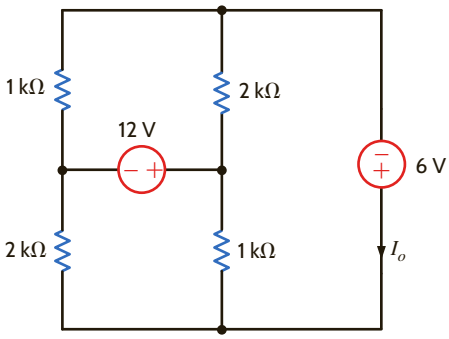

Figure P5.42

5.43 Find V_o in Fig. P5.43 using Thévenin's theorem.

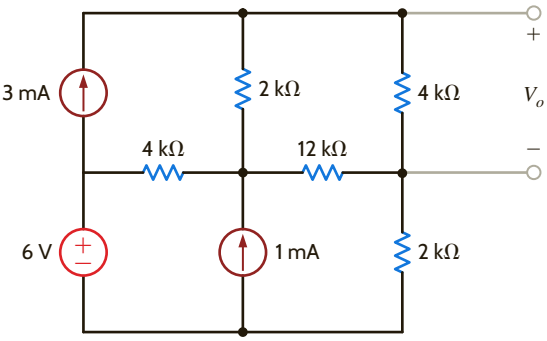

Figure P5.43

5.44 Use Thévenin's theorem to find V_o in the circuit in Fig. P5.44.

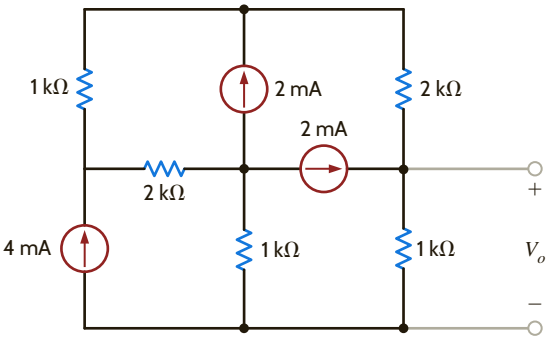

Figure P5.44

5.45 Use Thévenin's theorem to find I_o in Fig. P5.45.

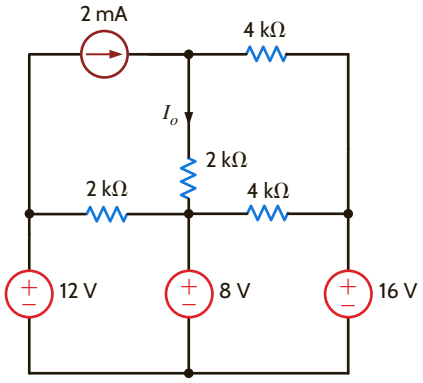

Figure P5.45

5.46 Find V_o in the network in Fig. P5.46 using Thévenin's theorem.

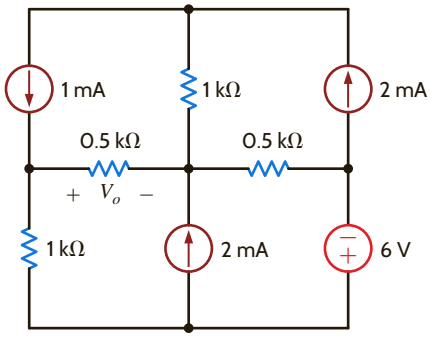

Figure P5.46

5.47 Use Thévenin's theorem to find I_o in the network in Fig. P5.47.

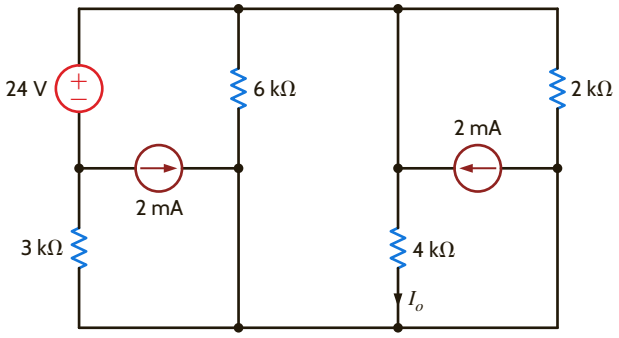

Figure P5.47

5.48 Use Thévenin's theorem to find I_o in the circuit in Fig. P5.48.

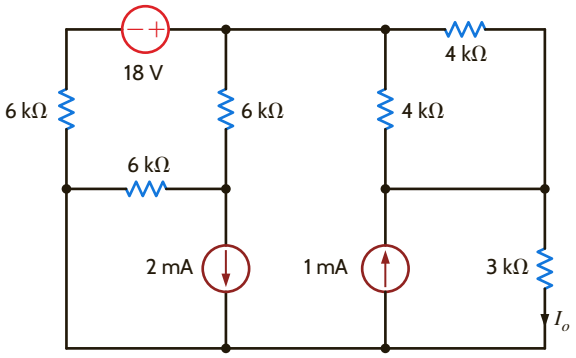

Figure P5.48

5.49 Given the linear circuit in Fig. P5.49, it is known that when a 2-kΩ load is connected to the terminals A–B, the load current is 10 mA. If a 10-kΩ load is connected to the terminals, the load current is 6 mA. Find the current in a 20-kΩ load.

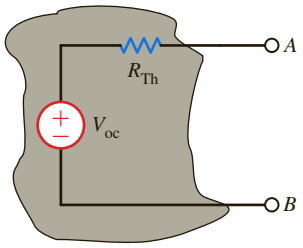

Figure P5.49

5.50 If an 8-kΩ load is connected to the terminals of the network in Fig. P5.50, V_{AB} = 16 Ω. If a 2-kΩ load is connected to the terminals, V_{AB} = 8 V. Find V_{AB} if a 20-kΩ load is connected to the terminals.

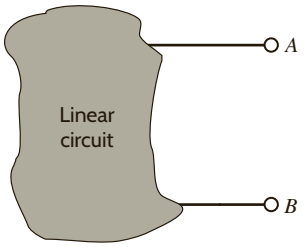

Figure P5.50

5.51 Use Norton's theorem to find I_o in the circuit in Fig. P5.51.

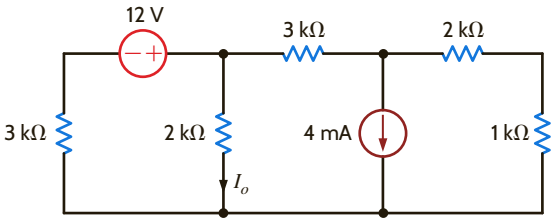

Figure P5.51

5.52 Find I_o in the network in Fig. P5.52 using Norton's theorem.

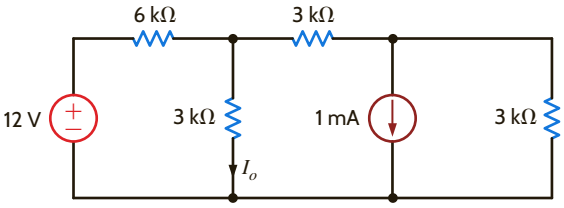

Figure P5.52

5.53 Use Norton's theorem to find I_o in the circuit in Fig. P5.53.

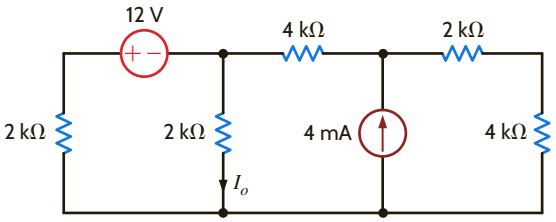

Figure P5.53

5.54 Use Norton's theorem to find V_o in the network in Fig. P5.54.

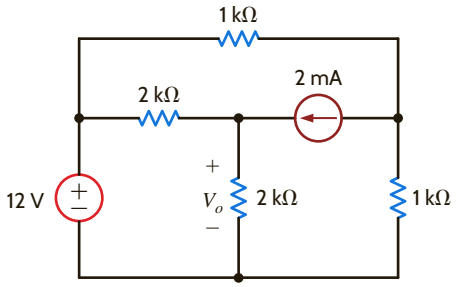

Figure P5.54

5.55 Find I_o in the network in Fig. P5.55 using Norton's theorem.

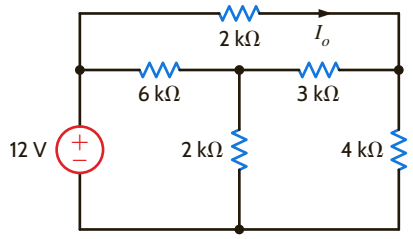

Figure P5.55

5.56 Use Norton's theorem to find V_o in the network in Fig. P5.56.

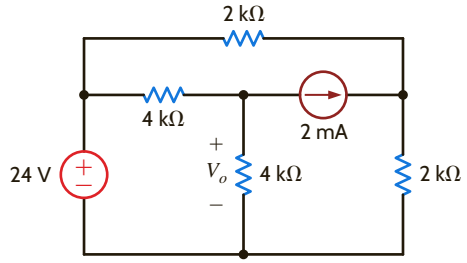

Figure P5.56

5.57 Find V_o in the network in Fig. P5.57 using Norton's theorem.

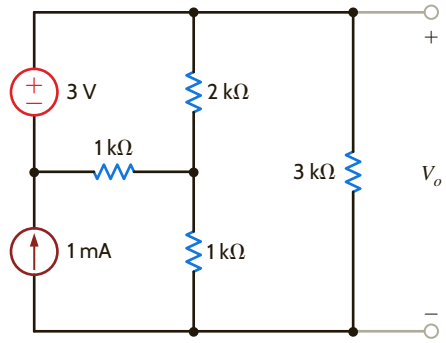

Figure P5.57

5.58 Use Norton's theorem to find I_o in the circuit in Fig. P5.58.

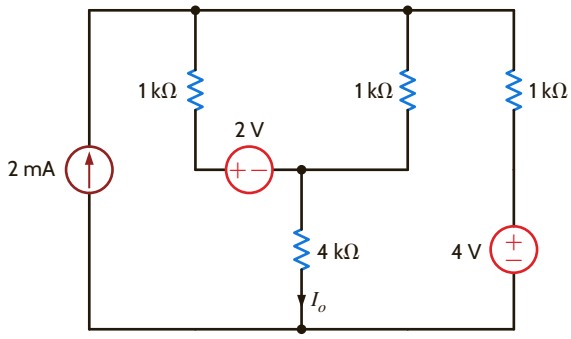

Figure P5.58

5.59 Find V_o in the circuit in Fig. P5.59 using Norton's theorem.

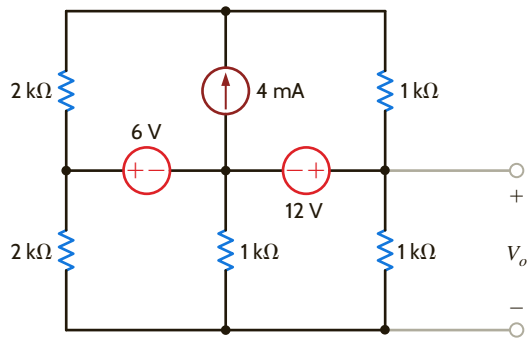

Figure P5.59

5.60 Use Norton's theorem to find I_o in the network in Fig. P5.60.

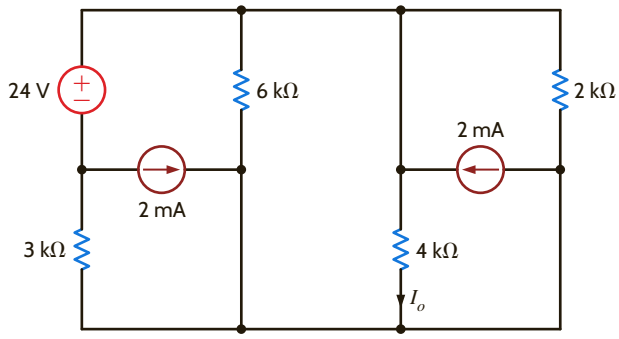

Figure P5.60

5.61 Use Norton's theorem to find I_o in the circuit in Fig. P5.61.

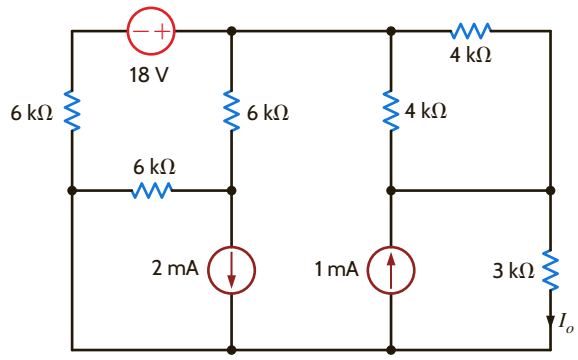

Figure P5.61

5.62 In the network in Fig. P5.62, find V_o using Thévenin's theorem.

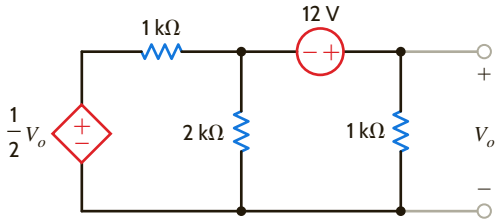

Figure P5.62

5.63 Use Thévenin's theorem to find I_o in the circuit in Fig. P5.63.

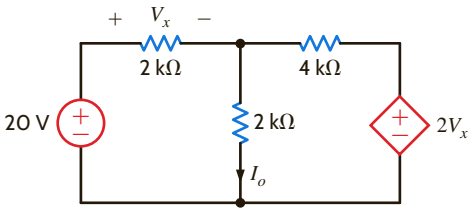

Figure P5.63

5.64 Find V_o in the network in Fig. P5.64 using Thévenin's theorem.

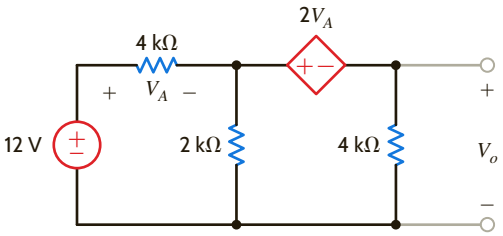

Figure P5.64

5.65 Use Thévenin's theorem to find V_o in the circuit in Fig. P5.65.

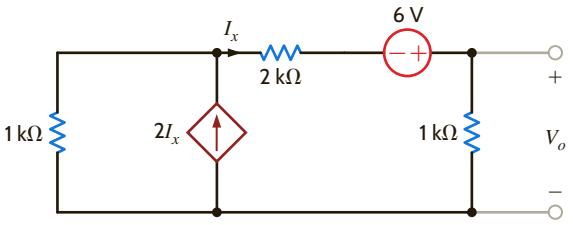

Figure P5.65

5.66 Find I_o in the circuit in Fig. P5.66 using Thévenin's theorem.

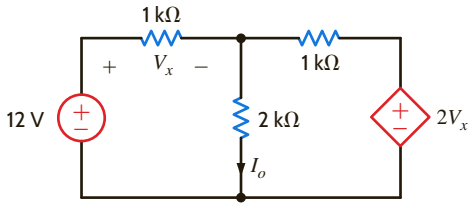

Figure P5.66

5.67 Use Thévenin's theorem to find I_o in the circuit in Fig. P5.67.

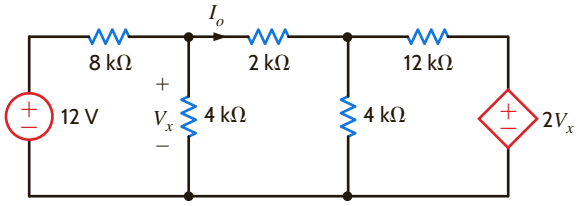

Figure P5.67

5.68 Use Thévenin's theorem to find V_o in the circuit in Fig. P5.68.

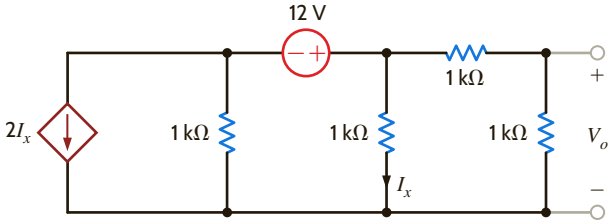

Figure P5.68

5.69 Find V_o in the network in Fig. P5.69 using Thévenin's theorem.

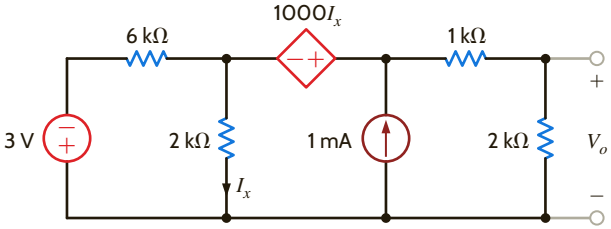

Figure P5.69

5.70 Use Norton's theorem to find V_o in the network in Fig. P5.70.

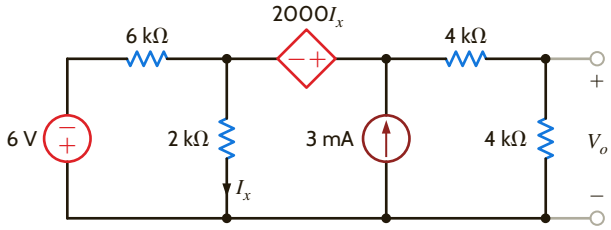

Figure P5.70

5.71 Find V_o in the circuit in Fig. P5.71 using Thévenin's theorem.

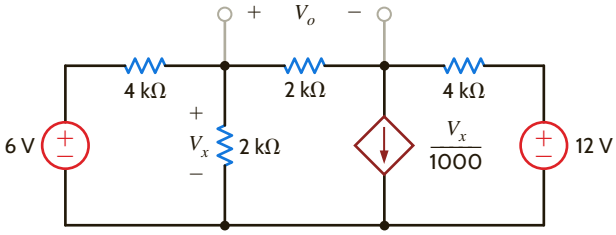

Figure P5.71

5.72 Find V_o in the network in Fig. P5.72 using Thévenin's theorem.

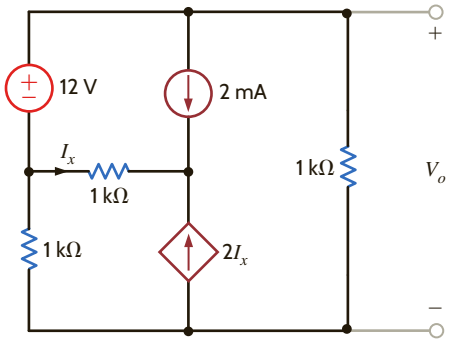

Figure P5.72

5.73 Find V_o in the network in Fig. P5.73 using Norton's theorem.

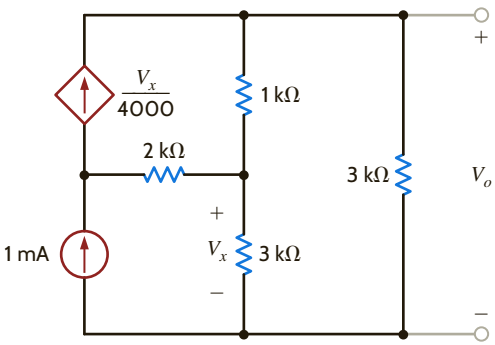

Figure P5.73

5.74 Use Thévenin's theorem to find the power supplied by the 2-V source in the circuit in Fig. P5.74.

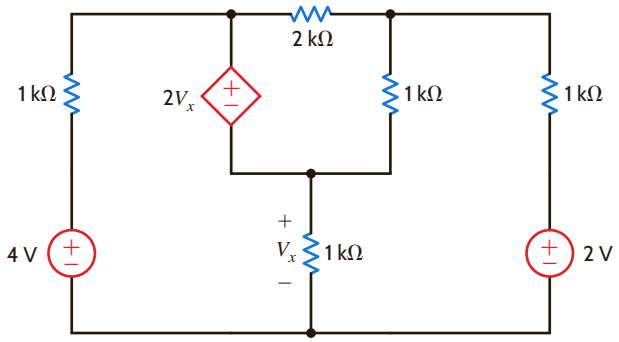

Figure P5.74

5.75 Find V_o in the circuit in Fig. P5.75 using Thévenin's theorem.

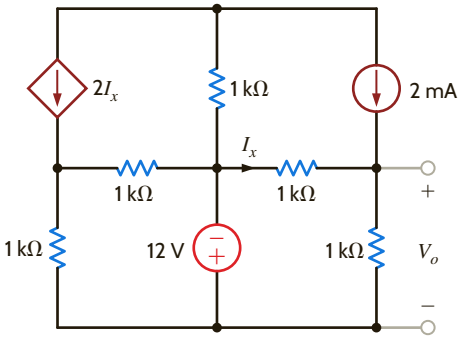

Figure P5.75

5.76 Find V_o in the network in Fig. P5.76 using Thévenin's theorem.

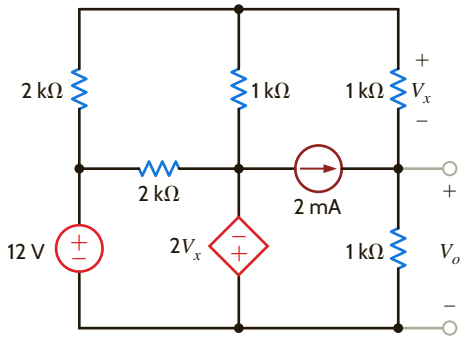

Figure P5.76

5.77 Find V_o in the network in Fig. P5.77 using Thévenin's theorem.

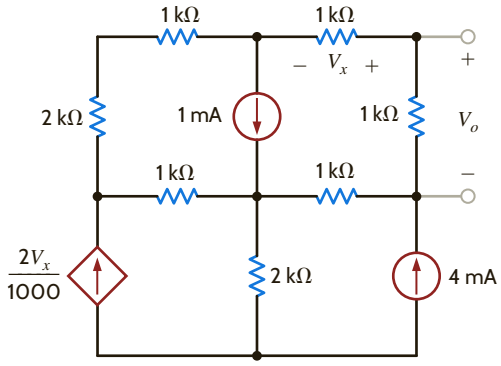

Figure P5.77

5.78 Use Thévenin's theorem to find I_2 in the circuit in Fig. P5.78.

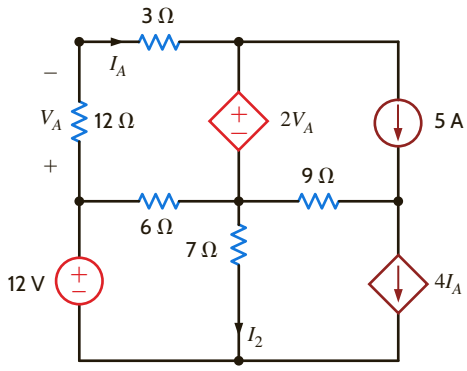

Figure P5.78

5.79 Use Thévenin's theorem to find V_o in the circuit in Fig. P5.79.

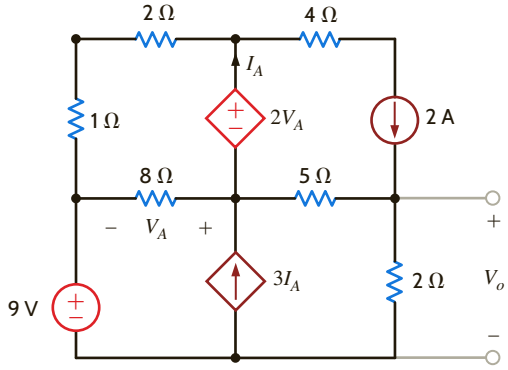

Figure P5.79

5.80 Use Thévenin's theorem to find V_o in the circuit in Fig. P5.80.

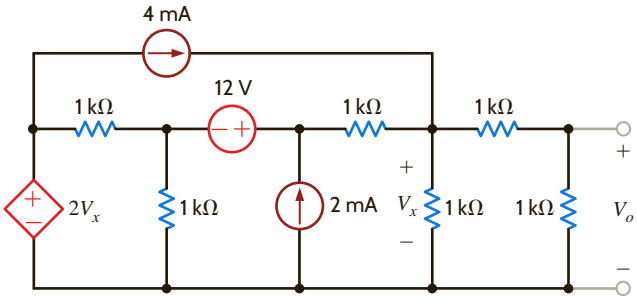

Figure P5.80

5.81 Use Thévenin's theorem to find I_o in the network in Fig. P5.81.

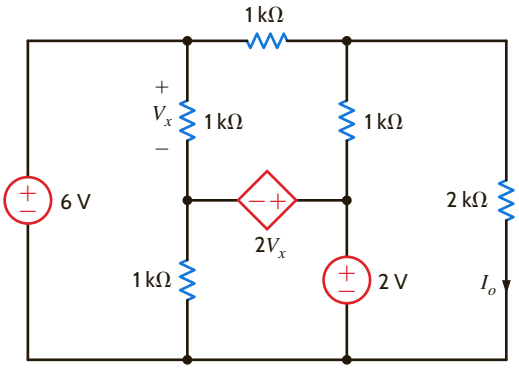

Figure P5.81

5.82 Use Thévenin's theorem to find V_o in the network in Fig. P5.82.

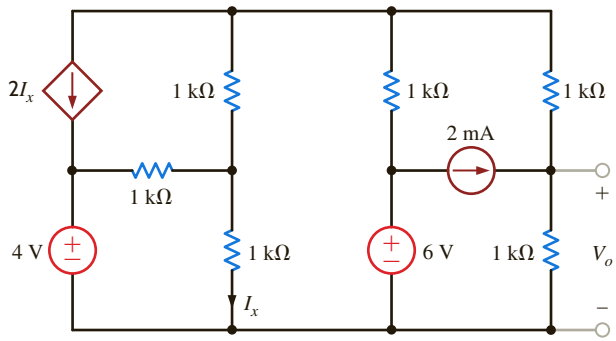

Figure P5.82

5.83 Find the Thévenin equivalent of the network in Fig. P5.83 at the terminals *A*–*B*.

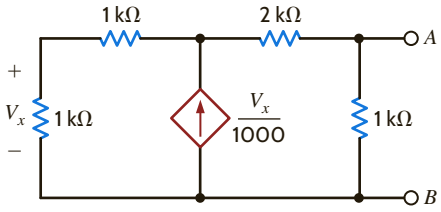

Figure P5.83

5.84 Find the Thévenin equivalent of the network in Fig. P5.84 at the terminals A–B.

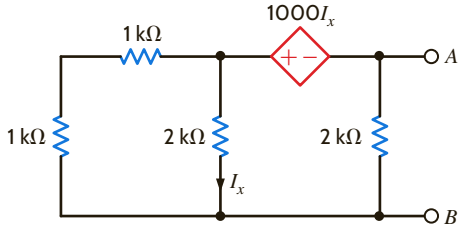

Figure P5.84

5.85 Find the Thévenin equivalent of the circuit in Fig. P5.85 at the terminals A–B.

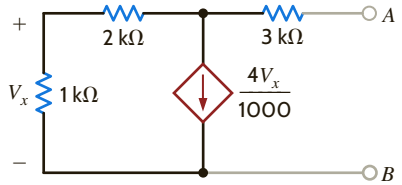

Figure P5.85

5.86 Find the Thévenin equivalent of the network in Fig. P5.86 at the terminals A–B using a 1-mA current source.

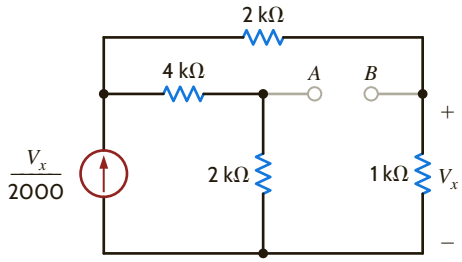

Figure P5.86

5.87 Find the Thévenin equivalent circuit of the network in Fig. P5.87 at terminals A–B.

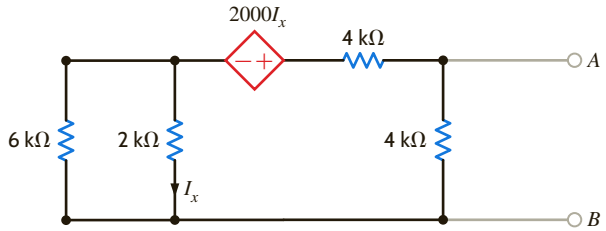

Figure P5.87

5.88 Find V_o in the network in Fig. P5.88 using source transformation.

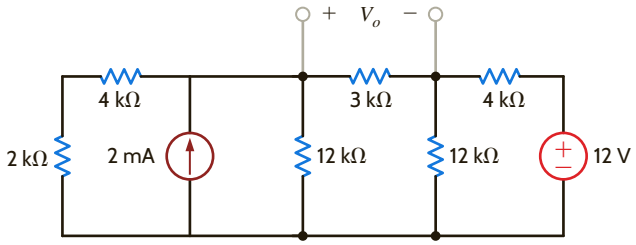

Figure P5.88

5.89 Find I_o in the network in Fig. P5.89 using source transformation.

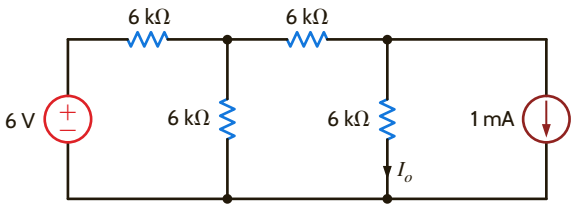

Figure P5.89

5.90 Use source transformation to find V_o in the network in Fig. P5.90.

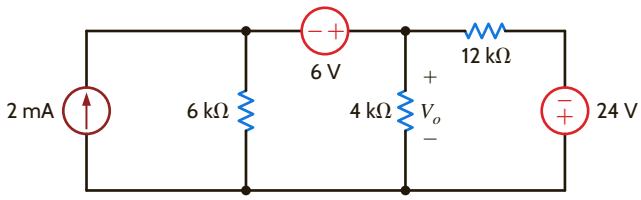

Figure P5.90

5.91 Find I_o in the network in Fig. P5.91 using source transformation.

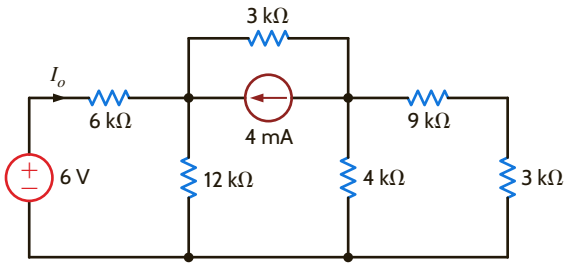

Figure P5.91

5.92 Find V_o in the network in Fig. P5.92 using source transformation.

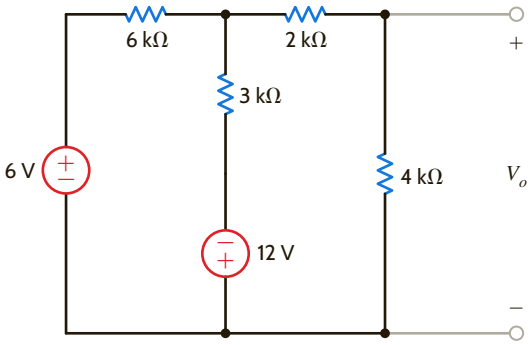

Figure P5.92

5.93 Use source transformation to find I_o in the network in Fig. P5.93.

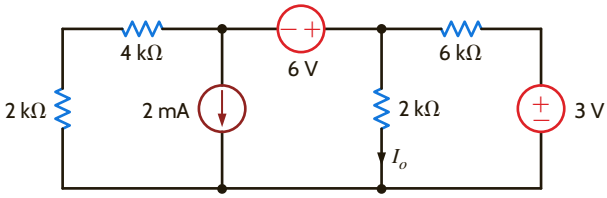

Figure P5.93

5.94 Find the Thévenin equivalent circuit of the network in Fig. P5.94 at the terminals A–B.

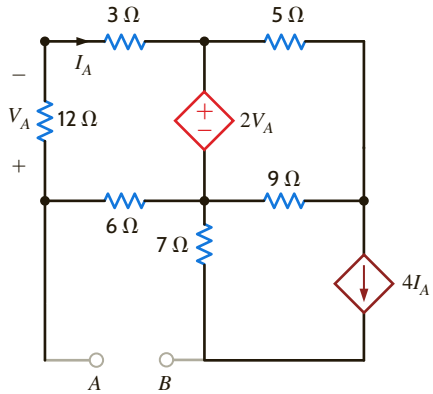

Figure P5.94

5.95 Find I_o in the circuit in Fig. P5.95 using source transformation.

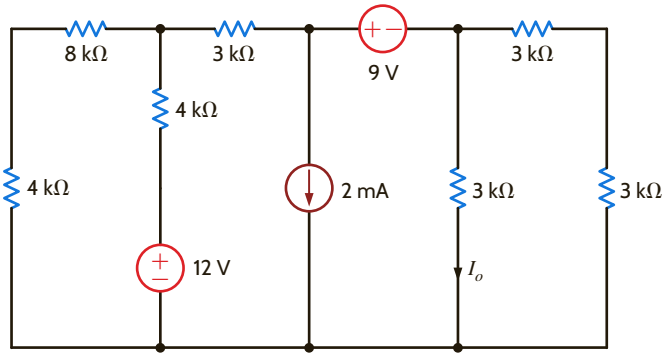

Figure P5.95

5.96 Find I_o in the network in Fig. P5.96 using source transformation.

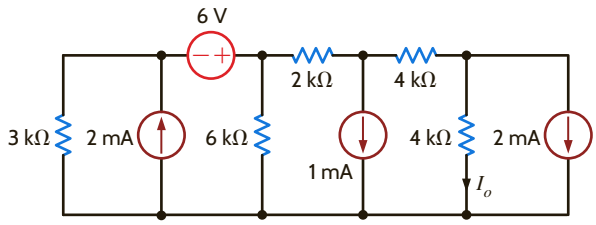

Figure P5.96

5.97 Find I_o in the network in Fig. P5.97 using source transformation.

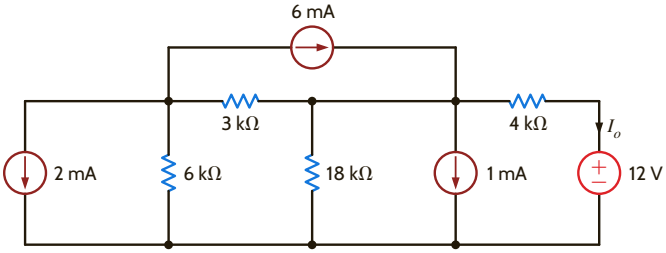

Figure P5.97

5.98 Find V_o in the network in Fig. P5.98 using source transformation.

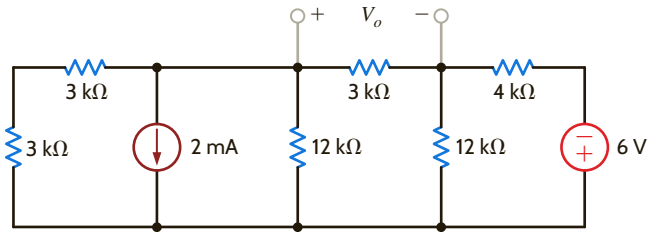

Figure P5.98

5.99 Find I_o in the network in Fig. P5.99 using source transformation.

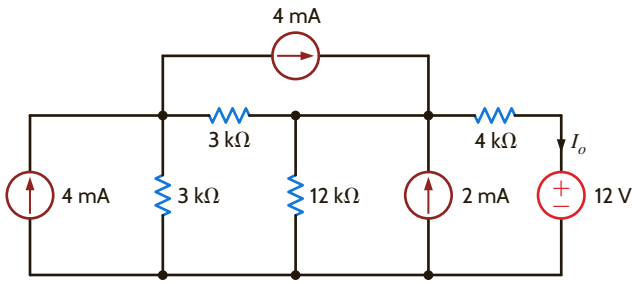

Figure P5.99

5.100 Find I_o in the circuit in Fig. P5.100 using source transformation.

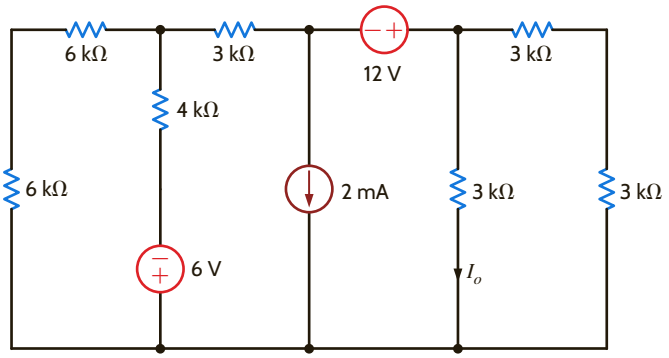

Figure P5.100

5.101 Use source transformation to find I_o in the network in Fig. P5.101.

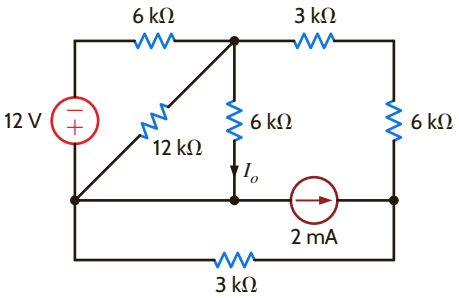

Figure P5.101

5.102 Using source transformation, find V_o in the circuit in Fig. P5.102.

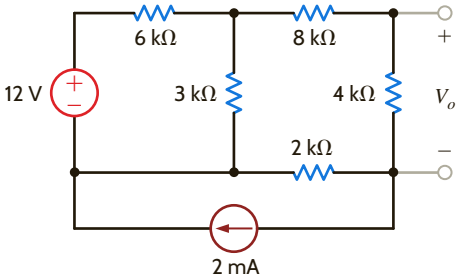

Figure P5.102

5.103 Use source transformation to find I_o in the circuit in Fig. P5.103.

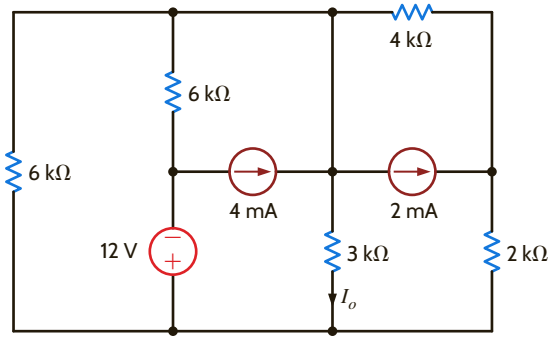

Figure P5.103

5.104 Use source transformation to find I_o in the circuit in Fig. P5.104.

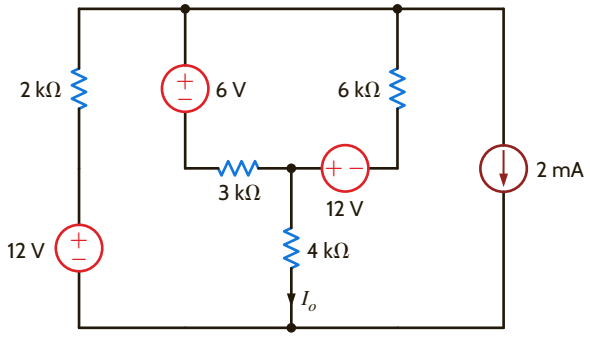

Figure P5.104

5.105 Use source transformation to find I_o in the circuit in Fig. P5.105.

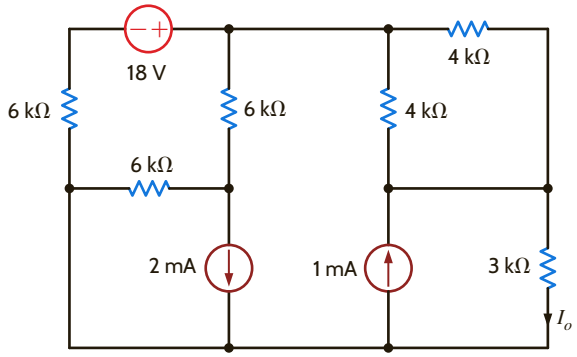

Figure P5.105

5.106 Using source transformation, find I_o in the circuit in Fig. P5.106.

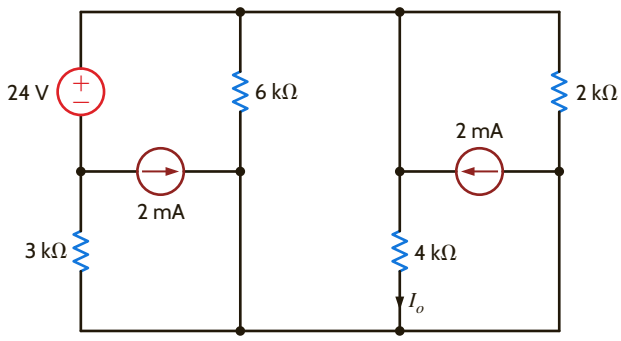

Figure P5.106

5.107 Use source exchange to find I_o in the network in Fig. P5.107.

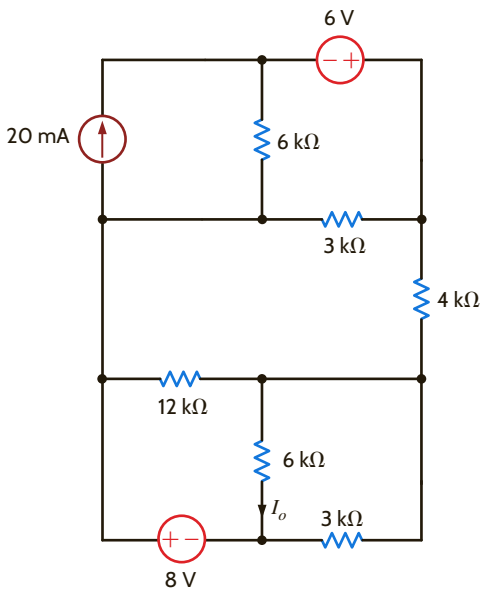

Figure P5.107

5.108 Use a combination of Y-Δ transformation and source transformation to find I_o in the circuit in Fig. P5.108.

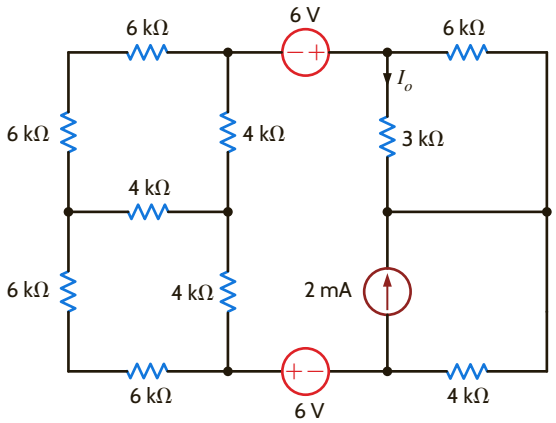

Figure P5.108

5.109 Use source exchange to find I_o in the circuit in Fig. P5.109.

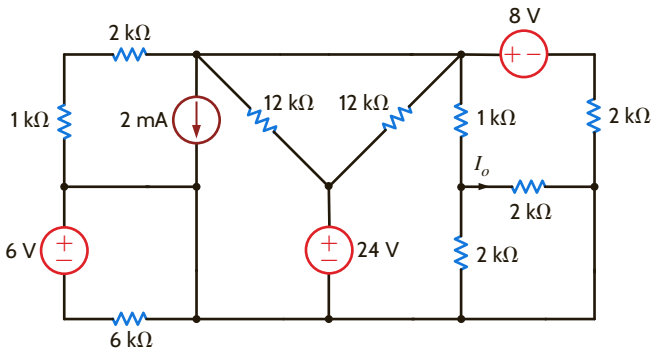

Figure P5.109

5.110 Use source exchange to find I_o in the network in Fig. P5.110.

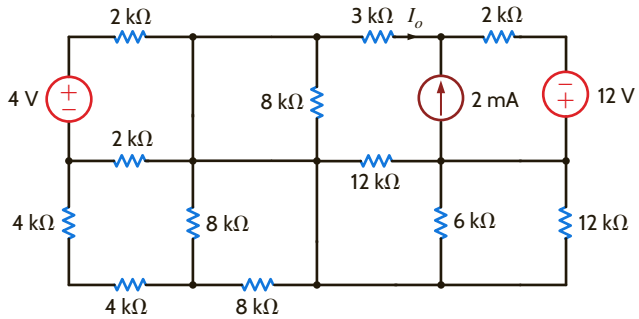

Figure P5.110

5.111 Use source exchange to find I_o in the network in Fig. P5.111.

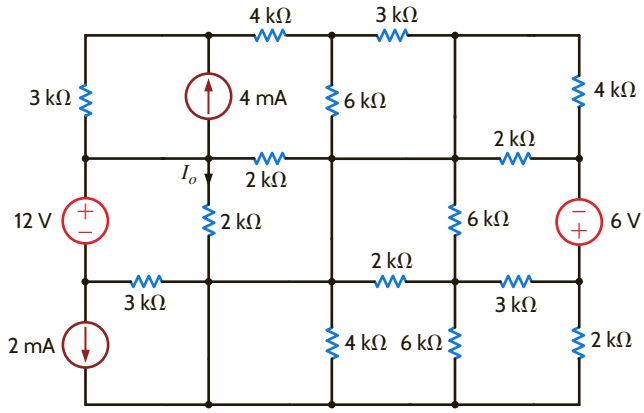

Figure P5.111

5.112 Find R_L in the network in Fig. P5.112 in order to achieve maximum power transfer.

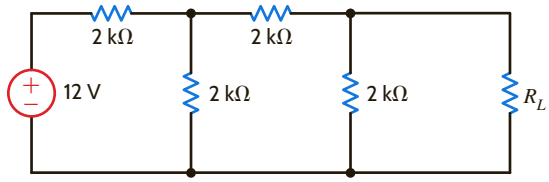

Figure P5.112

5.113 In the network in Fig. P5.113, find R_L for maximum power transfer and the maximum power transferred to this load.

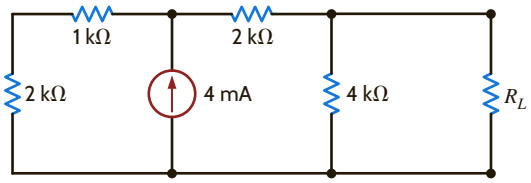

Figure P5.113

5.114 Find R_L for maximum power transfer and the maximum power that can be transferred to the load in Fig. P5.114.

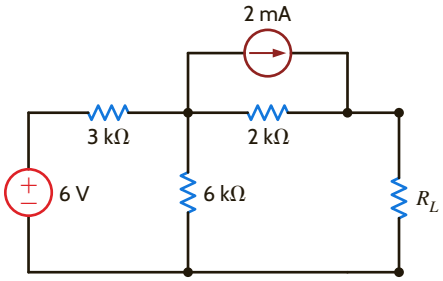

Figure P5.114

5.115 Find R_L for maximum power transfer and the maximum power that can be transferred to the load in the circuit in Fig. P.5.115.

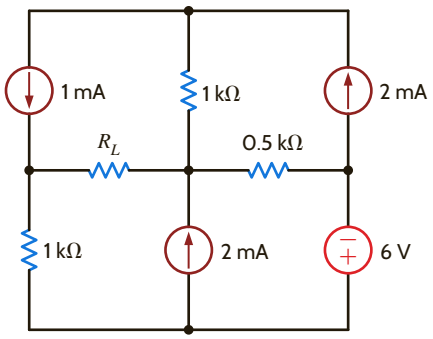

Figure P5.115

5.116 Find R_L for maximum power transfer and the maximum power that can be transferred to the load in the network in Fig. P5.116.

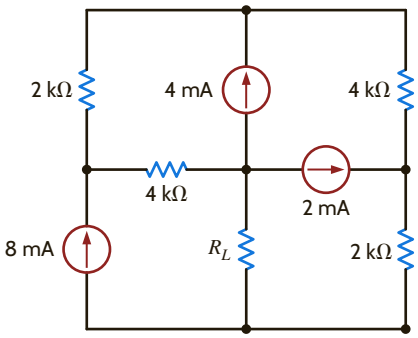

Figure P5.116

5.117 Find R_L for maximum power transfer and the maximum power that can be transferred to the load in the circuit in Fig. P5.117.

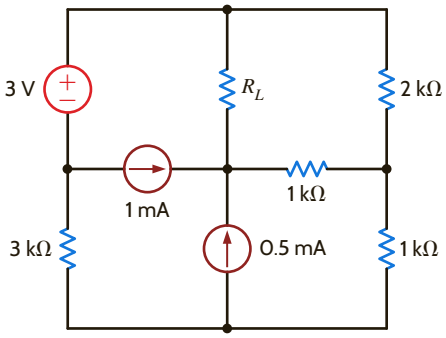

Figure P5.117

5.118 Determine the value of R_L in the network in Fig. P5.118 for maximum power transfer.

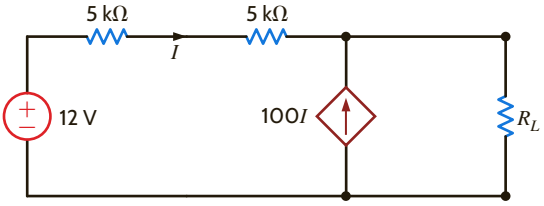

Figure P5.118

5.119 Find R_L for maximum power transfer and the maximum power that can be transferred to the load in Fig. P5.119.

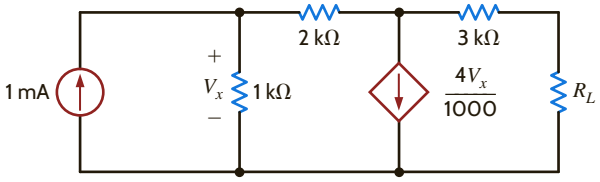

Figure P5.119

5.120 Find the value of R_L in the network in Fig. P5.120 for maximum power transfer.

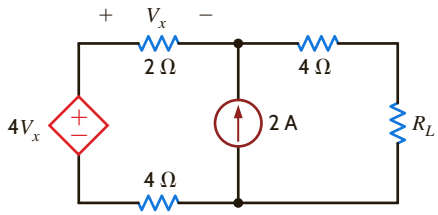

Figure P5.120

5.121 Find the value of R_L for maximum power transfer and the maximum power that can be transferred to R_L in the circuit of Fig. P5.121.

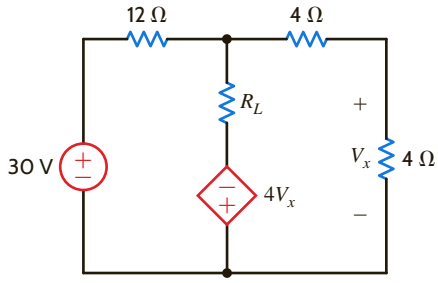

Figure P5.121

5.122 Find the maximum power that can be transferred to R_L in the network in Fig. P5.122.

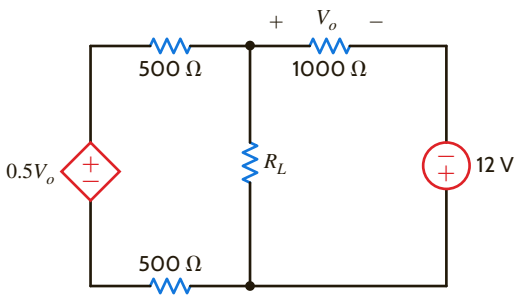

Figure P5.122

5.123 In the network in Fig. P5.123, find the value of R_L for maximum power transfer. In addition, calculate the maximum power dissipated in R_L under these conditions.

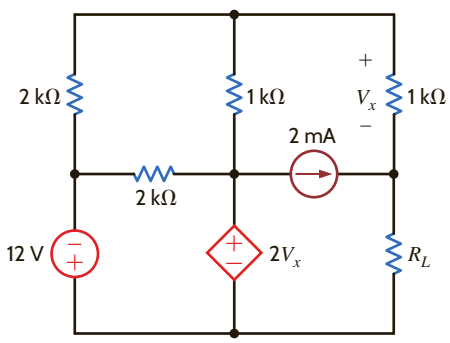

Figure P5.123

5.124 In the network in Fig. P5.124, find the value of R_L for maximum power transfer. In addition, calculate the power dissipated in R_L under these conditions.

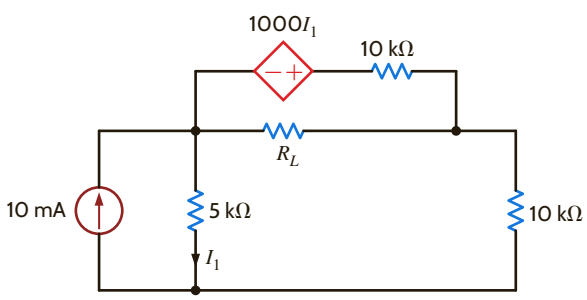

Figure P5.124

5.125 Find the value of R_L in Fig. P5.125 for maximum power transfer. In addition, calculate the power dissipated in R_L under these conditions.

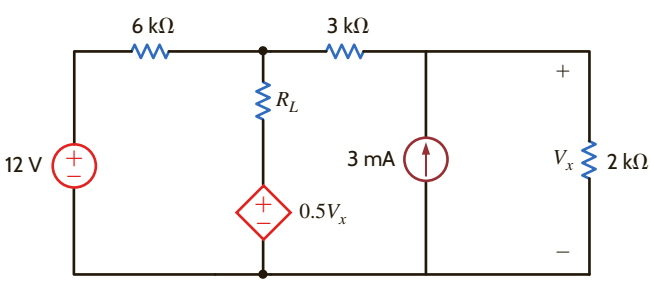

Figure P5.125

5.126 Calculate the maximum power that can be transferred to R_L in the circuit in Fig. P5.126.

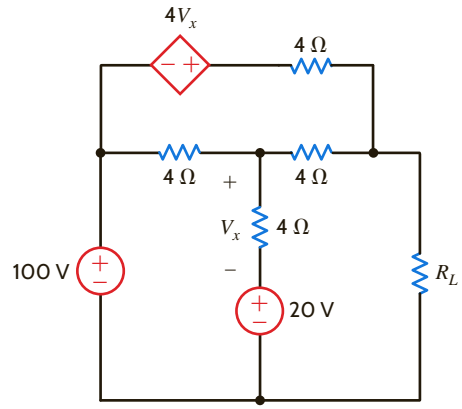

Figure P5.126

5.127 Find R_L for maximum power transfer and the maximum power that can be transferred in the network in Fig. P5.127.

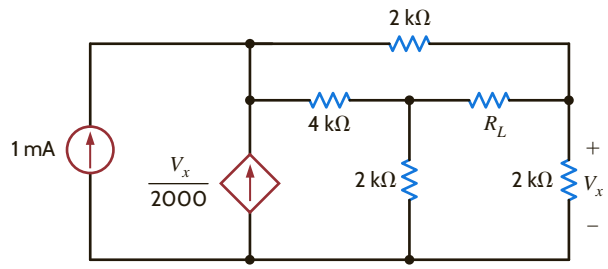

Figure P5.127

5.128 Find the value of R_L in Fig. P5.128 for maximum power transfer and the maximum power that can be dissipated in R_L.

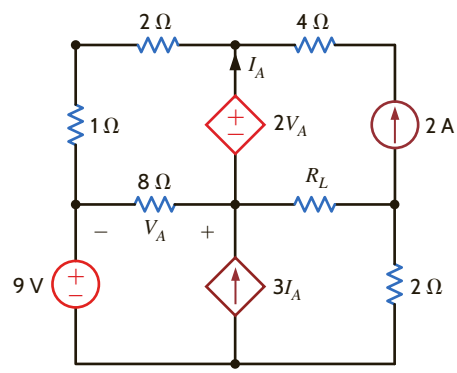

Figure P5.128

5.129 A cell phone antenna picks up a call. If the antenna and cell phone are modeled as shown in Fig. P5.129,

(a) Find R_{cell} for maximum output power.

(b) Determine the value of P_{out}.

(c) Determine the corresponding value of P_{ant}.

(d) Find V_o/V_{ant}.

(e) Determine the amount of power lost in R_{ant}.

(f) Calculate the efficiency $\eta = P_{out}/P_{ant}$.

(g) Determine the value of R_{cell} such that the efficiency is 90%.

(h) Given the change in (g), what is the new value of P_{ant}?

(i) Given the change in (g), what is the new value of P_{out}?

(j) Comment on the results obtained in (i) and (b).

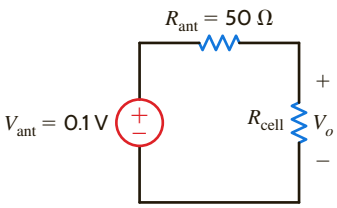

Figure P5.129

5.130 Some young engineers at the local electrical utility are debating ways to lower operating costs. They know that if they can reduce losses, they can lower operating costs. The question is whether they should design for maximum power transfer or maximum efficiency, where efficiency is defined as the ratio of customer power to power generated. Use the model in Fig. P5.130 to analyze this issue and justify your conclusions. Assume that both the generated voltage and the customer load are constant.

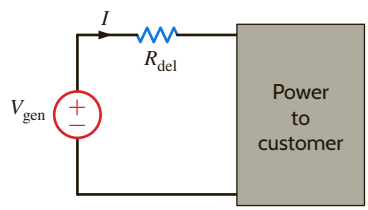

Figure P5.130

TYPICAL PROBLEMS FOUND ON THE FE EXAM

5PFE-1 Determine the maximum power that can be delivered to the load R_L in the network in Fig. 5PFE-1.

a. 2 mW **c.** 4 mW

b. 10 mW **d.** 8 mW

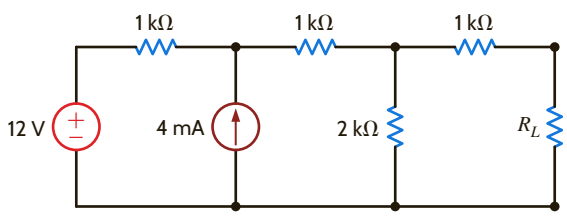

Figure 5PFE-1

5PFE-2 Find the value of the load R_L in the network in Fig. 5PFE-2 that will achieve maximum power transfer, and determine that value of the maximum power.

a. 22.5 mW **c.** 64.3 mW

b. 80.4 mW **d.** 121.5 mW

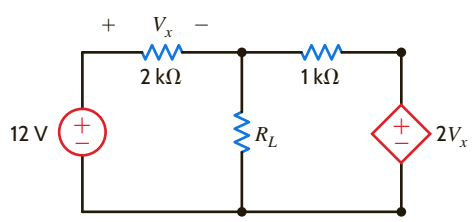

Figure 5PFE-2

5PFE-3 Find the value of R_L in the network in Fig. 5PFE-3 for maximum power transfer to this load.

a. 12.92 Ω **c.** 6.78 Ω

b. 8.22 Ω **d.** 10.53 Ω

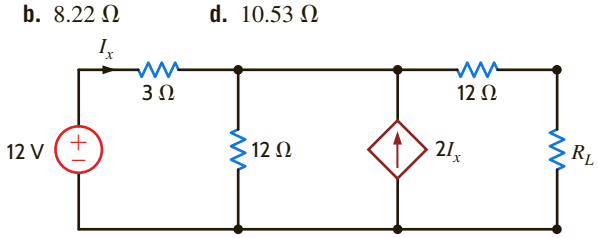

Figure 5PFE-3

5PFE-4 What is the current I in Fig. 5PFE-4?

a. 8 A **c.** 0 A

b. −4 A **d.** 4 A

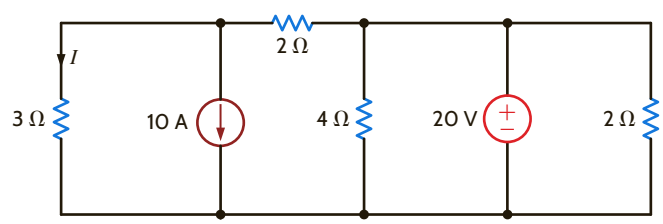

Figure 5PFE-4

5PFE-5 What is the open-circuit voltage V_{oc} at terminals a and b of the circuit in Fig. 5PFE-5?

a. 8 V **c.** 4 V

b. 12 V **d.** 10 V

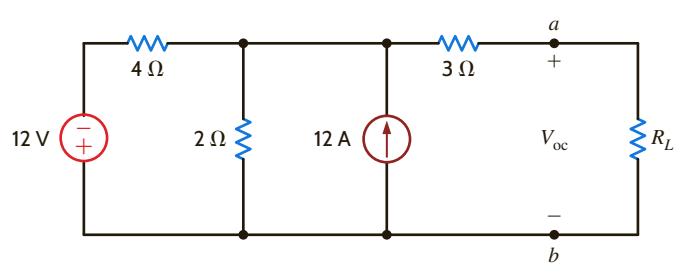

Figure 5PFE-5

ChapterSix

THE LEARNING GOALS FOR THIS CHAPTER ARE THAT STUDENTS SHOULD BE ABLE TO:

- Use circuit models for inductors and capacitors to calculate voltages, currents, and powers.
- Determine the stored energy in capacitors and inductors.
- Apply the concepts of continuity of current for an inductor and continuity of voltage for a capacitor.
- Calculate the voltages and currents for capacitors and inductors in electric circuits with dc sources.
- Determine the equivalent capacitance for capacitors in series and parallel.
- Determine the equivalent inductance for inductors in series and parallel.

CAPACITANCE AND INDUCTANCE

EXPERIMENTS THAT HELP STUDENTS DEVELOP AN UNDERSTANDING OF ENERGY STORAGE ELEMENTS ARE:

- Construct a Capacitor: Calculate the capacitance of an element constructed from aluminum foil and plastic wrap. Measure the capacitance of the element and explain the difference between the predicted and measured values.
- Construct an Inductor: Calculate the inductance and parasitic resistance of an element constructed by wrapping wire around a cylinder. Determine the inductance from the measured currents and voltages in a circuit containing the inductor. Explore the effect of an iron core as opposed to an air core on the inductance of the element.
- Energy Storage Elements in Series and Parallel: Determine the equivalent capacitance of capacitors connected in series and parallel and the equivalent inductance of series and parallel combinations of inductors analytically, using PSpice, and then from data collected on simple *RC* and *RL* circuits.
- A Differentiator Circuit: Investigate the input-to-output relationship of an op-amp differentiator circuit.
- A Circuit with Two Ideal Differentiators: Explore the frequency dependence of noise in a differentiator circuit by comparing the operation of two differentiators that have unity gain at different frequencies.
- An Integrator Circuit: Investigate the input-to-output relationship and the stability of an op-amp integrator circuit.

6.1 Capacitors

A *capacitor* is a circuit element that consists of two conducting surfaces separated by a nonconducting, or *dielectric*, material. A simplified capacitor and its electrical symbol are shown in **Fig. 6.1**.

There are many different kinds of capacitors, and they are categorized by the type of dielectric material used between the conducting plates. Although any good insulator can serve as a dielectric, each type has characteristics that make it more suitable for particular applications.

For general applications in electronic circuits (e.g., coupling between stages of amplification), the dielectric material may be paper impregnated with oil or wax, mylar, polystyrene, mica, glass, or ceramic.

Ceramic dielectric capacitors constructed of barium titanates have a large capacitance-to-volume ratio because of their high dielectric constant. Mica, glass, and ceramic dielectric capacitors will operate satisfactorily at high frequencies.

Aluminum electrolytic capacitors, which consist of a pair of aluminum plates separated by a moistened borax paste electrolyte, can provide high values of capacitance in small volumes. They are typically used for filtering, bypassing, and coupling, and in power supplies and motor-starting applications. Tantalum electrolytic capacitors have lower losses and more stable characteristics than those of aluminum electrolytic capacitors. **Fig. 6.2** shows a variety of typical discrete capacitors.

In addition to these capacitors, which we deliberately insert in a network for specific applications, stray capacitance is present any time there is a difference in potential between two conducting materials separated by a dielectric. Because this stray capacitance can cause unwanted coupling between circuits, extreme care must be exercised in the layout of electronic systems on printed circuit boards.

Capacitance is measured in coulombs per volt or farads. The unit *farad* (F) is named after Michael Faraday, a famous English physicist. Capacitors may be fixed or variable and typically range from thousands of microfarads (μF) to a few picofarads (pF).

Figure 6.1
A capacitor and its electrical symbol.

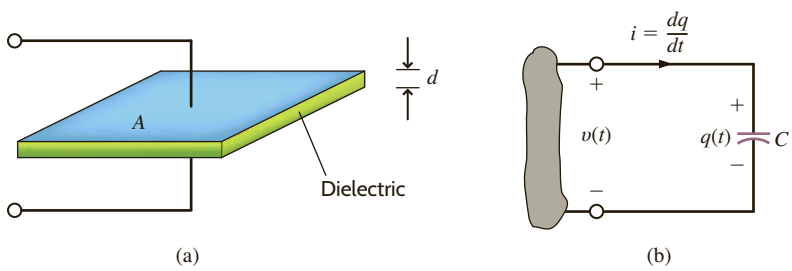

HINT
Note the use of the passive sign convention.

Figure 6.2
Some typical capacitors (Courtesy of Mark Nelms and Jo Ann Loden).

Capacitor technology, initially driven by the modern interest in electric vehicles, is rapidly changing, however. For example, the capacitor on the left in the photograph in **Fig. 6.3** is a double-layer capacitor, which is rated at 2.5 V and 100 F. An aluminum electrolytic capacitor, rated at 25 V and 68,000 μF, is shown on the right in this photograph. The electrolytic capacitor can store $0.5 * 6.8 \times 10^{-2} * 25^2 = 21.25$ joules (J). The double-layer capacitor can store $0.5 * 100 * 2.5^2 = 312.5$ J. Let's connect 10 of the 100-F capacitors in series for an equivalent 25-V capacitor. The energy stored in this equivalent capacitor is 3125 J. We would need to connect 147 electrolytic capacitors in parallel to store that much energy.

Figure 6.3

A 100-F double-layer capacitor and a 68,000-μF electrolytic capacitor (Courtesy of Mark Nelms and Jo Ann Loden).

It is interesting to calculate the dimensions of a simple equivalent capacitor consisting of two parallel plates each of area A, separated by a distance d as shown in Fig. 6.1. We learned in basic physics that the capacitance of two parallel plates of area A, separated by distance d, is

$$C = \frac{\varepsilon_o A}{d}$$

where ε_o, the permitivity of free space, is 8.85×10^{-12} F/m. If we assume the plates are separated by a distance in air of the thickness of one sheet of oil-impregnated paper, which is about 1.016×10^{-4} m, then

$$100 \text{ F} = \frac{(8.85 \times 10^{-12})A}{1.016 \times 10^{-4}}$$

$$A = 1.148 \times 10^9 \text{ m}^2$$

and since 1 square mile is equal to 2.59×10^6 square meters, the area is

$$A \approx 443 \text{ square miles}$$

which is the area of a medium-sized city! It would now seem that the double-layer capacitor in the photograph is much more impressive than it originally appeared. This capacitor is actually constructed using a high surface area material such as powdered carbon that is adhered to a metal foil. There are literally millions of pieces of carbon employed to obtain the required surface area.

Suppose now that a source is connected to the capacitor shown in Fig. 6.1; then positive charges will be transferred to one plate and negative charges to the other. The charge on the capacitor is proportional to the voltage across it such that

$$q = Cv \tag{6.1}$$

where C is the proportionality factor known as the capacitance of the element in farads.

The charge differential between the plates creates an electric field that stores energy. Because of the presence of the dielectric, the conduction current that flows in the wires that connect the capacitor to the remainder of the circuit cannot flow internally between the plates. However, via electromagnetic field theory it can be shown that this conduction current is equal to the displacement current that flows between the plates of the capacitor and is present any time that an electric field or voltage varies with time.

Our primary interest is in the current–voltage terminal characteristics of the capacitor. Since the current is

$$i = \frac{dq}{dt}$$

then for a capacitor

$$i = \frac{d}{dt}(Cv)$$

which for constant capacitance is

$$i = C\frac{dv}{dt} \tag{6.2}$$

Eq. (6.2) can be rewritten as

$$dv = \frac{1}{C} i\, dt$$

Integrating this expression from $t = -\infty$ to some time t and assuming $v(-\infty) = 0$ yields

$$v(t) = \frac{1}{C}\int_{-\infty}^{t} i(x)\,dx \tag{6.3}$$

where $v(t)$ indicates the time dependence of the voltage. Eq. (6.3) can be expressed as two integrals, so that

$$\begin{aligned} v(t) &= \frac{1}{C}\int_{-\infty}^{t_0} i(x)\,dx + \frac{1}{C}\int_{t_0}^{t} i(x)\,dx \\ &= v(t_0) + \frac{1}{C}\int_{t_0}^{t} i(x)\,dx \end{aligned} \tag{6.4}$$

where $v(t_0)$ is the voltage due to the charge that accumulates on the capacitor from time $t = -\infty$ to time $t = t_0$.

The energy stored in the capacitor can be derived from the power that is delivered to the element. This power is given by the expression

$$p(t) = v(t)i(t) = Cv(t)\frac{dv(t)}{dt} \tag{6.5}$$

and hence, the energy stored in the electric field is

$$\begin{aligned} w_C(t) &= \int_{-\infty}^{t} Cv(x)\frac{dv(x)}{dx}\,dx = C\int_{-\infty}^{t} v(x)\frac{dv(x)}{dx}\,dx \\ &= C\int_{v(-\infty)}^{v(t)} v(x)\,dv(x) = \frac{1}{2}Cv^2(x)\Big|_{v(-\infty)}^{v(t)} \end{aligned}$$

$$= \frac{1}{2}Cv^2(t)\ \text{J} \tag{6.6}$$

since $v(t = -\infty) = 0$. The expression for the energy can also be written using Eq. (6.1) as

$$w_C(t) = \frac{1}{2}\frac{q^2(t)}{C} \tag{6.7}$$

Eqs. (6.6) and (6.7) represent the energy stored by the capacitor, which, in turn, is equal to the work done by the source to charge the capacitor.

Now let's consider the case of a dc voltage applied across a capacitor. From Eq. (6.2), we see that the current flowing through the capacitor is directly proportional to the time rate of change of the voltage across the capacitor. A dc voltage does not vary with time, so the current flowing through the capacitor is zero. We can say that a capacitor is "an open circuit to dc" or "blocks dc." Capacitors are often utilized to remove or filter out an unwanted dc voltage. In analyzing a circuit containing dc voltage sources and capacitors, we can replace the capacitors with an open circuit and calculate voltages and currents in the circuit using our many analysis tools.

Note that the power absorbed by a capacitor, given by Eq. (6.5), is directly proportional to the time rate of change of the voltage across the capacitor. What if we had an instantaneous change in the capacitor voltage? This would correspond to $dv/dt = \infty$ and infinite power. In Chapter 1, we ruled out the possibility of any sources of infinite power. Since we only have finite power sources, the voltage across a capacitor cannot change instantaneously. This will be a particularly helpful idea in the next chapter when we encounter circuits containing switches. This idea of "continuity of voltage" for a capacitor tells us that the voltage across the capacitor just after a switch moves is the same as the voltage across the capacitor just before that switch moves.

The polarity of the voltage across a capacitor being charged is shown in Fig. 6.1b. In the ideal case, the capacitor will hold the charge for an indefinite period of time, if the source is removed. If at some later time an energy-absorbing device (e.g., a flash bulb) is connected across the capacitor, a discharge current will flow from the capacitor and, therefore, the capacitor will supply its stored energy to the device.

EXAMPLE 6.1

If the charge accumulated on two parallel conductors charged to 12 V is 600 pC, what is the capacitance of the parallel conductors?

SOLUTION

Using Eq. (6.1), we find that

$$C = \frac{Q}{V} = \frac{(600)(10^{-12})}{12} = 50 \text{ pF}$$

EXAMPLE 6.2

The voltage across a 5-μF capacitor has the waveform shown in Fig. 6.4a. Determine the current waveform.

SOLUTION

Note that

$$\begin{aligned} v(t) &= \frac{24}{6 \times 10^{-3}} t && 0 \le t \le 6 \text{ ms} \\ &= \frac{-24}{2 \times 10^{-3}} t + 96 && 6 \le t < 8 \text{ ms} \\ &= 0 && 8 \text{ ms} \le t \end{aligned}$$

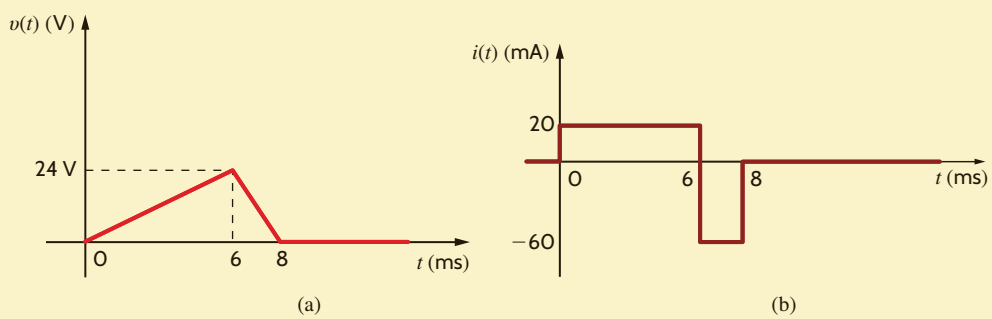

Figure 6.4
Voltage and current waveforms for a 5-μF capacitor.

Using Eq. (6.2), we find that

$$\begin{aligned} i(t) &= C\frac{dv(t)}{dt} \\ &= 5 \times 10^{-6}(4 \times 10^{3}) && 0 \le t \le 6 \text{ ms} \\ &= 20 \text{ mA} && 0 \le t \le 6 \text{ ms} \\ i(t) &= 5 \times 10^{-6}(-12 \times 10^{3}) && 6 \le t \le 8 \text{ ms} \\ &= -60 \text{ mA} && 6 \le t < 8 \text{ ms} \end{aligned}$$

and

$$i(t) = 0 \qquad 8 \text{ ms} \le t$$

Therefore, the current waveform is as shown in Fig. 6.4b, and $i(t) = 0$ for $t > 8$ ms.

EXAMPLE 6.3

Determine the energy stored in the electric field of the capacitor in Example 6.2 at $t = 6$ ms.

SOLUTION

Using Eq. (6.6), we have

$$w(t) = \frac{1}{2} C v^2(t)$$

At $t = 6$ ms,

$$w(6 \text{ ms}) = \frac{1}{2}(5 \times 10^{-6})(24)^2$$
$$= 1440 \ \mu\text{J}$$

LEARNING ASSESSMENT

E6.1 A 10-μF capacitor has an accumulated charge of 500 nC. Determine the voltage across the capacitor.

ANSWER: 0.05 V.

EXAMPLE 6.4

The current in an initially uncharged 4-μF capacitor is shown in **Fig. 6.5a**. Let us derive the waveforms for the voltage, power, and energy and compute the energy stored in the electric field of the capacitor at $t = 2$ ms.

SOLUTION

The equations for the current waveform in the specific time intervals are

$$i(t) = \frac{16 \times 10^{-6} t}{2 \times 10^{-3}} \qquad 0 \le t \le 2 \text{ ms}$$
$$= -8 \times 10^{-6} \qquad 2 \text{ ms} \le t \le 4 \text{ ms}$$
$$= 0 \qquad 4 \text{ ms} < t$$

Since $v(0) = 0$, the equation for $v(t)$ in the time interval $0 \le t \le 2$ ms is

$$v(t) = \frac{1}{(4)(10^{-6})} \int_0^t 8(10^{-3}) x \, dx = 10^3 t^2$$

and hence,

$$v(2 \text{ ms}) = 10^3(2 \times 10^{-3})^2 = 4 \text{ mV}$$

In the time interval $2 \text{ ms} \le t \le 4$ ms,

$$v(t) = \frac{1}{(4)(10^{-6})} \int_{2(10^{-3})}^{t} - (8)(10^{-6}) dx + (4)(10^{-3})$$
$$= -2t + 8 \times 10^{-3}$$

The waveform for the voltage is shown in **Fig. 6.5b**.

Since the power is $p(t) = v(t)i(t)$, the expression for the power in the time interval $0 \le t \le 2$ ms is $p(t) = 8t^3$. In the time interval $2 \text{ ms} \le t \le 4$ ms, the equation for the power is

$$p(t) = -(8)(10^{-6})(-2t + 8 \times 10^{-3})$$
$$= 16(10^{-6})t - 64(10^{-9})$$

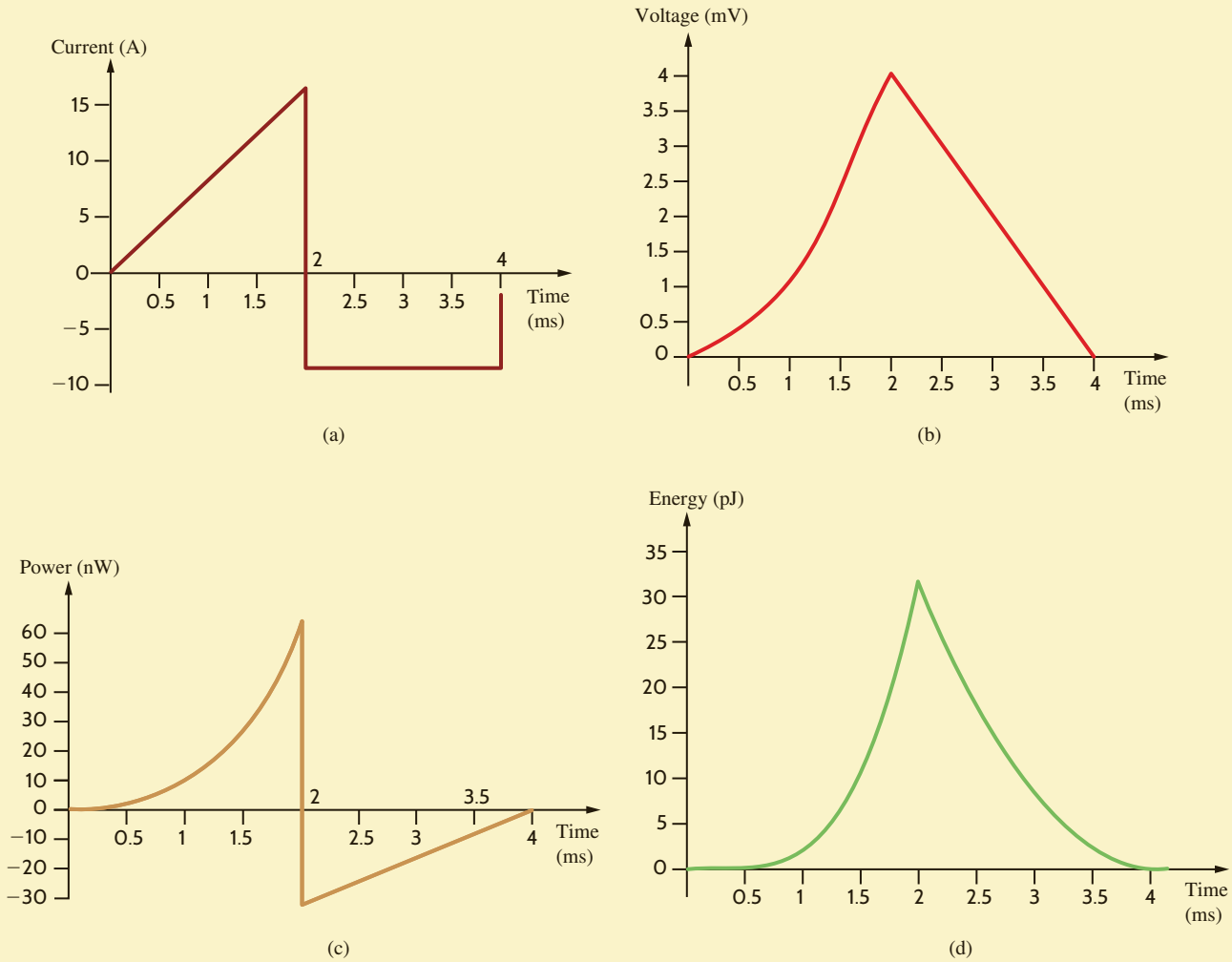

Figure 6.5

Waveforms used in Example 6.4.

The power waveform is shown in **Fig. 6.5c**. Note that during the time interval $0 \le t \le 2$ ms, the capacitor is absorbing energy and during the interval 2 ms $\le t \le 4$ ms, it is delivering energy.

The energy is given by the expression

$$w(t) = \int_{t_0}^{t} p(x)dx + w(t_0)$$

In the time interval $0 \le t \le 2$ ms,

$$w(t) = \int_{0}^{t} 8x^3 dx = 2t^4$$

Hence,

$$w(2 \text{ ms}) = 32 \text{ pJ}$$

In the time interval $2 \le t \le 4$ ms,

$$\begin{aligned} w(t) &= \int_{2\times 10^{-3}}^{t} [(16 \times 10^{-6})x - (64 \times 10^{-9})]\, dx + 32 \times 10^{-12} \\ &= [(8 \times 10^{-6})x^2 - (64 \times 10^{-9})x]_{2\times 10^{-3}}^{t} + 32 \times 10^{-12} \\ &= (8 \times 10^{-6})t^2 - (64 \times 10^{-9})t + 128 \times 10^{-12} \end{aligned}$$

From this expression we find that $w(2 \text{ ms}) = 32$ pJ and $w(4 \text{ ms}) = 0$. The energy waveform is shown in **Fig. 6.5d**.

LEARNING ASSESSMENTS

E6.2 The voltage across a 2-μF capacitor is shown in Fig. E6.2. Determine the waveform for the capacitor current.

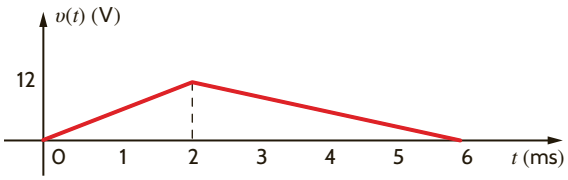

Figure E6.2

ANSWER:

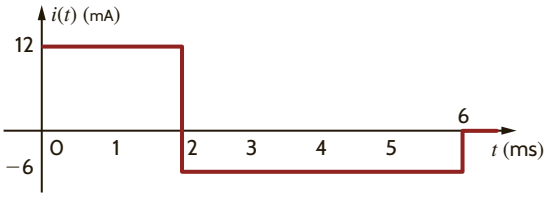

E6.3 Compute the energy stored in the electric field of the capacitor in Learning Assessment E6.2 at $t = 2$ ms.

ANSWER:
$w = 144$ μJ.

E6.4 The voltage across a 5-μF capacitor is shown in Fig. E6.4. Find the waveform for the current in the capacitor. How much energy is stored in the capacitor at $t = 4$ ms?

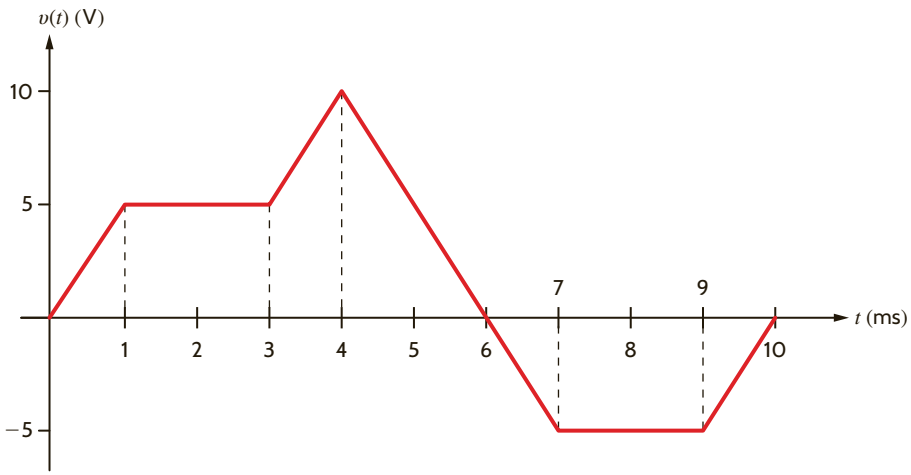

Figure E6.4

ANSWER:
250 μJ.

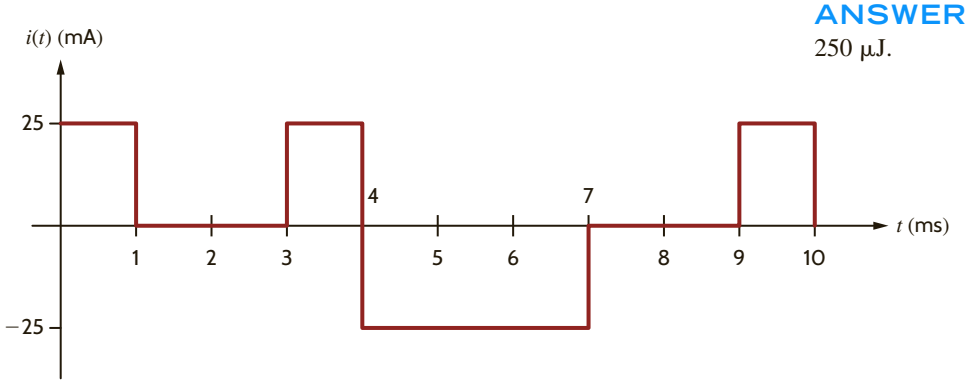

E6.5 The waveform for the current in a 1-nF capacitor is Fig. E6.5. If the capacitor has an initial voltage of −5 V, determine the waveform for the capacitor voltage. How much energy is stored in the capacitor at $t = 6$ ms?

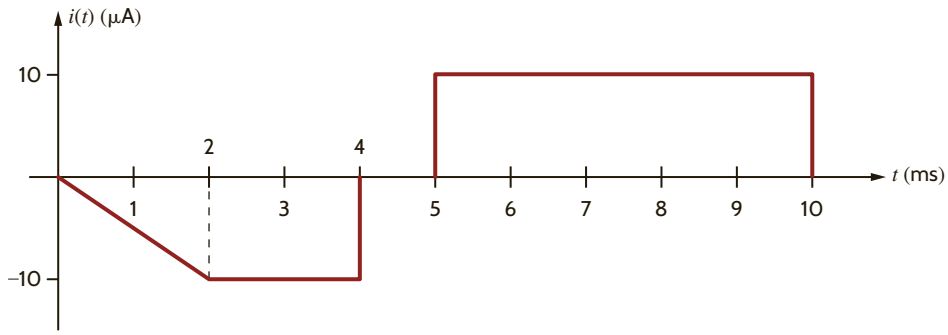

Figure E6.5

ANSWER:
312.5 nJ.

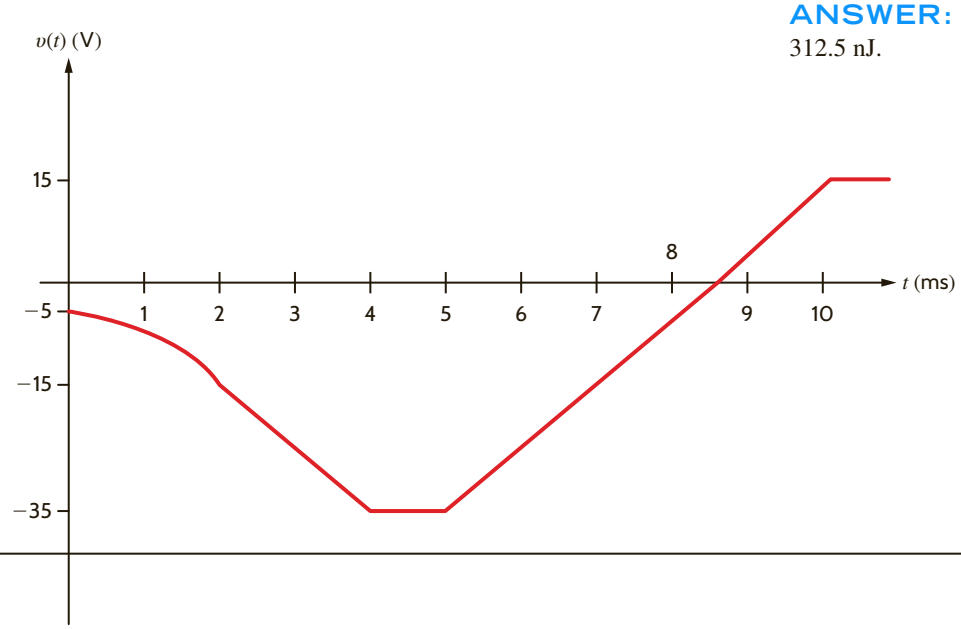

6.2 Inductors

An *inductor* is a circuit element that consists of a conducting wire usually in the form of a coil. Two typical inductors and their electrical symbol are shown in **Fig. 6.6**. Inductors are typically categorized by the type of core on which they are wound. For example, the core material may be air or any nonmagnetic material, iron, or ferrite. Inductors made with air or nonmagnetic materials are widely used in radio, television, and filter circuits. Iron-core inductors are used in electrical power supplies and filters. Ferrite-core inductors are widely used in high-frequency applications. Note that in contrast to the magnetic core that confines the flux, as shown in **Fig. 6.6b**, the flux lines for nonmagnetic inductors extend beyond the inductor itself, as illustrated in **Fig. 6.6a**. Like stray capacitance, stray inductance can result from any element carrying current surrounded by flux linkages. **Fig. 6.7** shows a variety of typical inductors.

Figure 6.6
Two inductors and their electrical symbol.

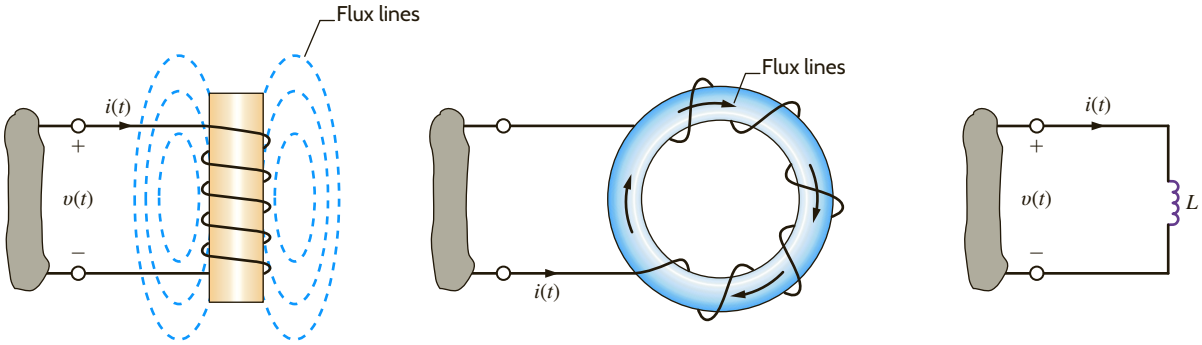

(a) (b) (c)

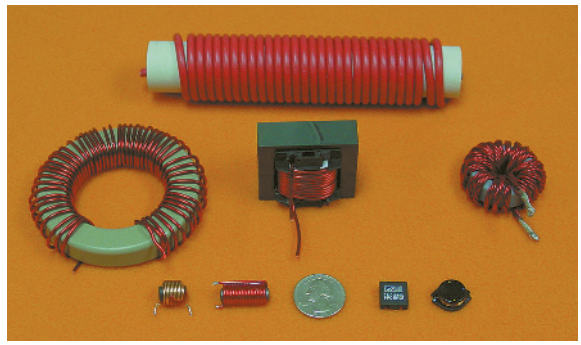

Figure 6.7
Some typical inductors (Courtesy of Mark Nelms and Jo Ann Loden).

From a historical standpoint, developments that led to the mathematical model we employ to represent the inductor are as follows. It was first shown that a current-carrying conductor would produce a magnetic field. It was later found that the magnetic field and the current that produced it were linearly related. Finally, it was shown that a changing magnetic field produced a voltage that was proportional to the time rate of change of the current that produced the magnetic field; that is,

$$v(t) = L\frac{di(t)}{dt} \tag{6.8}$$

The constant of proportionality L is called the inductance and is measured in the unit *henry*, named after the American inventor Joseph Henry, who discovered the relationship. As seen in Eq. (6.8), 1 henry (H) is dimensionally equal to 1 volt-second per ampere.

Following the development of the mathematical equations for the capacitor, we find that the expression for the current in an inductor is

$$i(t) = \frac{1}{L}\int_{-\infty}^{t} v(x)\,dx \tag{6.9}$$

which can also be written as

$$i(t) = i(t_0) + \frac{1}{L}\int_{t_0}^{t} v(x)\,dx \tag{6.10}$$

The power delivered to the inductor can be used to derive the energy stored in the element. This power is equal to

$$p(t) = v(t)i(t)$$

$$= \left[L\frac{di(t)}{dt}\right]i(t) \tag{6.11}$$

Therefore, the energy stored in the magnetic field is

$$w_L(t) = \int_{-\infty}^{t}\left[L\frac{di(x)}{dx}\right]i(x)\,dx$$

Following the development of Eq. (6.6), we obtain

$$w_L(t) = \frac{1}{2}Li^2(t)\ \text{J} \tag{6.12}$$

Now let's consider the case of a dc current flowing through an inductor. From Eq. (6.8), we see that the voltage across the inductor is directly proportional to the time rate of change of the current flowing through the inductor. A dc current does not vary with time, so the voltage across the inductor is zero. We can say that an inductor is "a short circuit to dc." In analyzing a circuit containing dc sources and inductors, we can replace any inductors with short circuits and calculate voltages and currents in the circuit using our many analysis tools.

Note from Eq. (6.11) that an instantaneous change in inductor current would require infinite power. Since we don't have any infinite power sources, the current flowing through an inductor cannot change instantaneously. This will be a particularly helpful idea in the next chapter when we encounter circuits containing switches. This idea of "continuity of current" for an inductor tells us that the current flowing through an inductor just after a switch moves is the same as the current flowing through an inductor just before that switch moves.

EXAMPLE 6.5

Find the total energy stored in the circuit of Fig. 6.8a.

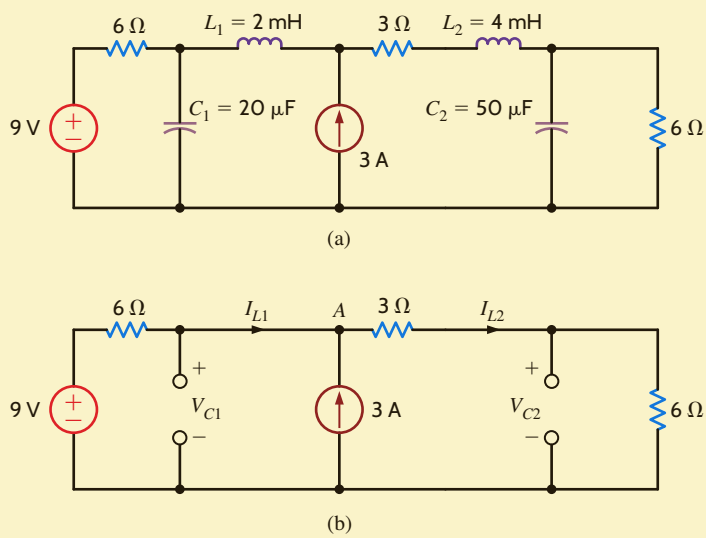

Figure 6.8
Circuits used in Example 6.5.

SOLUTION

This circuit has only dc sources. Based on our earlier discussions about capacitors and inductors and constant sources, we can replace the capacitors with open circuits and the inductors with short circuits. The resulting circuit is shown in Fig. 6.8b.

This resistive circuit can now be solved using any of the techniques we have learned in earlier chapters. If we apply KCL at node A, we get

$$I_{L2} = I_{L1} + 3$$

Applying KVL around the outside of the circuit yields

$$6I_{L1} + 3I_{L2} + 6I_{L2} = 9$$

Solving these equations yields $I_{L1} = -1.2$ A and $I_{L2} = 1.8$ A. The voltages V_{C1} and V_{C2} can be calculated from the currents:

$$V_{C1} = -6I_{L1} + 9 = 16.2 \text{ V}$$
$$V_{C2} = 6I_{L2} = 6(1.8) = 10.8 \text{ V}$$

The total energy stored in the circuit is the sum of the energy stored in the two inductors and two capacitors:

$$w_{L1} = \frac{1}{2}(2 \times 10^{-3})(-1.2)^2 = 1.44 \text{ mJ}$$

$$w_{L2} = \frac{1}{2}(4 \times 10^{-3})(1.8)^2 = 6.48 \text{ mJ}$$

$$w_{C1} = \frac{1}{2}(20 \times 10^{-6})(16.2)^2 = 2.62 \text{ mJ}$$

$$w_{C2} = \frac{1}{2}(50 \times 10^{-6})(10.8)^2 = 2.92 \text{ mJ}$$

The total stored energy is 13.46 mJ.

The inductor, like the resistor and capacitor, is a passive element. The polarity of the voltage across the inductor is shown in Fig. 6.6.

Practical inductors typically range from a few microhenrys to tens of henrys. From a circuit design standpoint it is important to note that inductors cannot be easily fabricated on an integrated circuit chip, and therefore chip designs typically employ only active electronic devices, resistors, and capacitors that can be easily fabricated in microcircuit form.

EXAMPLE 6.6

The current in a 10-mH inductor has the waveform shown in **Fig. 6.9a**. Determine the voltage waveform.

SOLUTION

Using Eq. (6.8) and noting that

$$i(t) = \frac{20 \times 10^{-3} t}{2 \times 10^{-3}} \qquad 0 \le t \le 2 \text{ ms}$$

$$i(t) = \frac{-20 \times 10^{-3} t}{2 \times 10^{-3}} + 40 \times 10^{-3} \qquad 2 \le t \le 4 \text{ ms}$$

and

$$i(t) = 0 \qquad 4 \text{ ms} < t$$

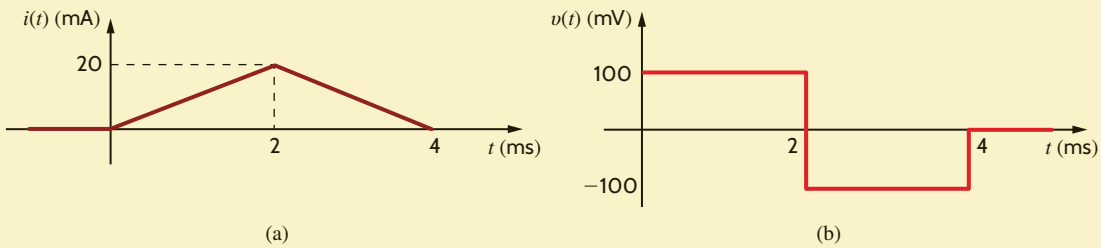

Figure 6.9
Current and voltage waveforms for a 10-mH inductor.

we find that

$$v(t) = (10 \times 10^{-3}) \frac{20 \times 10^{-3}}{2 \times 10^{-3}} \qquad 0 \le t \le 2 \text{ ms}$$

$$= 100 \text{ mV}$$

and

$$v(t) = (10 \times 10^{-3}) \frac{-20 \times 10^{-3}}{2 \times 10^{-3}} \qquad 2 \le t \le 4 \text{ ms}$$

$$= -100 \text{ mV}$$

and $v(t) = 0$ for $t > 4$ ms. Therefore, the voltage waveform is shown in **Fig. 6.9b**.

EXAMPLE 6.7

The current in a 2-mH inductor is

$$i(t) = 2 \sin 377t \text{ A}$$

SOLUTION

Determine the voltage across the inductor and the energy stored in the inductor.

From Eq. (6.8), we have

$$\begin{aligned} v(t) &= L\frac{di(t)}{dt} \\ &= (2 \times 10^{-3})\frac{d}{dt}(2 \sin 377t) \\ &= 1.508 \cos 377t \text{ V} \end{aligned}$$

and from Eq. (6.12),

$$\begin{aligned} w_L(t) &= \frac{1}{2}Li^2(t) \\ &= \frac{1}{2}(2 \times 10^{-3})(2 \sin 377t)^2 \\ &= 0.004 \sin^2 377t \text{ J} \end{aligned}$$

EXAMPLE 6.8

The voltage across a 200-mH inductor is given by the expression

$$\begin{aligned} v(t) &= (1 - 3t)e^{-3t} \text{ mV} \qquad t \geq 0 \\ &= 0 \qquad t < 0 \end{aligned}$$

Let us derive the waveforms for the current, energy, and power.

SOLUTION

The waveform for the voltage is shown in Fig. 6.10a. The current is derived from Eq. (6.10) as

$$\begin{aligned} i(t) &= \frac{10^3}{200}\int_0^t (1 - 3x)e^{-3x}\,dx \\ &= 5\left\{\int_0^t e^{-3x}\,dx - 3\int_0^t xe^{-3x}\,dx\right\} \\ &= 5\left\{\frac{e^{-3x}}{-3}\bigg|_0^t - 3\left[-\frac{e^{-3x}}{9}(3x + 1)\right]_0^t\right\} \\ &= 5te^{-3t} \text{ mA} \qquad t \geq 0 \\ &= 0 \qquad t < 0 \end{aligned}$$

A plot of the current waveform is shown in Fig. 6.10b.

The power is given by the expression

$$\begin{aligned} p(t) &= v(t)i(t) \\ &= 5t(1-3t)e^{-6t} \ \mu\text{W} \qquad t \geq 0 \\ &= 0 \qquad t < 0 \end{aligned}$$

The equation for the power is plotted in Fig. 6.10c.

The expression for the energy is

$$\begin{aligned} w(t) &= \frac{1}{2}Li^2(t) \\ &= 2.5t^2e^{-6t} \ \mu\text{J} \qquad t \geq 0 \\ &= 0 \qquad t < 0 \end{aligned}$$

This equation is plotted in Fig. 6.10d.

Figure 6.10
Waveforms used in Example 6.8.

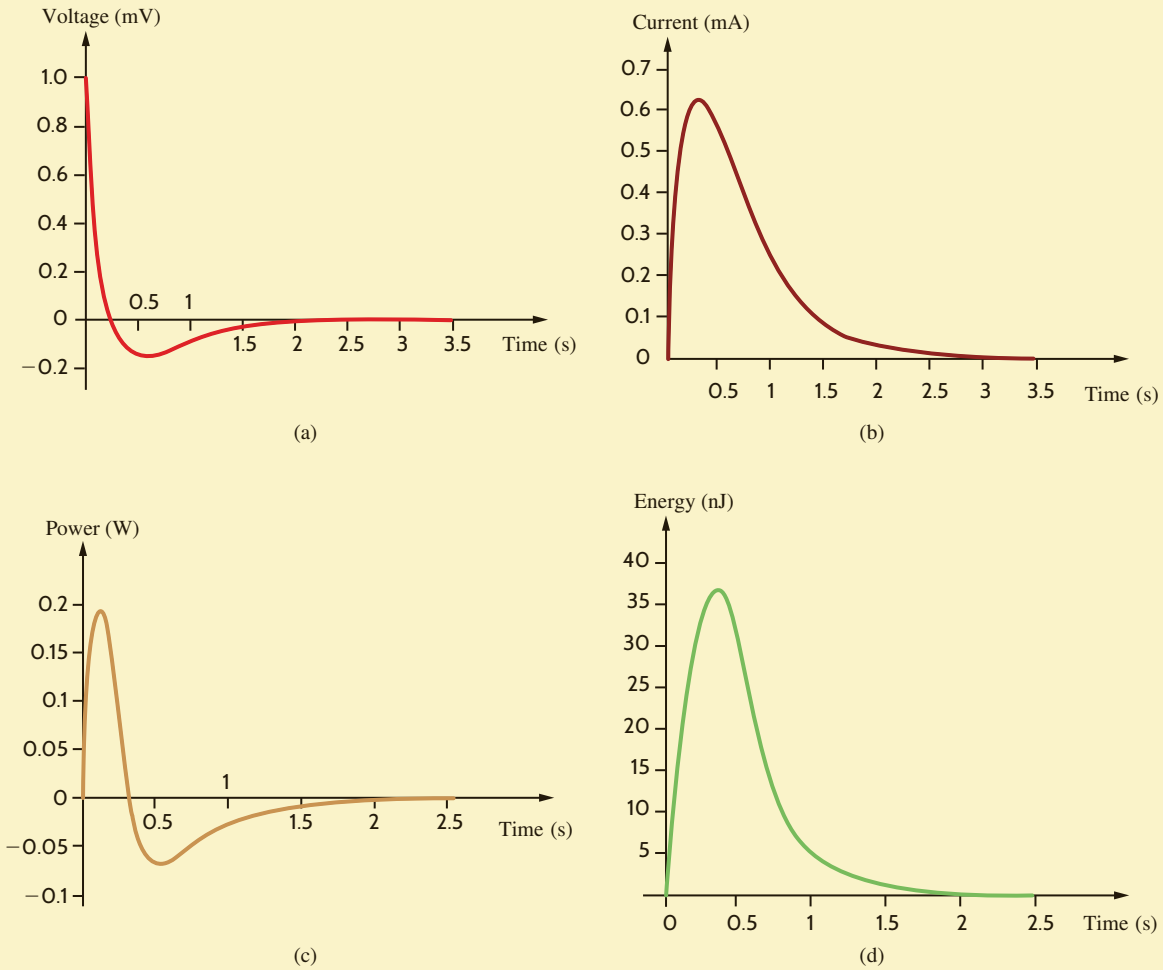

LEARNING ASSESSMENTS

E6.6 The current in a 5-mH inductor has the waveform shown in Fig. E6.6. Compute the waveform for the inductor voltage.

ANSWER:

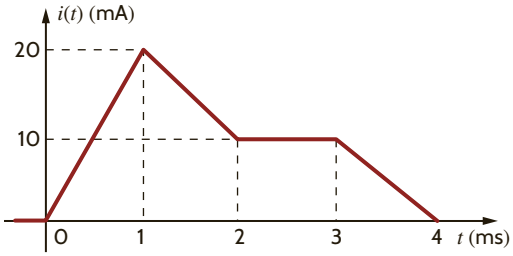

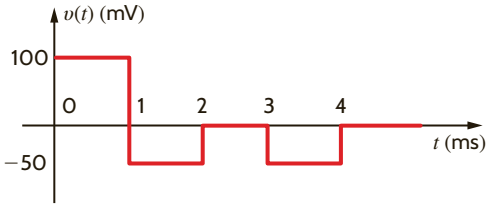

Figure E6.6

E6.7 Compute the energy stored in the magnetic field of the inductor in Learning Assessment E6.6 at $t = 1.5$ ms.

ANSWER:
$W = 562.5$ nJ.

E6.8 The current in a 2-H inductor is shown in Fig. E6.8. Find the waveform for the inductor voltage. How much energy is stored in the inductor at $t = 3$ ms?

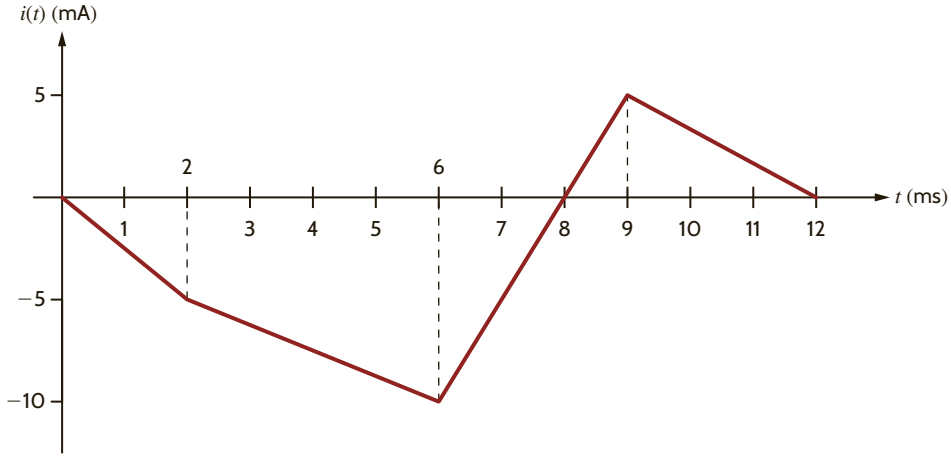

Figure E6.8

ANSWER:
25 μJ.

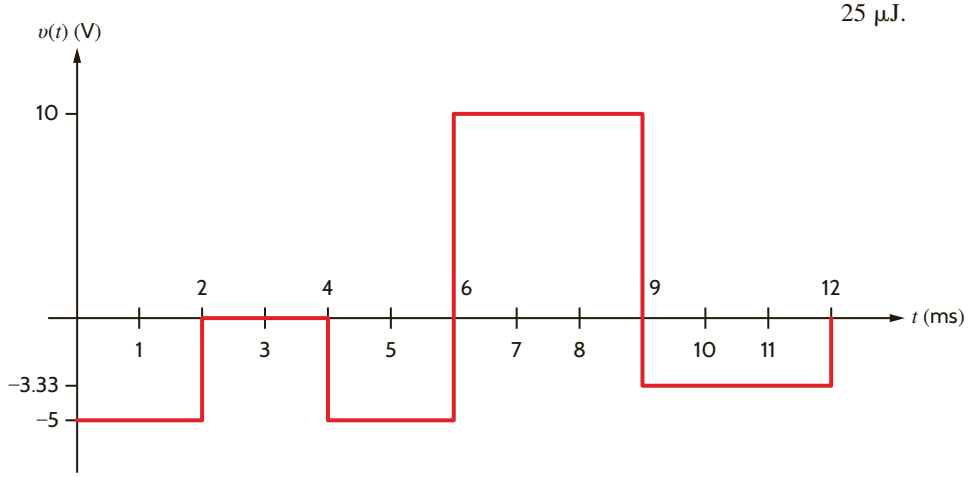

E6.9 The voltage across a 0.1-H inductor is shown in Fig. E6.9. Compute the waveform for the current in the inductor if $i(0) = 0.1$ A. How much energy is stored in the inductor at $t = 7$ ms?

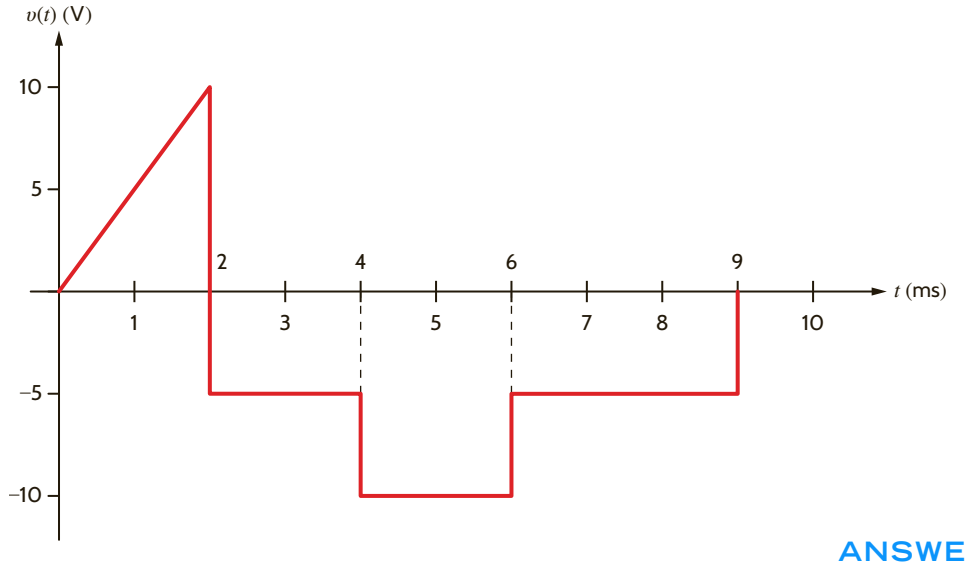

Figure E6.9

ANSWER:
1.125 mJ.

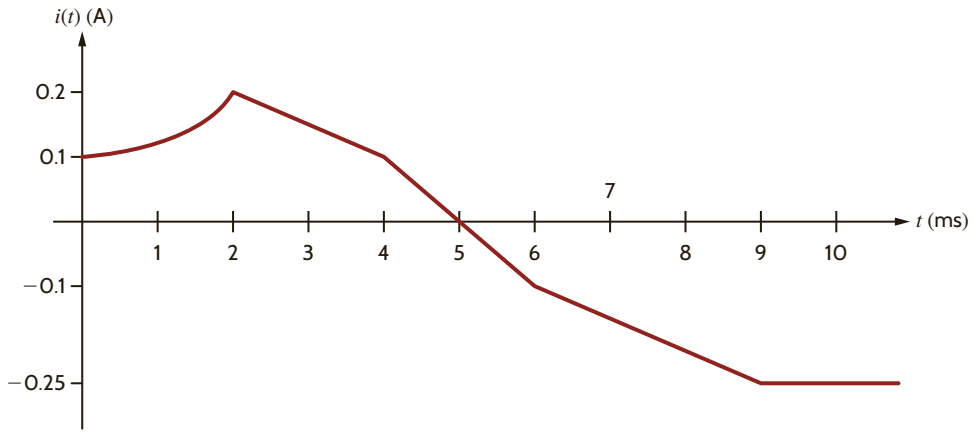

E6.10 Find the energy stored in the capacitor and inductor in Fig. E6.10.

ANSWER:
0.72 μJ; 0.5 μJ.

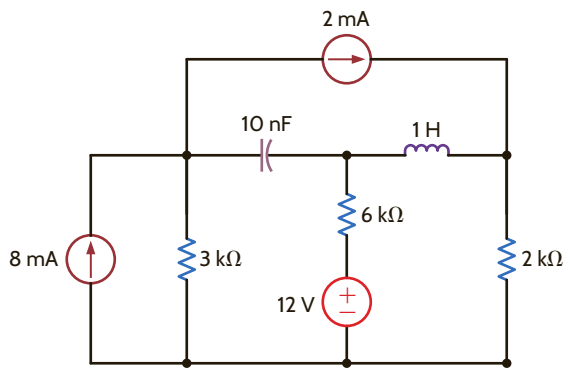

Figure E6.10

EXAMPLE 6.9

We wish to find the possible range of capacitance values for a 51-mF capacitor that has a tolerance of 20%.

SOLUTION

The minimum capacitor value is $0.8C = 40.8$ mF, and the maximum capacitor value is $1.2C = 61.2$ mF.

EXAMPLE 6.10

The capacitor in Fig. 6.11a is a 100-nF capacitor with a tolerance of 20%. If the voltage waveform is as shown in Fig. 6.11b, let us graph the current waveform for the minimum and maximum capacitor values.

SOLUTION

The maximum capacitor value is $1.2C = 120$ nF, and the minimum capacitor value is $0.8C = 80$ nF. The maximum and minimum capacitor currents, obtained from the equation

$$i(t) = C\frac{dv(t)}{dt}$$

are shown in Fig. 6.11c.

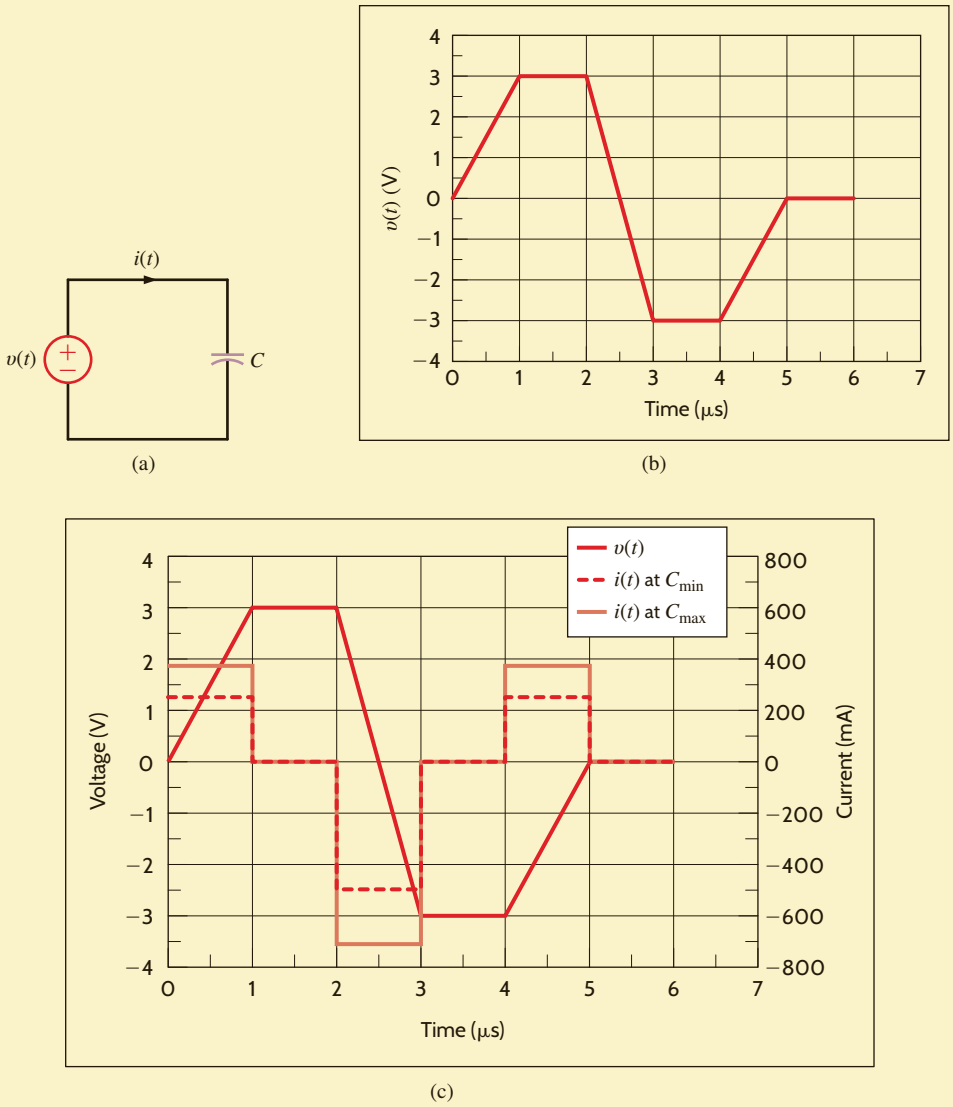

Figure 6.11

Circuit and graphs used in Example 6.10.

EXAMPLE 6.11

The inductor in Fig. 6.12a is a 100-μH inductor with a tolerance of 10%. If the current waveform is as shown in Fig. 6.12b, let us graph the voltage waveform for the minimum and maximum inductor values.

SOLUTION

The maximum inductor value is $1.1L = 110$ μH, and the minimum inductor value is $0.9L = 90$ μH. The maximum and minimum inductor voltages, obtained from the equation

$$v(t) = L\frac{di(t)}{dt}$$

are shown in Fig. 6.12c.

Figure 6.12
Circuit and graphs used in Example 6.11.

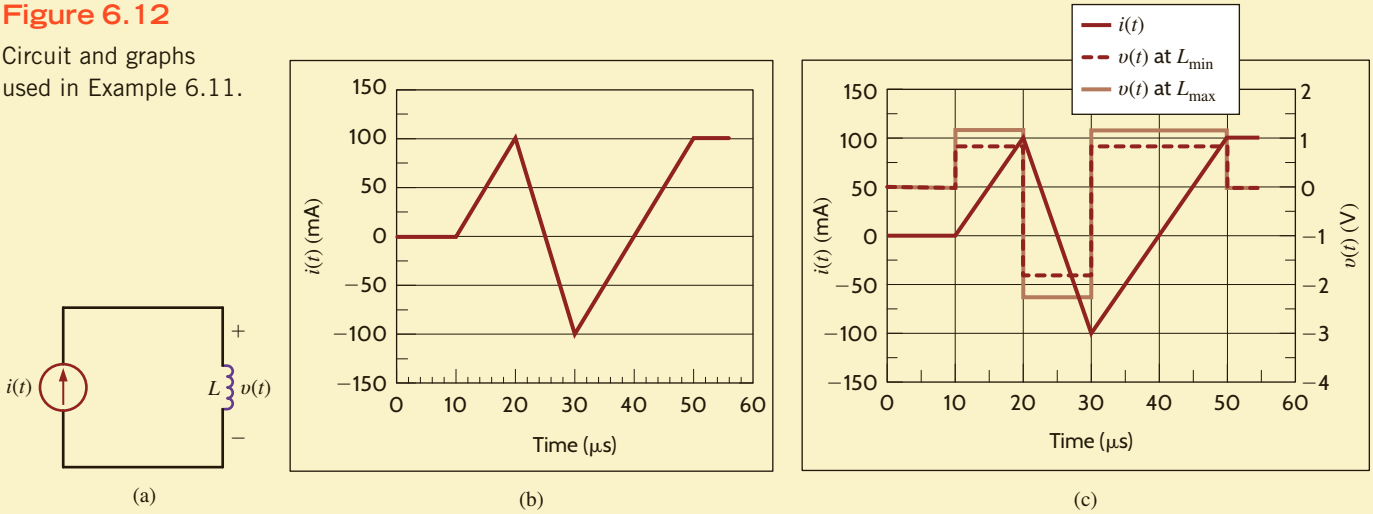

6.3 Capacitor and Inductor Combinations

SERIES CAPACITORS If a number of capacitors are connected in series, their equivalent capacitance can be calculated using KVL. Consider the circuit shown in **Fig. 6.13a**. For this circuit

$$v(t) = v_1(t) + v_2(t) + v_3(t) + \cdots + v_N(t) \tag{6.13}$$

but

$$v_i(t) = \frac{1}{C_i}\int_{t_0}^{t} i(t)dt + v_i(t_0) \tag{6.14}$$

Therefore, Eq. (6.13) can be written as follows using Eq. (6.14):

$$v(t) = \left(\sum_{i=1}^{N} \frac{1}{C_i}\right)\int_{t_0}^{t} i(t)dt + \sum_{i=1}^{N} v_i(t_0) \tag{6.15}$$

$$= \frac{1}{C_S}\int_{t_0}^{t} i(t)\,dt + v(t_0) \tag{6.16}$$

where

$$v(t_0) = \sum_{i=1}^{N} v_i(t_0)$$

and

$$\frac{1}{C_S} = \sum_{i=1}^{N} \frac{1}{C_i} = \frac{1}{C_1} + \frac{1}{C_2} + \cdots + \frac{1}{C_N} \tag{6.17}$$

HINT
Capacitors in series combine like resistors in parallel.

Thus, the circuit in **Fig. 6.13b** is equivalent to that in Fig. 6.13a under the conditions stated previously.

Figure 6.13
Equivalent circuit for N series-connected capacitors.

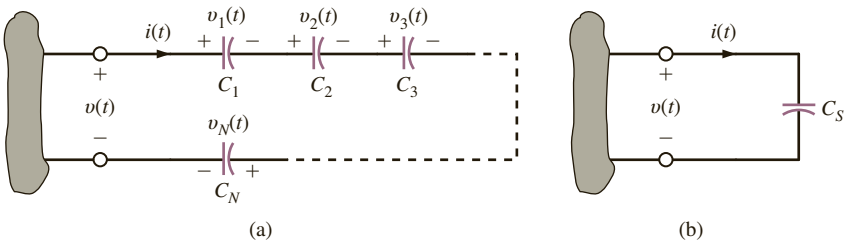

It is also important to note that since the same current flows in each of the series capacitors, each capacitor gains the same charge in the same time period. The voltage across each capacitor will depend on this charge and the capacitance of the element.

EXAMPLE 6.12

Determine the equivalent capacitance and the initial voltage for the circuit shown in Fig. 6.14.

SOLUTION

Note that these capacitors must have been charged before they were connected in series or else the charge of each would be equal and the voltages would be in the same direction.

The equivalent capacitance is

$$\frac{1}{C_S} = \frac{1}{2} + \frac{1}{3} + \frac{1}{6}$$

where all capacitance values are in microfarads.

Therefore, $C_S = 1\ \mu\text{F}$ and, as seen from the figure, $v(t_0) = -3$ V. Note that the total energy stored in the circuit is

$$w(t_0) = \frac{1}{2}[2 \times 10^{-6}(2)^2 + 3 \times 10^{-6}(-4)^2 + 6 \times 10^{-6}(-1)^2]$$
$$= 31\ \mu\text{J}$$

However, the energy recoverable at the terminals is

$$w_C(t_0) = \frac{1}{2} C_S v^2(t)$$
$$= \frac{1}{2}[1 \times 10^{-6}(-3)^2]$$
$$= 4.5\ \mu\text{J}$$

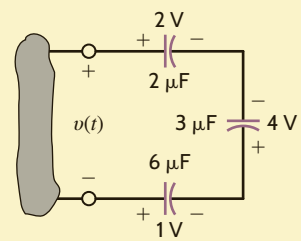

Figure 6.14
Circuit containing multiple capacitors with initial voltages.

EXAMPLE 6.13

Two previously uncharged capacitors are connected in series and then charged with a 12-V source. One capacitor is 30 μF and the other is unknown. If the voltage across the 30-μF capacitor is 8 V, find the capacitance of the unknown capacitor.

SOLUTION

The charge on the 30-μF capacitor is

$$Q = CV = (30\ \mu\text{F})(8\ \text{V}) = 240\ \mu\text{C}$$

Since the same current flows in each of the series capacitors, each capacitor gains the same charge in the same time period:

$$C = \frac{Q}{V} = \frac{240\ \mu\text{C}}{4\ \text{V}} = 60\ \mu\text{F}$$

PARALLEL CAPACITORS To determine the equivalent capacitance of N capacitors connected in parallel, we employ KCL. As can be seen from Fig. 6.15a,

$$i(t) = i_1(t) + i_2(t) + i_3(t) + \cdots + i_N(t) \qquad \textbf{6.18}$$
$$= C_1\frac{dv(t)}{dt} + C_2\frac{dv(t)}{dt} + C_3\frac{dv(t)}{dt} + \cdots + C_N\frac{dv(t)}{dt}$$
$$= \left(\sum_{i=1}^{N} C_i\right)\frac{dv(t)}{dt}$$
$$= C_p\frac{dv(t)}{dt} \qquad \textbf{6.19}$$

Figure 6.15
Equivalent circuit for N capacitors connected in parallel.

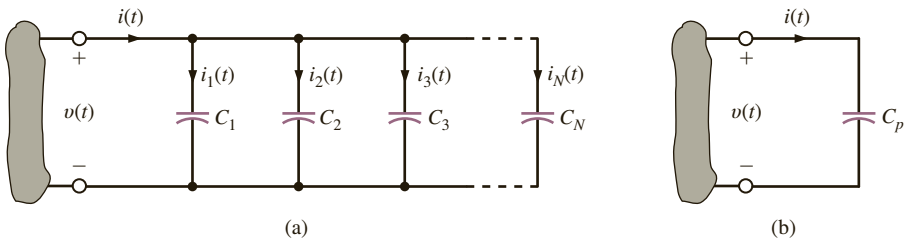

HINT
Capacitors in parallel combine like resistors in series.

where

$$C_p = C_1 + C_2 + C_3 + \cdots + C_N \qquad \textbf{6.20}$$

EXAMPLE 6.14

Determine the equivalent capacitance at terminals A-B of the circuit shown in Fig. 6.16.

SOLUTION

$$C_p = 15\ \mu\text{F}$$

Figure 6.16
Circuit containing multiple capacitors in parallel.

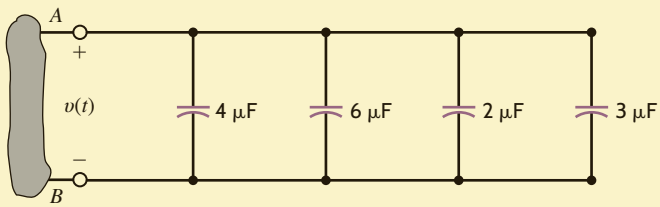

LEARNING ASSESSMENTS

E6.11 Two initially uncharged capacitors are connected as shown in Fig. E6.11. After a period of time, the voltage reaches the value shown. Determine the value of C_1.

ANSWER:
4 μF.

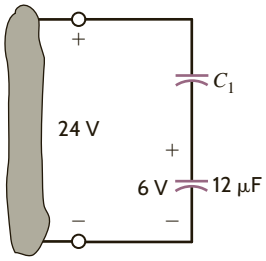

Figure E6.11

E6.12 Compute the equivalent capacitance of the network in Fig. E6.12.

ANSWER:
1.5 μF.

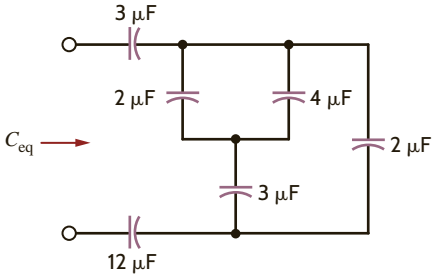

Figure E6.12

E6.13 Determine C_T in Fig. E6.13.

ANSWER:
1.667 μF.

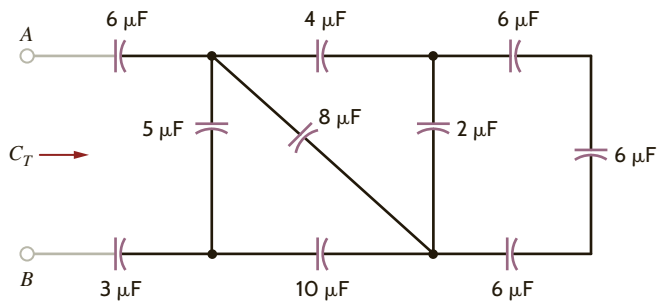

Figure E6.13

SERIES INDUCTORS If N inductors are connected in series, the equivalent inductance of the combination can be determined as follows. Referring to **Fig. 6.17a** and using KVL, we see that

$$v(t) = v_1(t) + v_2(t) + v_3(t) + \cdots + v_N(t) \qquad \textbf{6.21}$$

and therefore,

$$v(t) = L_1\frac{di(t)}{dt} + L_2\frac{di(t)}{dt} + L_3\frac{di(t)}{dt} + \cdots + L_N\frac{di(t)}{dt} \qquad \textbf{6.22}$$

$$= \left(\sum_{i=1}^{N} L_i\right)\frac{di(t)}{dt}$$

$$= L_S\frac{di(t)}{dt} \qquad \textbf{6.23}$$

where

$$L_S = \sum_{i=1}^{N} L_i = L_1 + L_2 + \cdots + L_N \qquad \textbf{6.24}$$

Therefore, under this condition the network in **Fig. 6.17b** is equivalent to that in Fig. 6.17a.

HINT
Inductors in series combine like resistors in series.

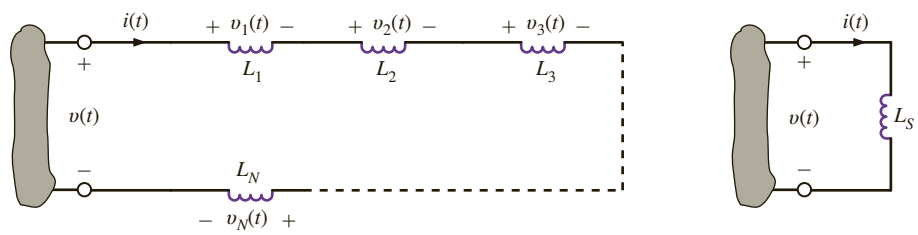

Figure 6.17
Equivalent circuit for N series-connected inductors.

EXAMPLE 6.15

Find the equivalent inductance of the circuit shown in **Fig. 6.18**.

SOLUTION

The equivalent inductance of the circuit shown in Fig. 6.18 is

$$L_S = 1\text{ H} + 2\text{ H} + 4\text{ H}$$
$$= 7\text{ H}$$

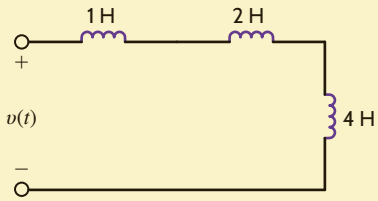

Figure 6.18
Circuit containing multiple inductors.

PARALLEL INDUCTORS Consider the circuit shown in **Fig. 6.19a**, which contains N parallel inductors. Using KCL, we can write

$$i(t) = i_1(t) + i_2(t) + i_3(t) + \cdots + i_N(t) \tag{6.25}$$

However,

$$i_j(t) = \frac{1}{L_j}\int_{t_0}^{t} v(x)dx + i_j(t_0) \tag{6.26}$$

Substituting this expression into Eq. (6.25) yields

$$i(t) = \left(\sum_{j=1}^{N}\frac{1}{L_j}\right)\int_{t_0}^{t} v(x)dx + \sum_{j=1}^{N} i_j(t_0) \tag{6.27}$$

$$= \frac{1}{L_p}\int_{t_0}^{t} v(x)dx + i(t_0) \tag{6.28}$$

where

$$\frac{1}{L_p} = \frac{1}{L_1} + \frac{1}{L_2} + \frac{1}{L_3} + \cdots + \frac{1}{L_N} \tag{6.29}$$

HINT
Inductors in parallel combine like resistors in parallel.

and $i(t_0)$ is equal to the current in L_p at $t = t_0$. Thus, the circuit in **Fig. 6.19b** is equivalent to that in Fig. 6.19a under the conditions stated previously.

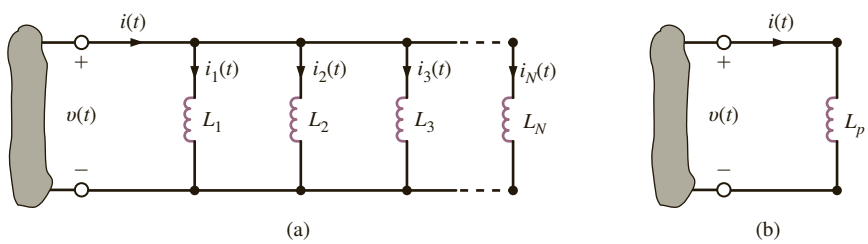

Figure 6.19
Equivalent circuit for N inductors connected in parallel.

EXAMPLE 6.16

Determine the equivalent inductance and the initial current for the circuit shown in **Fig. 6.20**.

SOLUTION

The equivalent inductance is

$$\frac{1}{L_p} = \frac{1}{12} + \frac{1}{6} + \frac{1}{4}$$

where all inductance values are in millihenrys:

$$L_p = 2 \text{ mH}$$

and the initial current is $i(t_0) = -1$ A.

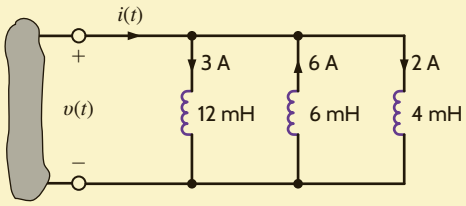

Figure 6.20
Circuit containing multiple inductors with initial currents.

The previous material indicates that capacitors combine like conductances, whereas inductances combine like resistances.

LEARNING ASSESSMENTS

E6.14 Determine the equivalent inductance of the network in Fig. E6.14 if all inductors are 6 mH.

ANSWER: 9.429 mH.

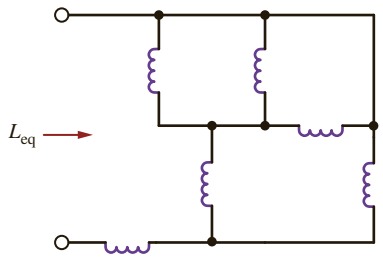

Figure E6.14

E6.15 Find L_T in Fig. E6.15.

ANSWER: 5 mH.

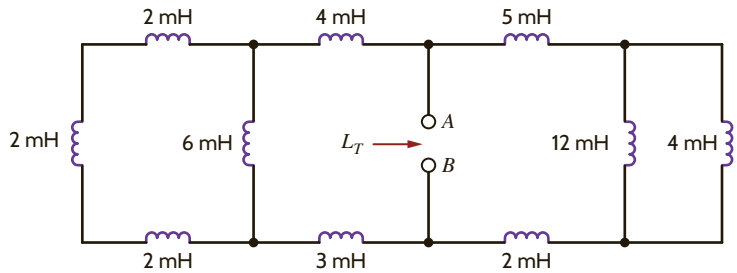

Figure E6.15

SUMMARY

- The important (dual) relationships for capacitors and inductors are as follows:

$$q = Cv$$

$$i(t) = C\frac{dv(t)}{dt} \qquad v(t) = L\frac{di(t)}{dt}$$

$$v(t) = \frac{1}{C}\int_{-\infty}^{t} i(x)\,dx \qquad i(t) = \frac{1}{L}\int_{-\infty}^{t} v(x)\,dx$$

$$p(t) = Cv(t)\frac{dv(t)}{dt} \qquad p(t) = Li(t)\frac{di(t)}{dt}$$

$$w_C(t) = \frac{1}{2}Cv^2(t) \qquad w_L(t) = \frac{1}{2}Li^2(t)$$

- The passive sign convention is used with capacitors and inductors.
- In dc steady state, a capacitor looks like an open circuit and an inductor looks like a short circuit.
- The voltage across a capacitor and the current flowing through an inductor cannot change instantaneously.
- When inductors are interconnected, their equivalent inductance is determined as follows: inductors in series combine like resistors in series, and inductors in parallel combine like resistors in parallel.
- When capacitors are interconnected, their equivalent capacitance is determined as follows: capacitors in series combine like resistors in parallel, and capacitors in parallel combine like resistors in series.

PROBLEMS

6.1 An uncharged 100-μF capacitor is charged by a constant current of 1 mA. Find the voltage across the capacitor after 4 s.

6.2 A capacitor has an accumulated charge of 600 μC with 5 V across it. What is the value of capacitance?

6.3 The energy that is stored in a 25-μF capacitor is $w(t) = 12 \sin^2 377t$ J. Find the current in the capacitor.

6.4 The current in a 100-μF capacitor is shown in Fig. P6.4. Determine the waveform for the voltage across the capacitor if it is initially uncharged.

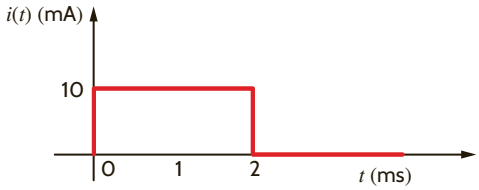

Figure P6.4

6.5 The voltage across a 50-μF capacitor is shown in Fig. P6.5. Determine the current waveform.

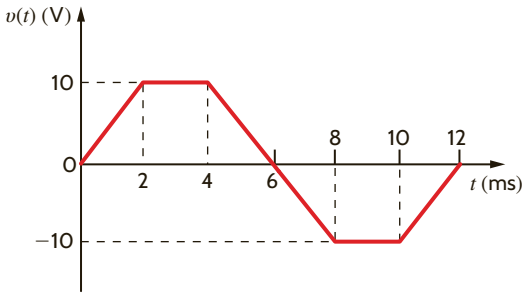

Figure P6.5

6.6 Draw the waveform for the current in a 12-μF capacitor when the capacitor voltage is as described in Fig. P6.6.

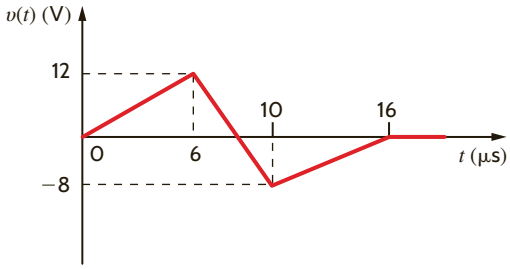

Figure P6.6

6.7 The voltage across a 10-μF capacitor is shown in Fig. P6.7. Determine the waveform for the current in the capacitor.

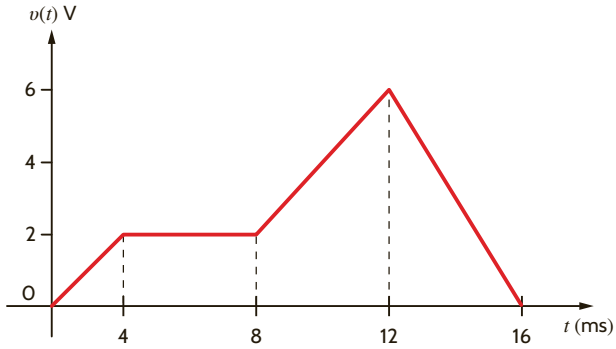

Figure P6.7

6.8 If the voltage waveform across a 100-μF capacitor is shown in Fig. P6.8, determine the waveform for the current.

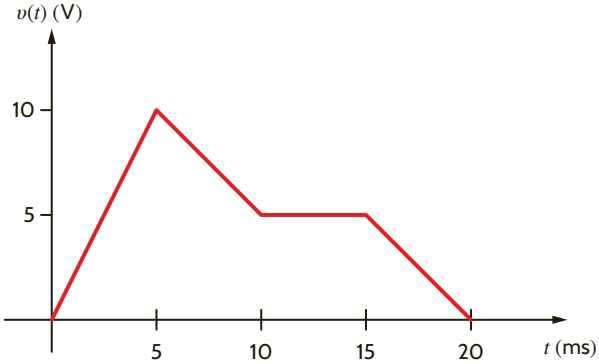

Figure P6.8

6.9 The voltage across a 25-μF capacitor is shown in Fig. P6.9. Determine the current waveform.

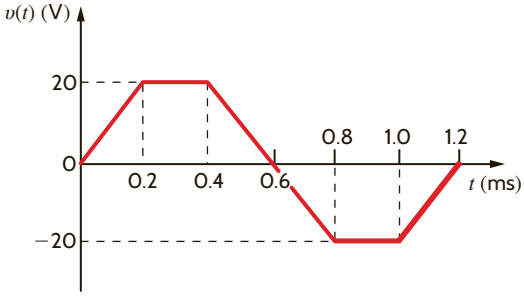

Figure P6.9

6.10 The voltage across a 2-F capacitor is given by the waveform in Fig. P6.10. Find the waveform for the current in the capacitor.

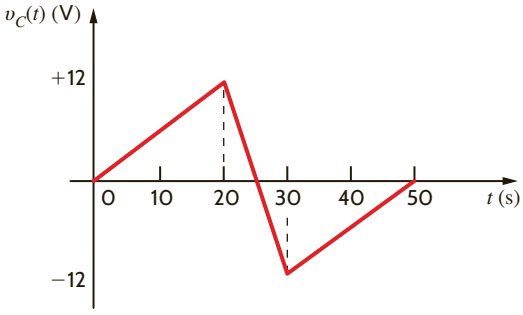

Figure P6.10

6.11 The voltage across a 2-μF capacitor is given by the waveform in Fig. P6.11. Compute the current waveform.

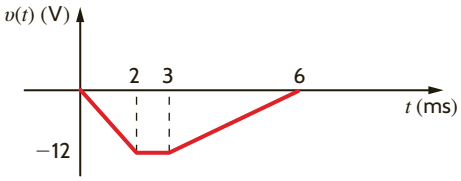

Figure P6.11

6.12 Draw the waveform for the current in a 24-μF capacitor when the capacitor voltage is as described in Fig. P6.12.

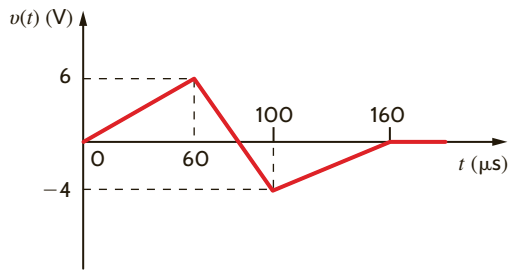

Figure P6.12

6.13 The waveform for the current in a 50-μF capacitor is shown in Fig. P6.13. Determine the waveform for the capacitor voltage.

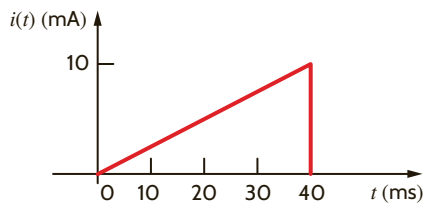

Figure P6.13

6.14 The waveform for the current flowing through the 10-μF capacitor in Fig. P6.14a is shown in Fig. P6.14b. If $v_c(t = 0) = 1$ V, determine $v_c(t)$ at $t = 1$ ms, 3 ms, 4 ms, and 5 ms.

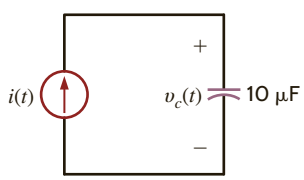

(a)

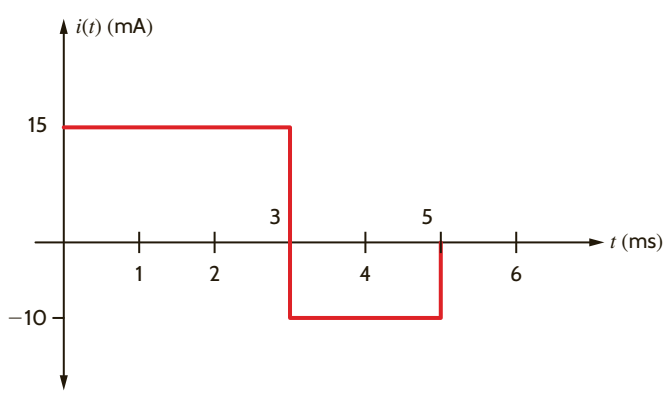

(b)

Figure P6.14

6.15 The waveform for the current in a 50-μF initially uncharged capacitor is shown in Fig. P6.15. Determine the waveform for the capacitor's voltage.

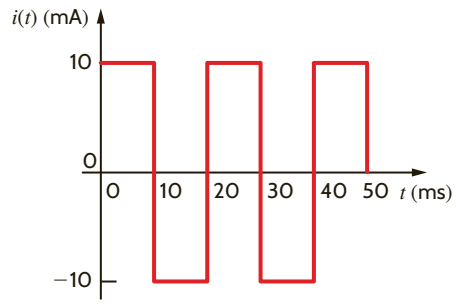

Figure P6.15

6.16 The voltage across a 10-μF capacitor is given by the waveform in Fig. P6.16. Plot the waveform for the capacitor current.

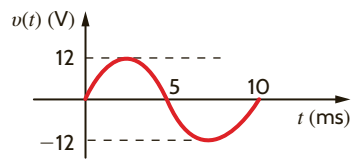

Figure P6.16

6.17 If $v_c(t = 2 \text{ s}) = 10$ V in the circuit in Fig. P6.17, find the energy stored in the capacitor and the power supplied by the source at $t = 6$ s.

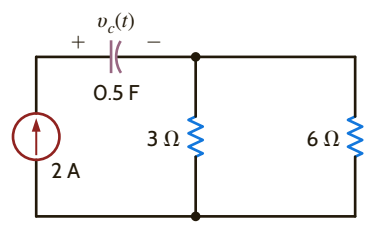

Figure P6.17

6.18 The current in an inductor changed from 0 to 200 mA in 4 ms and induces a voltage of 100 mV. What is the value of the inductor?

6.19 The current in a 100-mH inductor is $i(t) = 2 \sin 377t$ A. Find (a) the voltage across the inductor and (b) the expression for the energy stored in the element.

6.20 The current in a 50-mH inductor is specified as follows:

$$i(t) = 0 \qquad t < 0$$
$$i(t) = 2te^{-4t} \text{ A} \qquad t > 0$$

Find (a) the voltage across the inductor, (b) the time at which the current is a maximum, and (c) the time at which the voltage is a minimum.

6.21 The current in a 25-mH inductor is given by the expressions

$$i(t) = 0 \qquad t < 0$$
$$i(t) = 10(1 - e^{-t}) \text{ mA} \qquad t > 0$$

Find (a) the voltage across the inductor and (b) the expression for the energy stored in it.

6.22 Given the data in the previous problem, find the voltage across the inductor and the energy stored in it after 1 s.

6.23 The voltage across a 2-H inductor is given by the waveform shown in Fig. P6.23. Find the waveform for the current in the inductor.

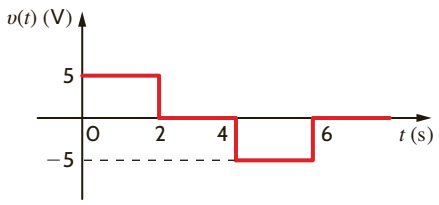

Figure P6.23

6.24 The voltage across a 4-H inductor is given by the waveform shown in Fig. P6.24. Find the waveform for the current in the inductor $v(t) = 0$, $t < 0$.

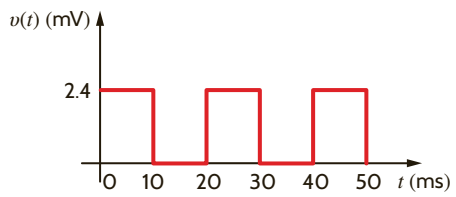

Figure P6.24

6.25 The voltage across a 10-mH inductor is shown in Fig. P6.25. Determine the waveform for the inductor current.

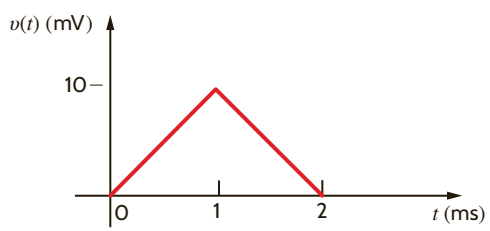

Figure P6.25

6.26 If the current $i(t) = 1.5t$ A flows through a 2-H inductor, find the energy stored at $t = 2$ s.

6.27 The current in a 30-mH inductor is shown in Fig. P6.27. Derive the waveform for the inductor voltage.

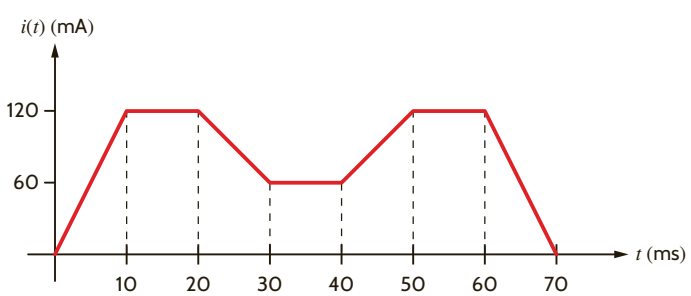

Figure P6.27

6.28 The current waveform in a 40-mH inductor is shown in Fig. P6.28. Derive the waveform for the inductor voltage.

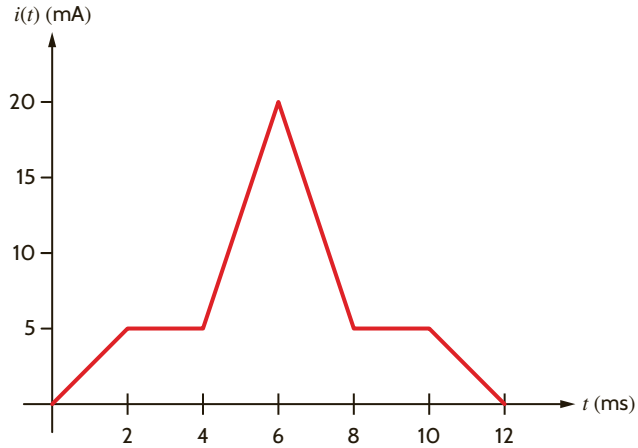

Figure P6.28

6.29 The waveform for the current flowing through a 0.5-H inductor is shown in the plot in Fig. P6.29. Accurately sketch the inductor voltage versus time. Determine the following quantities: (a) the energy stored in the inductor at $t = 1.7$ ms, (b) the energy stored in the inductor at $t = 4.2$ ms, and (c) the power absorbed by the inductor at $t = 1.2$ ms, $t = 2.8$ ms, and $t = 5.3$ ms.

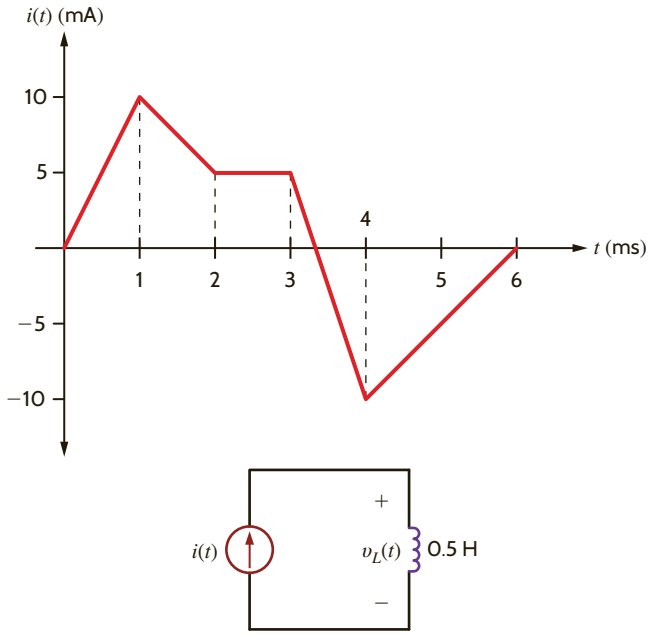

Figure P6.29

6.30 The current in a 50-mH inductor is given in Fig. P6.30. Sketch the inductor voltage.

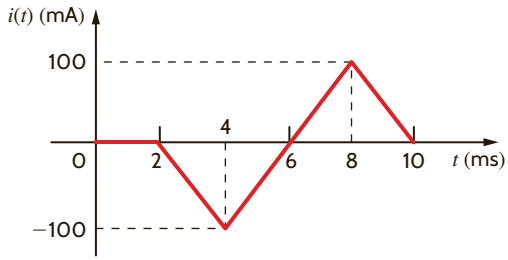

Figure P6.30

6.31 The current in a 24-mH inductor is given by the waveform in Fig. P6.31. Find the waveform for the voltage across the inductor.

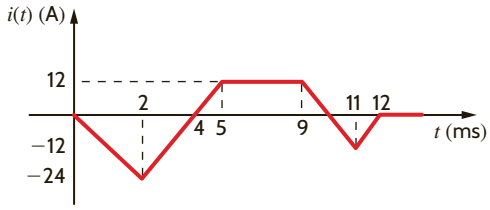

Figure P6.31

6.32 The current in a 10-mH inductor is shown in Fig. P6.32. Determine the waveform for the voltage across the inductor.

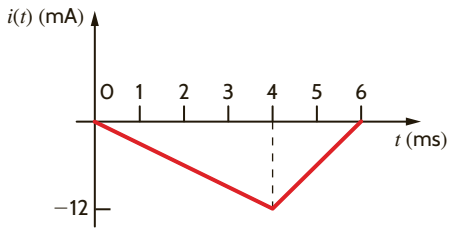

Figure P6.32

6.33 The current in a 50-mH inductor is shown in Fig. P6.33. Find the voltage across the inductor.

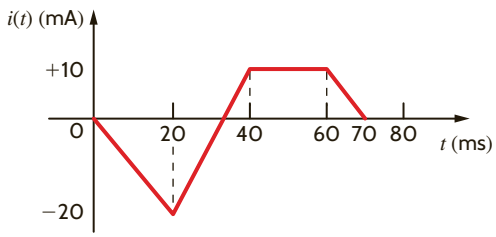

Figure P6.33

6.34 Draw the waveform for the voltage across a 24-mH inductor when the inductor current is given by the waveform shown in Fig. P6.34.

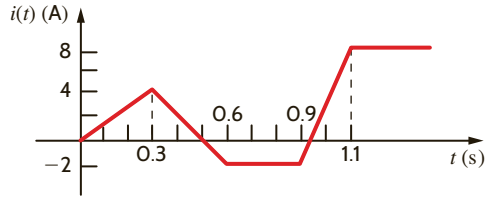

Figure P6.34

6.35 The current in a 4-mH inductor is given by the waveform in Fig. P6.35. Plot the voltage across the inductor.

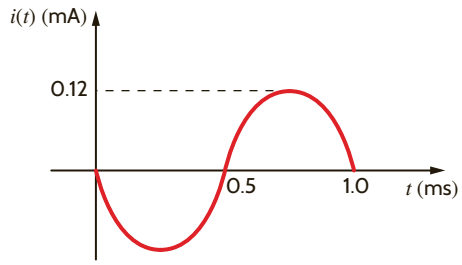

Figure P6.35

6.36 The waveform for the current in the 2-H inductor shown in Fig. P6.36a is given in Fig. P6.36b. Determine the following quantities: (a) the energy stored in the inductor at $t = 1.5$ ms, (b) the energy stored in the inductor at $t = 7.5$ ms, (c) $v_L(t)$ at $t = 1.5$ ms, (d) $v_L(t)$at $t = 6.25$ ms, and (e) $v_L(t)$ at $t = 2.75$ ms.

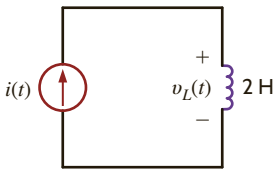

(a)

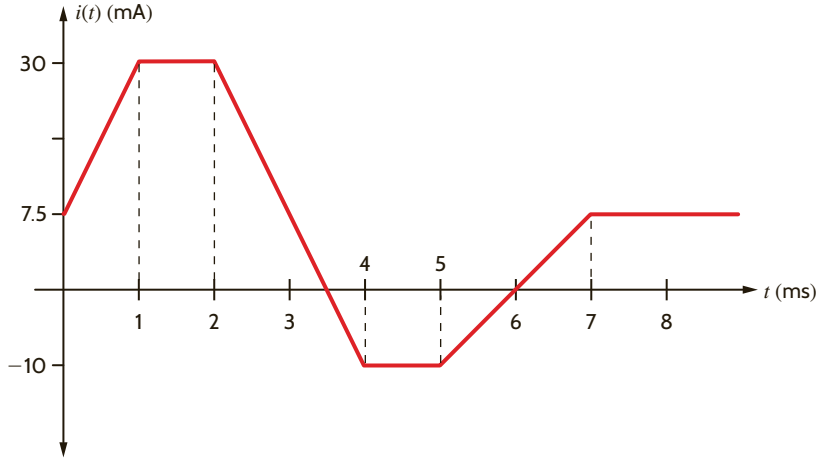

(b)

Figure P6.36

6.37 If the total energy stored in the circuit in Fig. P6.37 is 80 mJ, what is the value of L?

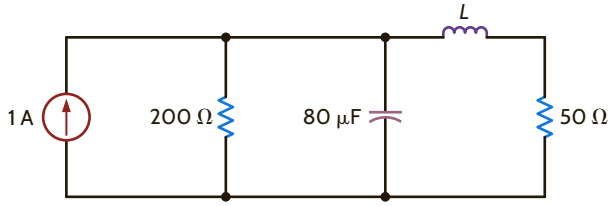

Figure P6.37

6.38 Find the value of C if the energy stored in the capacitor in Fig. P6.38 equals the energy stored in the inductor.

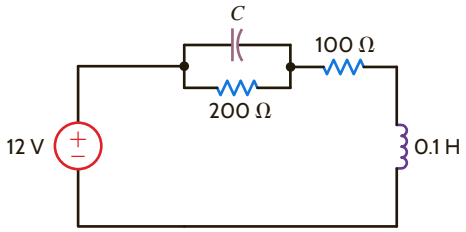

Figure P6.38

6.39 What values of capacitance can be obtained by interconnecting a 4-μF capacitor, a 6-μF capacitor, and a 12-μF capacitor?

6.40 Given four 2-μF capacitors, find the maximum value and minimum value that can be obtained by interconnecting the capacitors in series/parallel combinations.

6.41 Determine the values of inductance that can be obtained by interconnecting a 4-mH inductor, a 6-mH inductor, and a 12-mH inductor.

6.42 Given four 4-mH inductors, determine the maximum and minimum values of inductance that can be obtained by interconnecting the inductors in series/parallel combinations.

6.43 Given a 6-, 9-, and 18-mH inductor, can they be interconnected to obtain an equivalent 12-mH inductor?

6.44 Given the network in Fig. P6.44, find the power dissipated in the 3-Ω resistor and the energy stored in the capacitor.

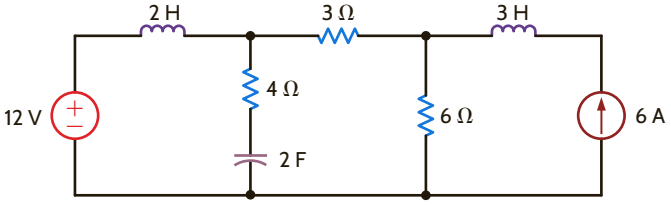

Figure P6.44

6.45 Find the total capacitance C_T in the network in Fig. P6.45. All capacitors are in microfarads.

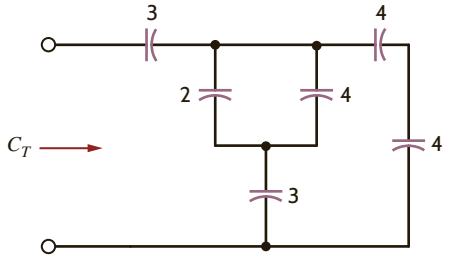

Figure P6.45

6.46 Find the total capacitance C_T in the network in Fig. P6.46. All capacitors are in microfarads.

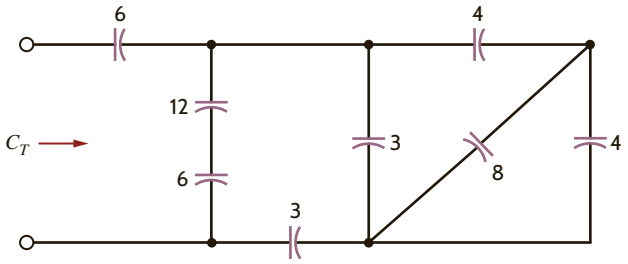

Figure P6.46

6.47 Find the total capacitance C_T of the network in Fig. P6.47.

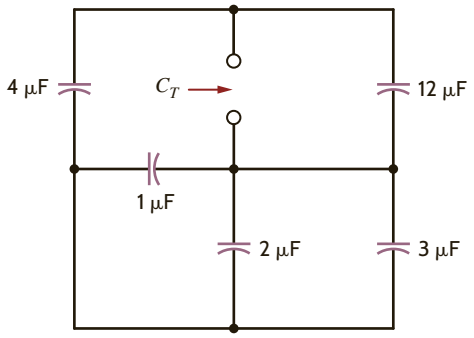

Figure P6.47

6.48 Find C_T in the network shown in Fig. P6.48.

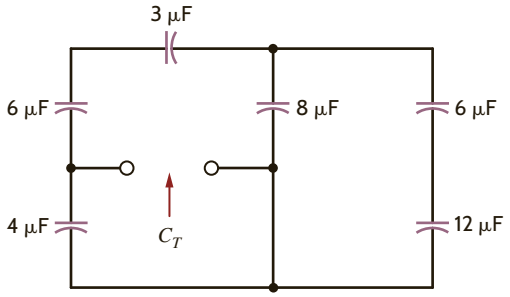

Figure P6.48

6.49 Determine the value of C_T in the circuit in Fig. P6.49.

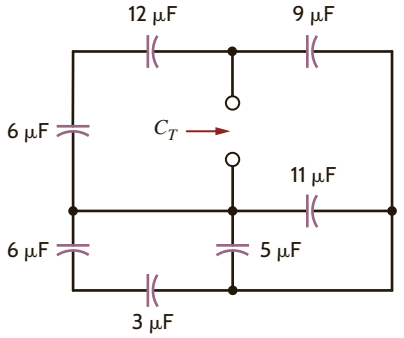

Figure P6.49

6.50 Find C_T in the network in Fig. P6.50.

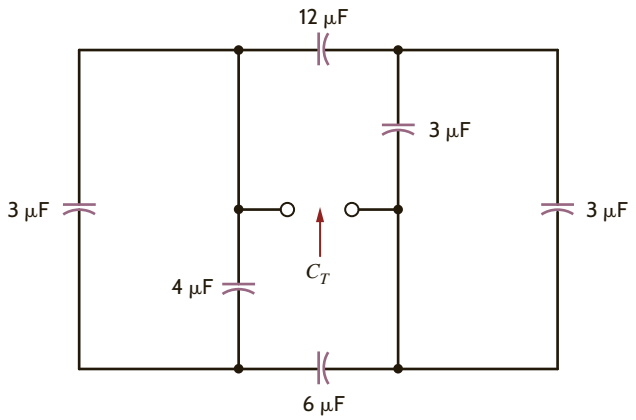

Figure P6.50

6.51 Find the total capacitance C_T in the network in Fig. P6.51. All capacitors are in microfarads.

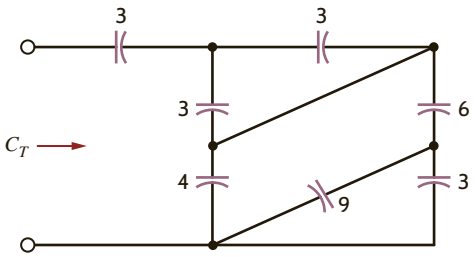

Figure P6.51

6.52 Find the total capacitance C_T shown in the network in Fig. P6.52.

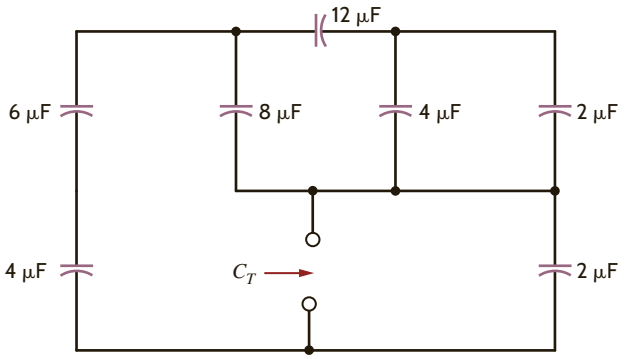

Figure P6.52

6.53 Find the total capacitance C_T of the network in Fig. P6.53.

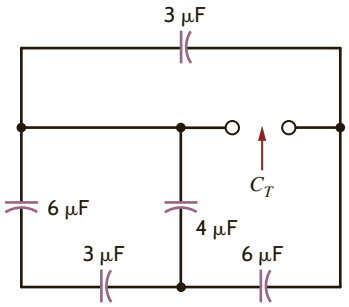

Figure P6.53

6.54 Find the total capacitance C_T shown in the network in Fig. P6.54.

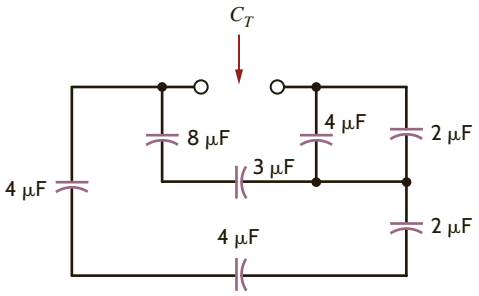

Figure P6.54

6.55 In the network in Fig. P6.55, find the capacitance C_T if (a) the switch is open and (b) the switch is closed.

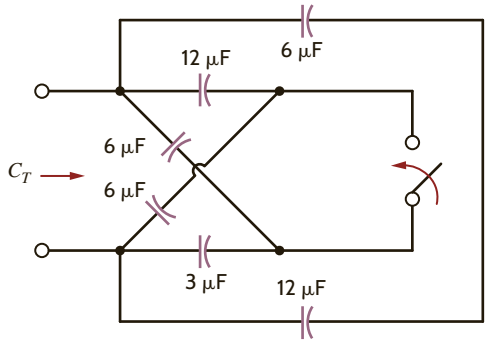

Figure P6.55

6.56 Find the total capacitance C_T in the network in Fig. P6.56. All capacitors are 12 microfarads.

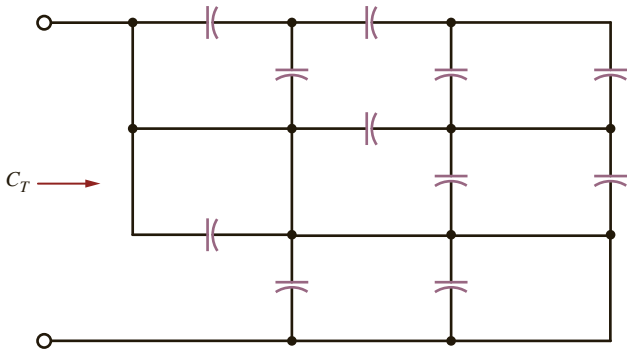

Figure P6.56

6.57 If the total capacitance of the network in Fig. P6.57 is 10 μF, find the value of C.

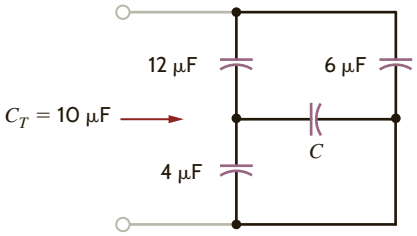

Figure P6.57

6.58 Find the value of C in Fig. P6.58.

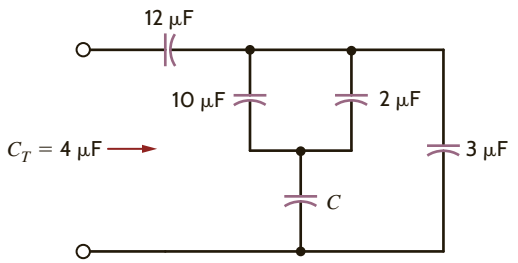

Figure P6.58

6.59 Given a 1-, 3-, and 4-μF capacitor, can they be interconnected to obtain an equivalent 2-μF capacitor?

6.60 Select the value of C to produce the desired total capacitance of $C_T = 10$ μF in the circuit in Fig. P6.60.

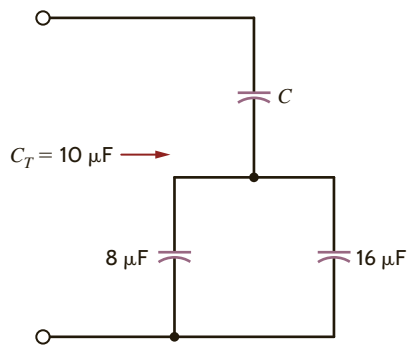

Figure P6.60

6.61 Select the value of C to produce the desired total capacitance of $C_T = 1$ μF in the circuit in Fig. P6.61.

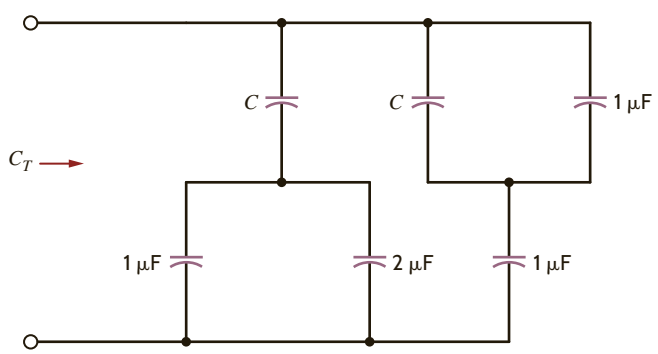

Figure P6.61

6.62 The three capacitors shown in Fig. P6.62 have been connected for some time and have reached their present values. Find V_1 and V_2.

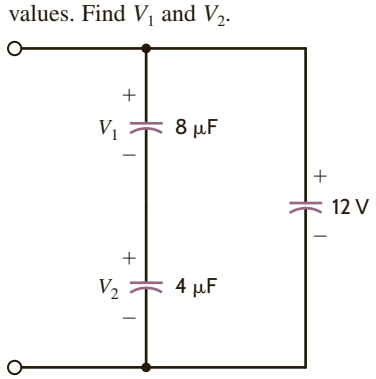

Figure P6.62

6.63 The two capacitors in Fig. P6.63 were charged and then connected as shown. Determine the equivalent capacitance, the initial voltage at the terminals, and the total energy stored in the network.

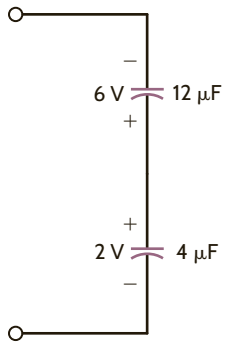

Figure P6.63

6.64 The two capacitors shown in Fig. P6.64 have been connected for some time and have reached their present values. Find V_o.

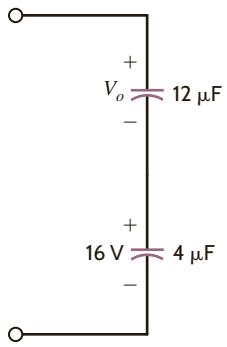

Figure P6.64

6.65 Determine the inductance at terminals A-B in the network in Fig. P6.65.

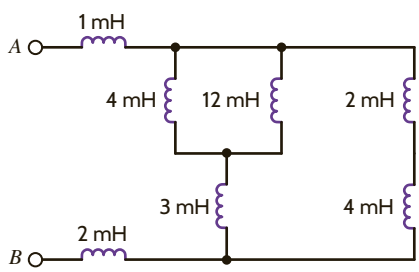

Figure P6.65

6.66 Find the total inductance, L_T, in the network in Fig. P6.66. All inductors are in millihenrys.

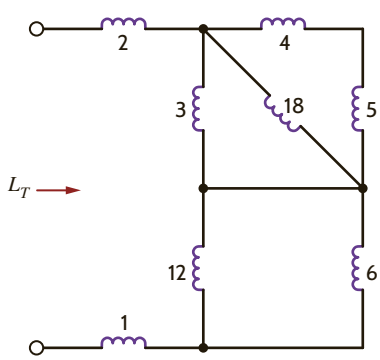

Figure P6.66

6.67 Find the total inductance, L_T, in the network in Fig. P6.67. All inductors are in millihenrys.

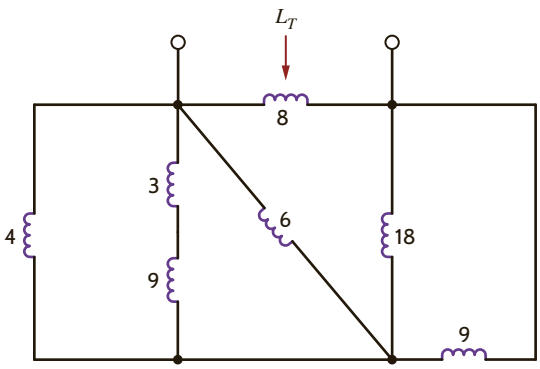

Figure P6.67

6.68 Find the total inductance, L_T, in the network in Fig. P6.68. All inductors are in millihenrys.

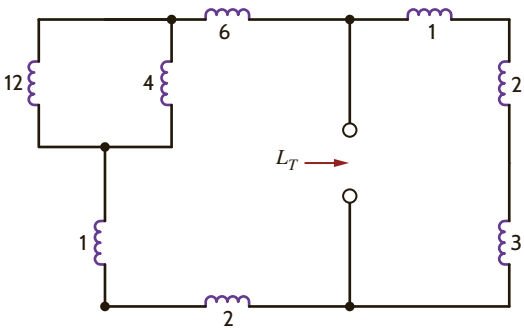

Figure P6.68

6.69 Find the total inductance L_T in the network in Fig. P6.69. All inductors are in millihenrys.

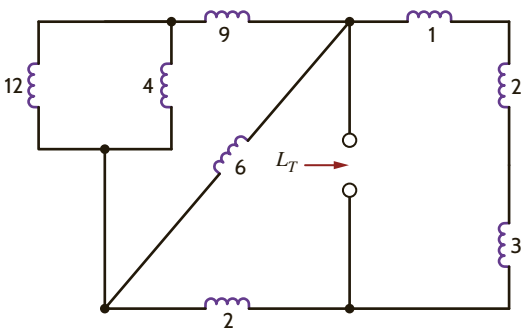

Figure P6.69

6.70 Find the total inductance at the terminals of the network in Fig. P6.70.

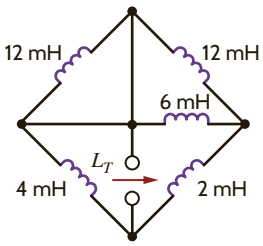

Figure P6.70

6.71 Find L_T in the circuit in Fig. P6.71.

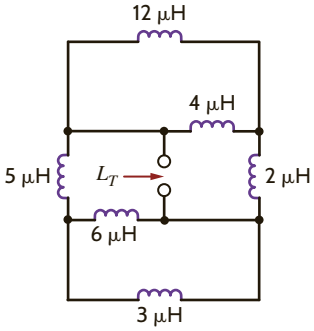

Figure P6.71

6.72 Find L_T in the network in Fig. P6.72 (a) with the switch open and (b) with the switch closed. All inductors are 12 mH.

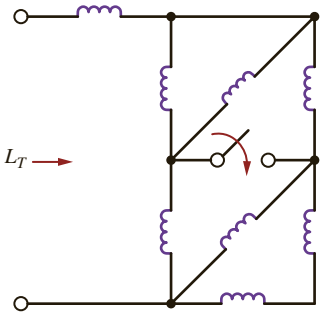

Figure P6.72

6.73 Determine the inductance at terminals A-B in the network in Fig. P6.73.

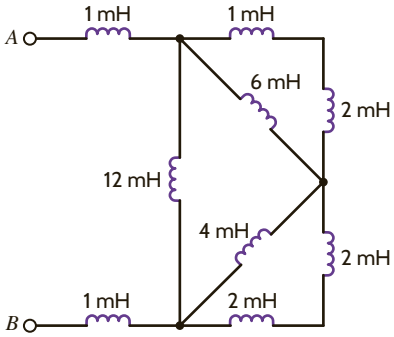

Figure P6.73

6.74 Compute the equivalent inductance of the network in Fig. P6.74 if all inductors are 4 mH.

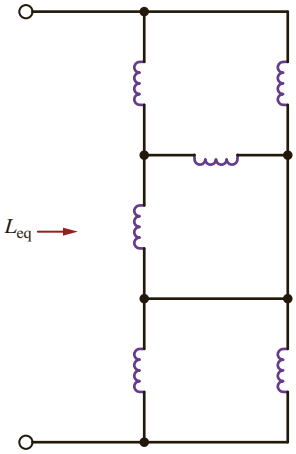

Figure P6.74

6.75 Find the value of L in the network in Fig. P6.75 so that the value of L_T will be 2 mH.

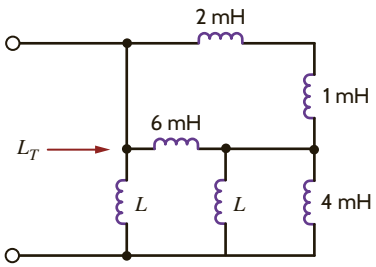

Figure P6.75

6.76 Find L_T in the circuit in Fig. P6.76. All inductors are 12 μH.

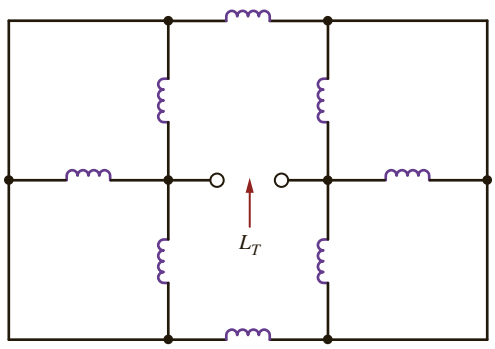

Figure P6.76

6.77 Find the total inductance, L_T, in the network in Fig. P6.77. All inductors are 6 millihenrys.

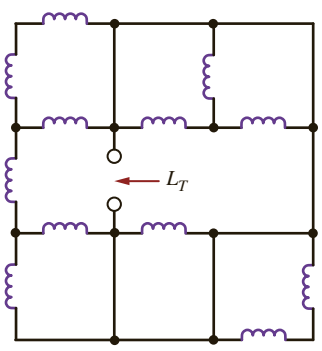

Figure P6.77

6.78 Find L_T in the circuit in Fig. P6.78.

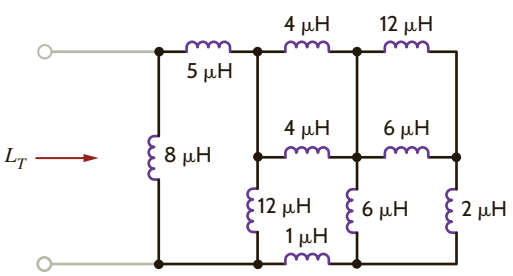

Figure P6.78

6.79 Find L_T in the circuit in Fig. P6.79.

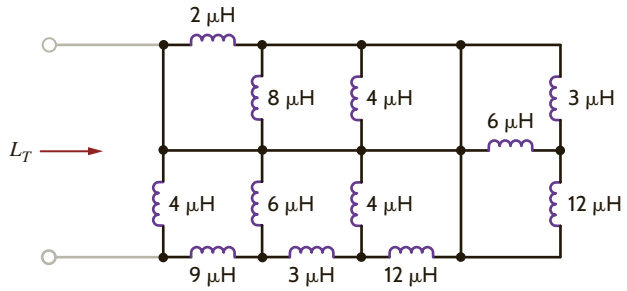

Figure P6.79

6.80 If the total inductance, L_T, of the network in Fig. P6.80 is 6 μH, find the value of L.

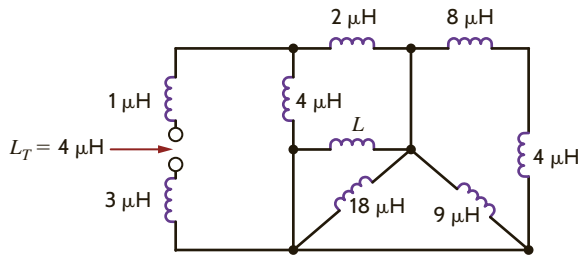

Figure P6.80

6.81 Given the network shown in Fig. P6.81, find (a) the equivalent inductance at terminals A-B with terminals C-D short circuited, and (b) the equivalent inductance at terminals C-D with terminals A-B open circuited.

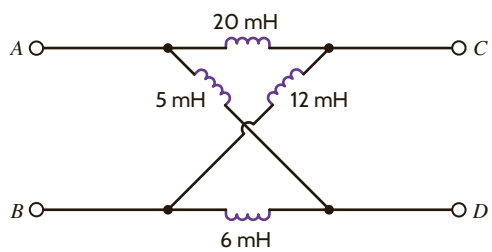

Figure P6.81

6.82 Find the value of L in the network in Fig. P6.82 so that the total inductance, L_T, will be 2 mH.

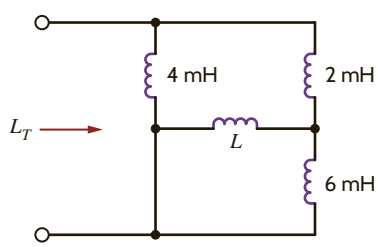

Figure P6.82

6.83 A 20-mH inductor and a 12-mH inductor are connected in series with a 1-A current source. Find (a) the equivalent inductance and (b) the total energy stored.

TYPICAL PROBLEMS FOUND ON THE FE EXAM

6PFE-1 Given three capacitors with values of 2 μF, 4 μF, and 6 μF, can the capacitors be interconnected so that the combination is an equivalent 3-μF capacitor?

a. Yes. The capacitors should be connected as shown.

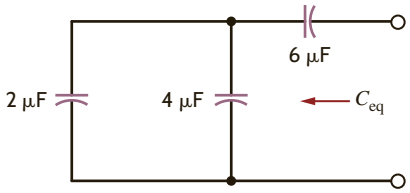

b. Yes. The capacitors should be connected as shown.

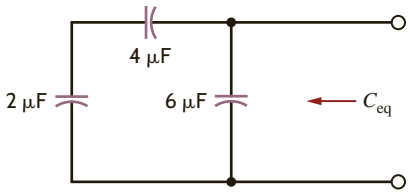

c. Yes. The capacitors should be connected as shown.

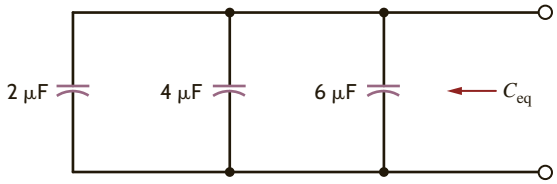

d. No. An equivalent capacitance of 3 μF is not possible with the given capacitors.

6PFE-2 The current pulse shown in Fig. 6PFE-2 is applied to a 1-μF capacitor. What is the energy stored in the electric field of the capacitor?

a. $w(t) = \begin{cases} 0 \text{ J}, t \le 0 \\ 10 \times 10^6 t^2 \text{ J}, 0 < t \le 1 \ \mu\text{s} \\ 10 \ \mu\text{J}, t > 1 \ \mu\text{s} \end{cases}$

b. $w(t) = \begin{cases} 0 \text{ J}, t \le 0 \\ 6 \times 10^6 t \text{ J}, 0 < t \le 1 \ \mu\text{s} \\ 6 \ \mu\text{J}, t > 1 \ \mu\text{s} \end{cases}$

c. $w(t) = \begin{cases} 0 \text{ J}, t \le 0 \\ 18 \times 10^6 t^2 \text{ J}, 0 < t \le 1 \ \mu\text{s} \\ 18 \ \mu\text{J}, t > 1 \ \mu\text{s} \end{cases}$

d. $w(t) = \begin{cases} 0 \text{ J}, t \le 0 \\ 30 \times 10^6 t \text{ J}, 0 < t \le 1 \ \mu\text{s} \\ 30 \ \mu\text{J}, t > 1 \ \mu\text{s} \end{cases}$

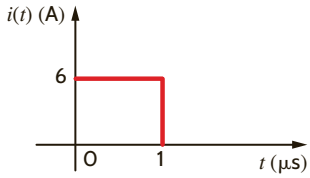

Figure 6PFE-2

6PFE-3 The two capacitors shown in Fig. 6PFE-3 have been connected for some time and have reached their present values. Determine the unknown capacitor C_x.

a. 20 μF
b. 30 μF
c. 10 μF
d. 90 μF

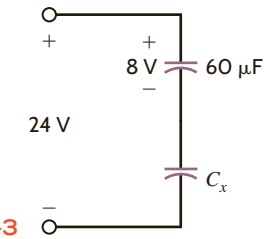

Figure 6PFE-3

6PFE-4 What is the equivalent inductance of the network in Fig. 6PFE-4?

a. 9.5 mH
b. 2.5 mH
c. 6.5 mH
d. 3.5 mH

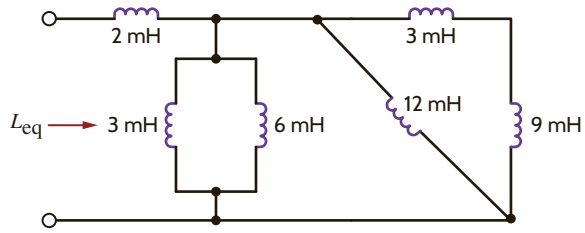

Figure 6PFE-4

6PFE-5 The current source in the circuit in Fig. 6PFE-5 has the following operating characteristics:

$$i(t) = \begin{cases} 0 \text{ A}, t < 0 \\ 20te^{-2t} \text{ A}, t > 0 \end{cases}$$

What is the voltage across the 10-mH inductor expressed as a function of time?

a. $v(t) = \begin{cases} 0 \text{ V}, t < 0 \\ 0.2e^{-2t} - 4te^{-2t} \text{ V}, t > 0 \end{cases}$

b. $v(t) = \begin{cases} 0 \text{ V}, t < 0 \\ 2e^{-2t} + 4te^{-2t} \text{ V}, t > 0 \end{cases}$

c. $v(t) = \begin{cases} 0 \text{ V}, t < 0 \\ -0.2te^{-2t} + 0.4e^{-2t} \text{ V}, t > 0 \end{cases}$

d. $v(t) = \begin{cases} 0 \text{ V}, t < 0 \\ -2te^{-2t} \text{ V}, t > 0 \end{cases}$

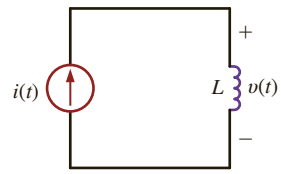

Figure 6PFE-5

Chapter Seven

THE LEARNING GOALS FOR THIS CHAPTER ARE THAT STUDENTS SHOULD BE ABLE TO:

- Calculate the initial values for inductor currents and capacitor voltages in transient circuits.
- Determine the voltages and currents in first-order transient circuits.
- Determine the voltages and currents in second-order transient circuits.
- Use PSpice to determine the voltages and currents in first-order and second-order transient circuits.

FIRST- AND SECOND-ORDER TRANSIENT CIRCUITS

EXPERIMENTS THAT HELP STUDENTS LEARN HOW TO ANALYZE FIRST- AND SECOND-ORDER TRANSIENT CIRCUITS ARE:

- A Series RC Circuit: Build a series RC circuit and measure its response to a step increase and a step decrease of the applied voltage.
- Smoothing Circuit: See how the time constant of a RC circuit can be used to reduce fluctuations in a voltage signal.
- Metronome Using a 555 Timer Chip: Construct a circuit that creates a variable frequency tone with the same range of beats per minute as a music metronome.

BY APPLYING THEIR KNOWLEDGE OF RC CIRCUITS, STUDENTS CAN DESIGN:

- A simple blinking traffic arrow in which the lights turn on in sequence from the tail to the arrowhead.
- An automatic holiday light display in which various-colored LEDs are turned on and off in time.
- A charging circuit for a photoflash, where the state of charge across a capacitor is displayed using LEDs.

7.1 Introduction

In this chapter we perform what is normally referred to as a transient analysis. We begin our analysis with first-order circuits—that is, those that contain only a single storage element. When only a single storage element is present in the network, the network can be described by a first-order differential equation.

Our analysis involves an examination and description of the behavior of a circuit as a function of time after a sudden change in the network occurs due to switches opening or closing. Because of the presence of one or more storage elements, the circuit response to a sudden change will go through a transition period prior to settling down to a steady-state value. It is this transition period that we will examine carefully in our transient analysis.

One of the important parameters that we will examine in our transient analysis is the circuit's time constant. This is a very important network parameter because it tells us how fast the circuit will respond to changes. We can contrast two very different systems to obtain a feel for the parameter. For example, consider the model for a room air-conditioning system and the model for a single-transistor stage of amplification in a computer chip. If we change the setting for the air conditioner from 70 degrees to 60 degrees, the unit will come on and the room will begin to cool. However, the temperature measured by a thermometer in the room will fall very slowly and, thus, the time required to reach the desired temperature is long. However, if we send a trigger signal to a transistor to change state, the action may take only a few nanoseconds. These two systems will have vastly different time constants.

Our analysis of first-order circuits begins with the presentation of two techniques for performing a transient analysis: the differential equation approach, in which a differential equation is written and solved for each network, and a step-by-step approach, which takes advantage of the known form of the solution in every case. In the second-order case, both an inductor and a capacitor are present simultaneously, and the network is described by a second-order differential equation. Although the *RLC* circuits are more complicated than the first-order single storage circuits, we will follow a development similar to that used in the first-order case.

Our presentation will deal only with very simple circuits, since the analysis can quickly become complicated for networks that contain more than one loop or one nonreference node. Furthermore, we will demonstrate a much simpler method for handling these circuits when we cover the Laplace transform later in this book. We will analyze several networks in which the parameters have been chosen to illustrate the different types of circuit response.

We begin our discussion by recalling that in Chapter 6 we found that capacitors and inductors were capable of storing electric energy. In the case of a charged capacitor, the energy is stored in the electric field that exists between the positively and negatively charged plates. This stored energy can be released if a circuit is somehow connected across the capacitor that provides a path through which the negative charges move to the positive charges. As we know, this movement of charge constitutes a current. The rate at which the energy is discharged is a direct function of the parameters in the circuit that is connected across the capacitor's plates.

As an example, consider the flash circuit in a camera. Recall that the operation of the flash circuit, from a user standpoint, involves depressing the push button on the camera that triggers both the shutter and the flash and then waiting a few seconds before repeating the process to take the next picture. This operation can be modeled using the circuit in **Fig. 7.1a**. The voltage source and resistor R_S model the batteries that power the camera and flash. The capacitor models the energy storage, the switch models the push button, and finally the resistor R models the xenon flash lamp. Thus, if the capacitor is charged, when the switch is closed, the capacitor voltage drops and energy is released through the xenon lamp, producing the flash. In practice this energy release takes about a millisecond, and the discharge time is a function of the elements in the circuit. When the push button is released and the switch is then opened, the battery begins to recharge the capacitor. Once again, the time required to charge the capacitor is a function of the circuit elements. The discharge and charge cycles are graphically illustrated in **Fig. 7.1b**. Although the discharge time is very fast, it is not instantaneous. To provide further insight into this phenomenon, consider what we might call a *free-body diagram* of the right half of the network in Fig. 7.1a, as shown

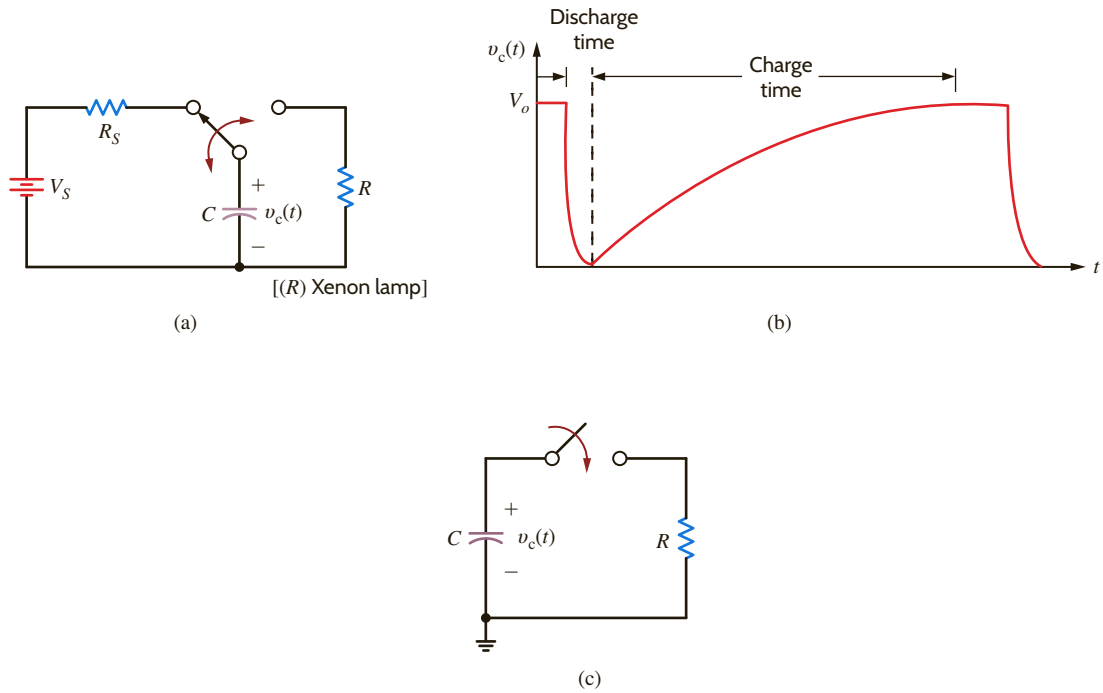

Figure 7.1

Diagrams used to describe a camera's flash circuit.

in **Fig. 7.1c** (that is, a charged capacitor that is discharged through a resistor). When the switch is closed, KCL for the circuit is

$$C\frac{dv_C(t)}{dt} + \frac{v_C(t)}{R} = 0$$

or

$$\frac{dv_C(t)}{dt} + \frac{1}{RC}v_C(t) = 0$$

In the next section, we will demonstrate that the solution of this equation is

$$v_C(t) = V_o e^{-t/RC}$$

Note that this function is a decaying exponential and the rate at which it decays is a function of the values of R and C. The product RC is a very important parameter, and we will give it a special name in the following discussions.

7.2 First-Order Circuits

GENERAL FORM OF THE RESPONSE EQUATIONS In our study of first-order transient circuits we will show that the solution of these circuits (i.e., finding a voltage or current) requires us to solve a first-order differential equation of the form

$$\frac{dx(t)}{dt} + ax(t) = f(t) \qquad \textbf{7.1}$$

Although a number of techniques may be used for solving an equation of this type, we will obtain a general solution that we will then employ in two different approaches to transient analysis.

A fundamental theorem of differential equations states that if $x(t) = x_p(t)$ is any solution to Eq. (7.1), and $x(t) = x_c(t)$ is any solution to the homogeneous equation

$$\frac{dx(t)}{dt} + ax(t) = 0 \qquad \textbf{7.2}$$

then

$$x(t) = x_p(t) + x_c(t) \tag{7.3}$$

is a solution to the original Eq. (7.1). The term $x_p(t)$ is called the *particular integral solution*, or forced response, and $x_c(t)$ is called the *complementary solution*, or natural response.

At the present time we confine ourselves to the situation in which $f(t) = A$ (i.e., some constant). The general solution of the differential equation then consists of two parts that are obtained by solving the two equations

$$\frac{dx_p(t)}{dt} + ax_p(t) = A \tag{7.4}$$

$$\frac{dx_c(t)}{dt} + ax_c(t) = 0 \tag{7.5}$$

Since the right-hand side of Eq. (7.4) is a constant, it is reasonable to assume that the solution $x_p(t)$ must also be a constant. Therefore, we assume that

$$x_p(t) = K_1 \tag{7.6}$$

Substituting this constant into Eq. (7.4) yields

$$K_1 = \frac{A}{a} \tag{7.7}$$

Examining Eq. (7.5), we note that

$$\frac{dx_c(t)/dt}{x_c(t)} = -a \tag{7.8}$$

This equation is equivalent to

$$\frac{d}{dt}[\ln x_c(t)] = -a$$

Hence,

$$\ln x_c(t) = -at + c$$

and therefore,

$$x_c(t) = K_2 e^{-at} \tag{7.9}$$

Thus, a solution of Eq. (7.1) is

$$\begin{aligned} x(t) &= x_p(t) + x_c(t) \\ &= \frac{A}{a} + K_2 e^{-at} \end{aligned} \tag{7.10}$$

The constant K_2 can be found if the value of the independent variable $x(t)$ is known at one instant of time.

Eq. (7.10) can be expressed in general in the form

$$x(t) = K_1 + K_2 e^{-t/\tau} \tag{7.11}$$

Once the solution in Eq. (7.11) is obtained, certain elements of the equation are given names that are commonly employed in electrical engineering. For example, the term K_1 is referred to as the *steady-state solution*: the value of the variable $x(t)$ as $t \to \infty$ when the second term becomes negligible. The constant τ is called the *time constant* of the circuit. Note that the second term in Eq. (7.11) is a decaying exponential that has a value, if $\tau > 0$, of K_2 for $t = 0$ and a value of 0 for $t = \infty$. The rate at which this exponential decays is determined by the time constant τ. A graphical picture of this effect is shown in **Fig. 7.2a**. As can be seen from the figure, the value of $x_c(t)$ has fallen from K_2 to a value of $0.368K_2$ in one time constant, a drop of 63.2%. In two time constants the value of $x_c(t)$ has fallen to $0.135K_2$, a drop of 63.2% from the value at time $t = \tau$. This means that the gap between a point on the curve

Figure 7.2

Time-constant illustrations.

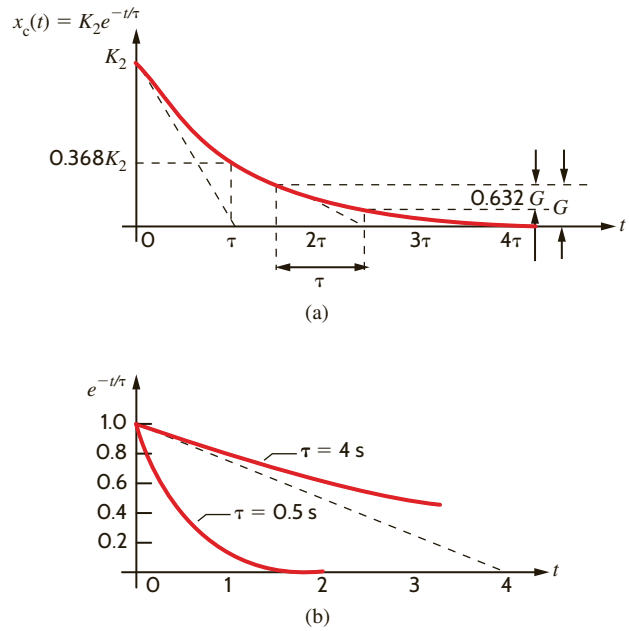

and the final value of the curve is closed by 63.2% each time constant. Finally, after five time constants, $x_c(t) = 0.0067K_2$, which is less than 1%.

An interesting property of the exponential function shown in Fig. 7.2a is that the initial slope of the curve intersects the time axis at a value of $t = \tau$. In fact, we can take any point on the curve, not just the initial value, and find the time constant by finding the time required to close the gap by 63.2%. Finally, the difference between a small time constant (i.e., fast response) and a large time constant (i.e., slow response) is shown in **Fig. 7.2b**. These curves indicate that if the circuit has a small time constant, it settles down quickly to a steady-state value. Conversely, if the time constant is large, more time is required for the circuit to settle down or reach steady state. In any case, note that the circuit response essentially reaches steady state within five time constants (i.e., 5τ).

Note that the previous discussion has been very general in that no particular form of the circuit has been assumed—except that it results in a first-order differential equation.

ANALYSIS TECHNIQUES: DIFFERENTIAL EQUATIONS Eq. (7.11) defines the general form of the solution of first-order transient circuits; that is, it represents the solution of the differential equation that describes an unknown current or voltage *anywhere in the network*. One of the ways that we can arrive at this solution is to solve the equations that describe the network behavior using what is often called the *state-variable approach*. In this technique we write the equation for the voltage across the capacitor and/or the equation for the current through the inductor. Recall from Chapter 6 that these quantities cannot change instantaneously. Let us first illustrate this technique in the general sense and then examine two specific examples.

Consider the circuit shown in **Fig. 7.3a**. At time $t = 0$, the switch closes. The KCL equation that describes the capacitor voltage for time $t > 0$ is

$$C\frac{dv(t)}{dt} + \frac{v(t) - V_S}{R} = 0$$

or

$$\frac{dv(t)}{dt} + \frac{v(t)}{RC} = \frac{V_S}{RC}$$

From our previous development, we assume that the solution of this first-order differential equation is of the form

$$v(t) = K_1 + K_2e^{-t/\tau}$$

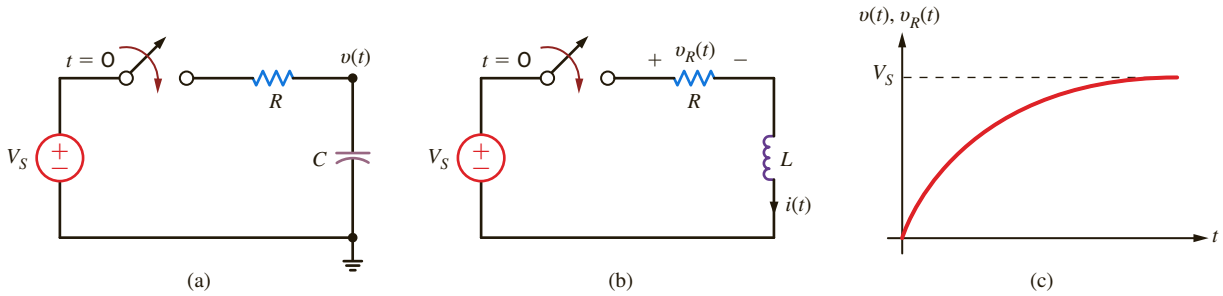

Figure 7.3

(a) *RC* circuit, (b) *RL* circuit, (c) plot of the capacitor voltage in (a) and resistor voltage in (b).

Substituting this solution into the differential equation yields

$$-\frac{K_2}{\tau}e^{-t/\tau} + \frac{K_1}{RC} + \frac{K_2}{RC}e^{-t/\tau} = \frac{V_S}{RC}$$

Equating the constant and exponential terms, we obtain

$$K_1 = V_S$$
$$\tau = RC$$

Therefore,

$$v(t) = V_S + K_2 e^{-t/RC}$$

where V_S is the steady-state value and RC is the network's time constant. K_2 is determined by the initial condition of the capacitor. For example, if the capacitor is initially uncharged (that is, the voltage across the capacitor is zero at $t = 0$), then

$$0 = V_S + K_2$$

or

$$K_2 = -V_S$$

Hence, the complete solution for the voltage $v(t)$ is

$$v(t) = V_S - V_S e^{-t/RC}$$

The circuit in **Fig. 7.3b** can be examined in a similar manner. The KVL equation that describes the inductor current for $t > 0$ is

$$L\frac{di(t)}{dt} + Ri(t) = V_S$$

A development identical to that just used yields

$$i(t) = \frac{V_S}{R} + K_2 e^{-\left(\frac{R}{L}\right)t}$$

where V_S/R is the steady-state value and L/R is the circuit's time constant. If there is no initial current in the inductor, then at $t = 0$

$$0 = \frac{V_S}{R} + K_2$$

and

$$K_2 = \frac{-V_S}{R}$$

Hence,

$$i(t) = \frac{V_S}{R} - \frac{V_S}{R}e^{-\frac{R}{L}t}$$

is the complete solution. Note that if we wish to calculate the voltage across the resistor, then

$$v_R(t) = Ri(t)$$
$$= V_S\left(1 - e^{-\frac{R}{L}t}\right)$$

Therefore, we find that the voltage across the capacitor in the *RC* circuit and the voltage across the resistor in the *RL* circuit have the same general form. A plot of these functions is shown in **Fig. 7.3c**.

EXAMPLE 7.1

Consider the circuit shown in **Fig. 7.4a**. Assuming that the switch has been in position 1 for a long time, at time $t = 0$ the switch is moved to position 2. We wish to calculate the current $i(t)$ for $t > 0$.

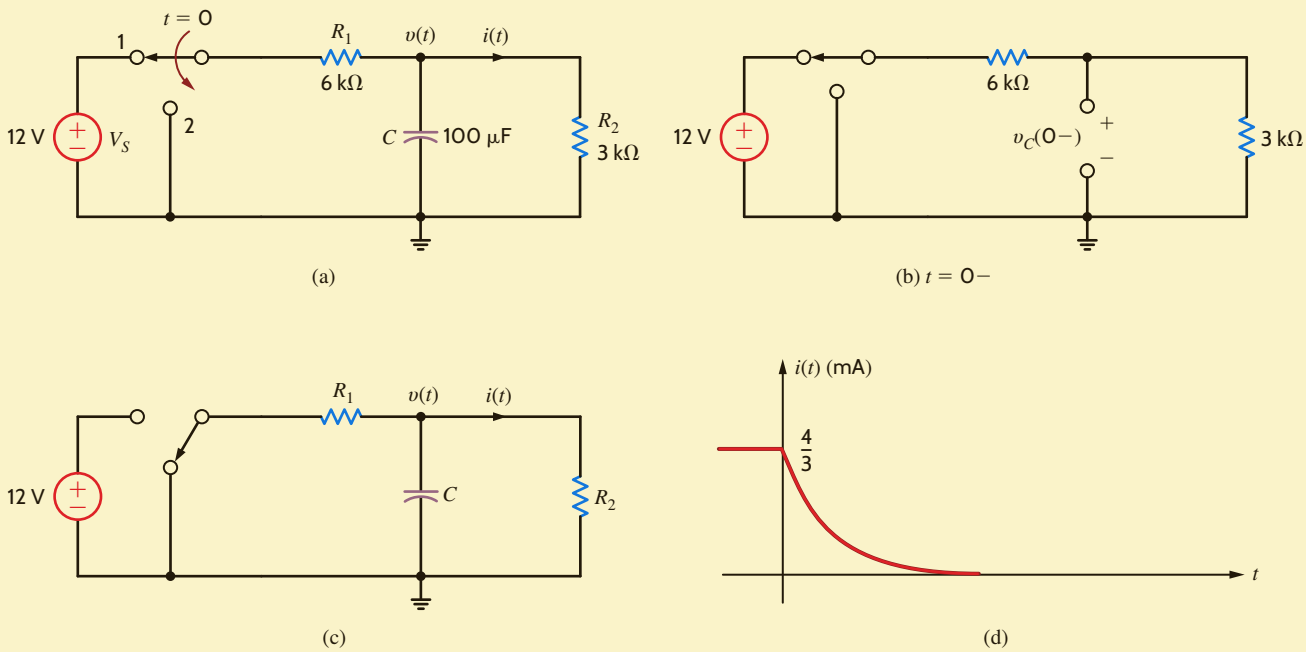

Figure 7.4
Analysis of *RC* circuits.

SOLUTION

At $t = 0-$, the capacitor is fully charged and conducts no current since the capacitor acts like an open circuit to dc. The initial voltage across the capacitor can be found using voltage division. As shown in **Fig. 7.4b**,

$$v_C(0-) = 12\left(\frac{3\text{k}}{6\text{k} + 3\text{k}}\right) + 3 = 4\text{ V}$$

The network for $t > 0$ is shown in **Fig. 7.4c**. The KCL equation for the voltage across the capacitor is

$$\frac{v(t)}{R_1} + C\frac{dv(t)}{dt} + \frac{v(t)}{R_2} = 0$$

Using the component values, the equation becomes

$$\frac{dv(t)}{dt} + 5v(t) = 0$$

The form of the solution to this homogeneous equation is

$$v(t) = K_2 e^{-t/\tau}$$

If we substitute this solution into the differential equation, we find that $\tau = 0.2$ s. Thus,

$$v(t) = K_2 e^{-t/0.2}\ \text{V}$$

Using the initial condition $v_C(0-) = v_C(0+) = 4$ V, we find that the complete solution is

$$v(t) = 4e^{-t/0.2}\ \text{V}$$

Then $i(t)$ is simply

$$i(t) = \frac{v(t)}{R_2}$$

or

$$i(t) = \frac{4}{3} e^{-t/0.2}\ \text{mA}$$

EXAMPLE 7.2

The switch in the network in Fig. 7.5a opens at $t = 0$. Let us find the output voltage $v_o(t)$ for $t > 0$.

SOLUTION

At $t = 0-$ the circuit is in steady state and the inductor acts like a short circuit. The initial current through the inductor can be found in many ways; however, we will form a Thévenin equivalent for the part of the network to the left of the inductor, as shown in Fig. 7.5b. From this network we find that $I_1 = 4$ A and $V_{oc} = 4$ V. In addition, $R_{Th} = 1\ \Omega$. Hence, $i_L(0-)$ obtained from Fig. 7.5c is $i_L(0-) = 4/3$ A.

The network for $t > 0$ is shown in Fig. 7.5d. Note that the 4-V independent source and the 2-ohm resistor in series with it no longer have any impact on the resulting circuit. The KVL equation for the circuit is

$$-V_{S_1} + R_1 i(t) + L\frac{di(t)}{dt} + R_3 i(t) = 0$$

which with the component values reduces to

$$\frac{di(t)}{dt} + 2i(t) = 6$$

The solution to this equation is of the form

$$i(t) = K_1 + K_2 e^{-t/\tau}$$

which, when substituted into the differential equation, yields

$$K_1 = 3$$
$$\tau = 1/2$$

Therefore,

$$i(t) = (3 + K_2 e^{-2t})\ \text{A}$$

Evaluating this function at the initial condition, which is

$$i_L(0-) = i_L(0+) = i(0) = 4/3\ \text{A}$$

we find that

$$K_2 = \frac{-5}{3}$$

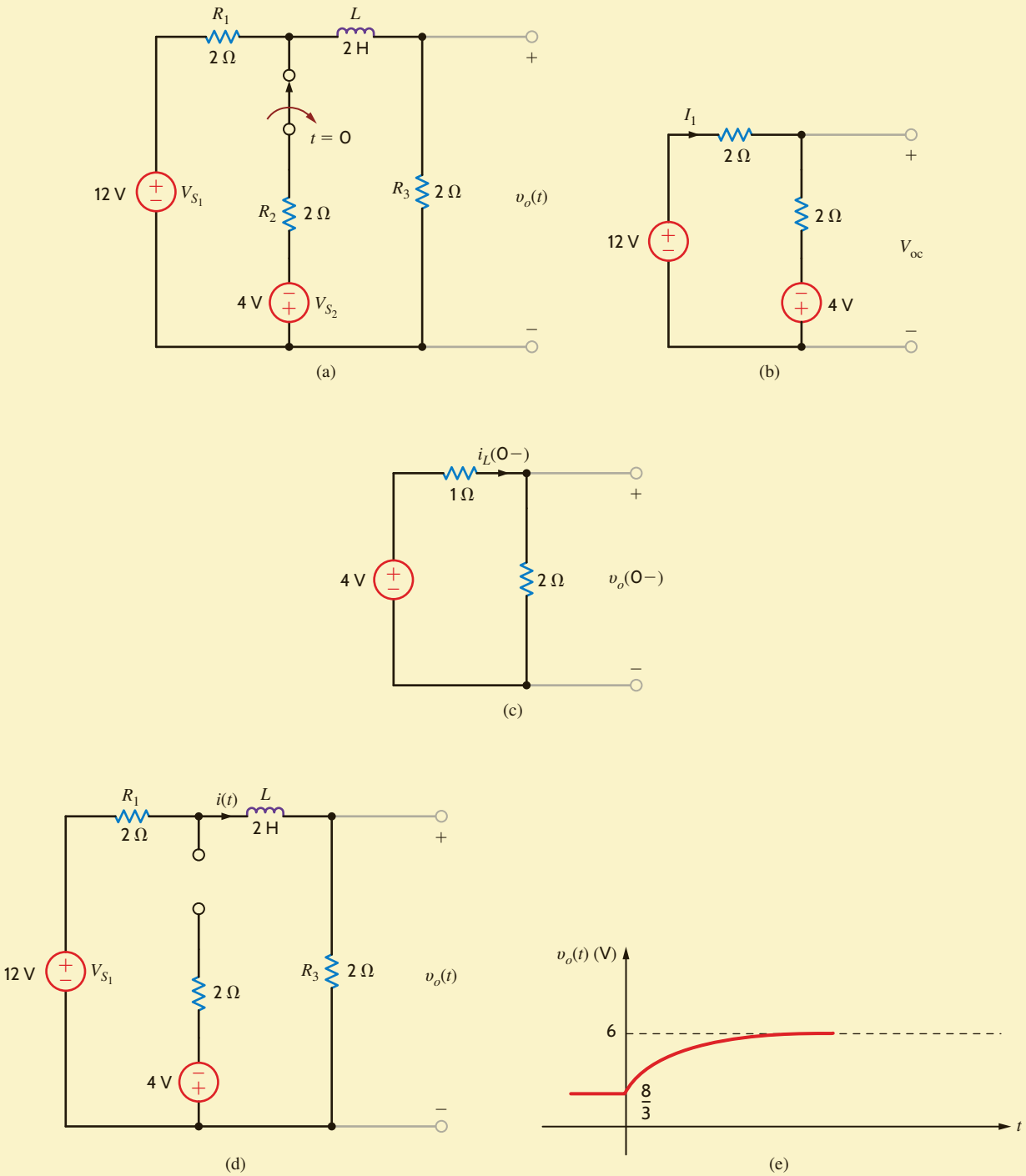

Figure 7.5

Analysis of an *RL* circuit.

Hence,

$$i(t) = \left(3 - \frac{5}{3}e^{-2t}\right) \text{A}$$

and then

$$v_o(t) = 6 - \frac{10}{3}e^{-2t} \text{ V}$$

A plot of the voltage $v_o(t)$ is shown in **Fig. 7.5e**.

LEARNING ASSESSMENTS

E7.1 Find $v_C(t)$ for $t > 0$ in the circuit shown in Fig. E7.1.

ANSWER:
$v_C(t) = 8e^{-t/0.6}$ V.

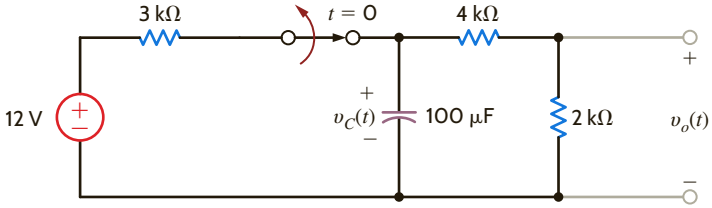

Figure E7.1

E7.2 Use the differential equation approach to find $v_o(t)$ for $t > 0$ in Fig. E7.2. Plot the response.

ANSWER:
$v_o(t) = 12 - 5e^{-t/0.015}$ V.

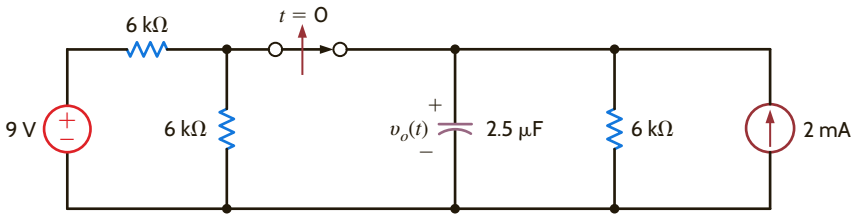

Figure E7.2

E7.3 In the circuit shown in Fig. E7.3, the switch opens at $t = 0$. Find $i_1(t)$ for $t > 0$.

ANSWER:
$i_1(t) = 1e^{-9t}$ A.

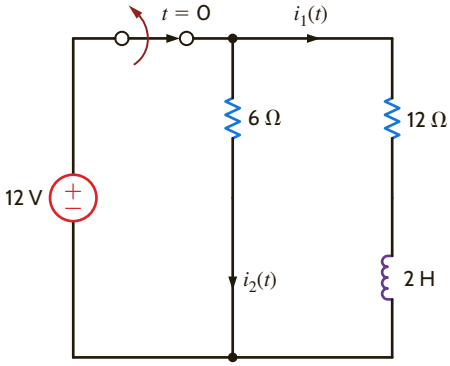

Figure E7.3

E7.4 Use the differential equation approach to find $i(t)$ for $t > 0$ in Fig. E7.4.

ANSWER:
$i(t) = -2 + 6e^{-t/5\times10^{-6}}$ mA.

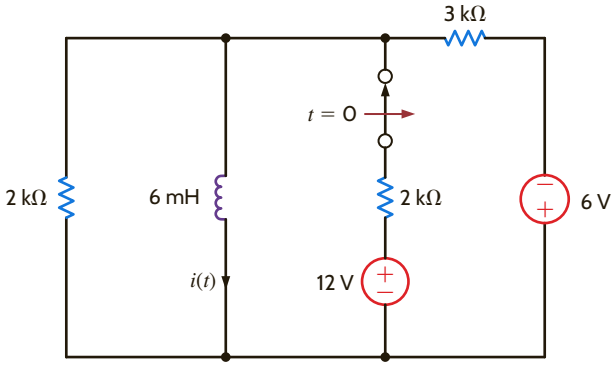

Figure E7.4

ANALYSIS TECHNIQUES: STEP BY STEP In the previous analysis technique, we derived the differential equation for the capacitor voltage or inductor current, solved the differential equation, and used the solution to find the unknown variable in the network. In the very methodical technique that we will now describe, we will use the fact that Eq. (7.11) is the form of the solution and we will employ circuit analysis to determine the constants K_1, K_2, and τ.

From Eq. (7.11) we note that as $t \to \infty$, $e^{-at} \to 0$ and $x(t) = K_1$. Therefore, if the circuit is solved for the variable $x(t)$ in steady state (i.e., $t \to \infty$) with the capacitor replaced by an open circuit [v is constant and therefore $i = C(dv/dt) = 0$] or the inductor replaced by a short circuit [i is constant and therefore $v = L(di/dt) = 0$], then the variable $x(t) = K_1$. Note that since the capacitor or inductor has been removed, the circuit is a dc circuit with constant sources and resistors, and therefore only dc analysis is required in the steady-state solution.

The constant K_2 in Eq. (7.11) can also be obtained via the solution of a dc circuit in which a capacitor is replaced by a voltage source or an inductor is replaced by a current source. The value of the voltage source for the capacitor or the current source for the inductor is a known value at one instant of time. In general, we will use the initial condition value since it is generally the one known, but the value at any instant could be used. This value can be obtained in numerous ways and is often specified as input data in a statement of the problem. However, a more likely situation is one in which a switch is thrown in the circuit and the initial value of the capacitor voltage or inductor current is determined from the previous circuit (i.e., the circuit before the switch is thrown). It is normally assumed that the previous circuit has reached steady state, and therefore the voltage across the capacitor or the current through the inductor can be found in exactly the same manner as was used to find K_1.

Finally, the value of the time constant can be found by determining the Thévenin equivalent resistance at the terminals of the storage element. Then $\tau = R_{\text{Th}}C$ for an RC circuit, and $\tau = L/R_{\text{Th}}$ for an RL circuit.

Let us now reiterate this procedure in a step-by-step fashion.

PROBLEM-SOLVING STRATEGY

USING THE STEP-BY-STEP APPROACH

STEP 1. We assume a solution for the variable $x(t)$ of the form $x(t) = K_1 + K_2e^{-t/\tau}$.

STEP 2. Assuming that the original circuit has reached steady state before a switch was thrown (thereby producing a new circuit), draw this previous circuit with the capacitor replaced by an open circuit or the inductor replaced by a short circuit. Solve for the voltage across the capacitor, $v_C(0-)$, or the current through the inductor, $i_L(0-)$, prior to switch action.

STEP 3. Recall from Chapter 6 that voltage across a capacitor and the current flowing through an inductor cannot change in zero time. Draw the circuit valid for $t = 0+$ with the switches in their new positions. Replace a capacitor with a voltage source $v_C(0+) = v_C(0-)$ or an inductor with a current source of value $i_L(0+) = i_L(0-)$. Solve for the initial value of the variable $x(0+)$.

STEP 4. Assuming that steady state has been reached after the switches are thrown, draw the equivalent circuit, valid for $t > 5\tau$, by replacing the capacitor by an open circuit or the inductor by a short circuit. Solve for the steady-state value of the variable

$$x(t)\big|_{t\,>\,5\tau} \doteq x(\infty)$$

STEP 5. Since the time constant for all voltages and currents in the circuit will be the same, it can be obtained by reducing the entire circuit to a simple series circuit containing a voltage source, resistor, and a storage element (i.e., capacitor or inductor) by forming a simple Thévenin equivalent circuit at the terminals of the storage element. This Thévenin equivalent circuit is obtained by looking into the

circuit from the terminals of the storage element. The time constant for a circuit containing a capacitor is $\tau = R_{Th}C$, and for a circuit containing an inductor it is $\tau = L/R_{Th}$.

STEP 6. Using the results of steps 3, 4, and 5, we can evaluate the constants in step 1 as

$$x(0+) = K_1 + K_2$$
$$x(\infty) = K_1$$

Therefore, $K_1 = x(\infty)$, $K_2 = x(0+) - x(\infty)$, and hence the solution is

$$x(t) = x(\infty) + [x(0+) - x(\infty)]e^{-t/\tau}$$

Keep in mind that this solution form applies only to a first-order circuit having dc sources. If the sources are not dc, the forced response will be different. Generally, the forced response is of the same form as the forcing functions (sources) and their derivatives.

EXAMPLE 7.3

Consider the circuit shown in Fig. 7.6a. The circuit is in steady state prior to time $t = 0$, when the switch is closed. Let us calculate the current $i(t)$ for $t > 0$.

SOLUTION

Step 1. $i(t)$ is of the form $K_1 + K_2e^{-t/\tau}$.

Step 2. The initial voltage across the capacitor is calculated from Fig. 7.6b as

$$v_C(0-) = 36 - (2)(2)$$
$$= 32 \text{ V}$$

Step 3. The new circuit, valid only for $t = 0+$, is shown in Fig. 7.6c. The value of the voltage source that replaces the capacitor is $v_C(0-) = v_C(0+) = 32$ V. Hence,

$$i(0+) = \frac{32}{6\text{k}}$$
$$= \frac{16}{3} \text{ mA}$$

Step 4. The equivalent circuit, valid for $t > 5\tau$, is shown in Fig. 7.6d. The current $i(\infty)$ caused by the 36-V source is

$$i(\infty) = \frac{36}{2\text{k} + 6\text{k}}$$
$$= \frac{9}{2} \text{ mA}$$

Step 5. The Thévenin equivalent resistance, obtained by looking into the open-circuit terminals of the capacitor in Fig. 7.6e, is

$$R_{Th} = \frac{(2\text{k})(6\text{k})}{2\text{k} + 6\text{k}} = \frac{3}{2} \text{ k}\Omega$$

Therefore, the circuit time constant is

$$\tau = R_{Th}C$$
$$= \left(\frac{3}{2}\right)(10^3)(100)(10^{-6})$$
$$= 0.15 \text{ s}$$

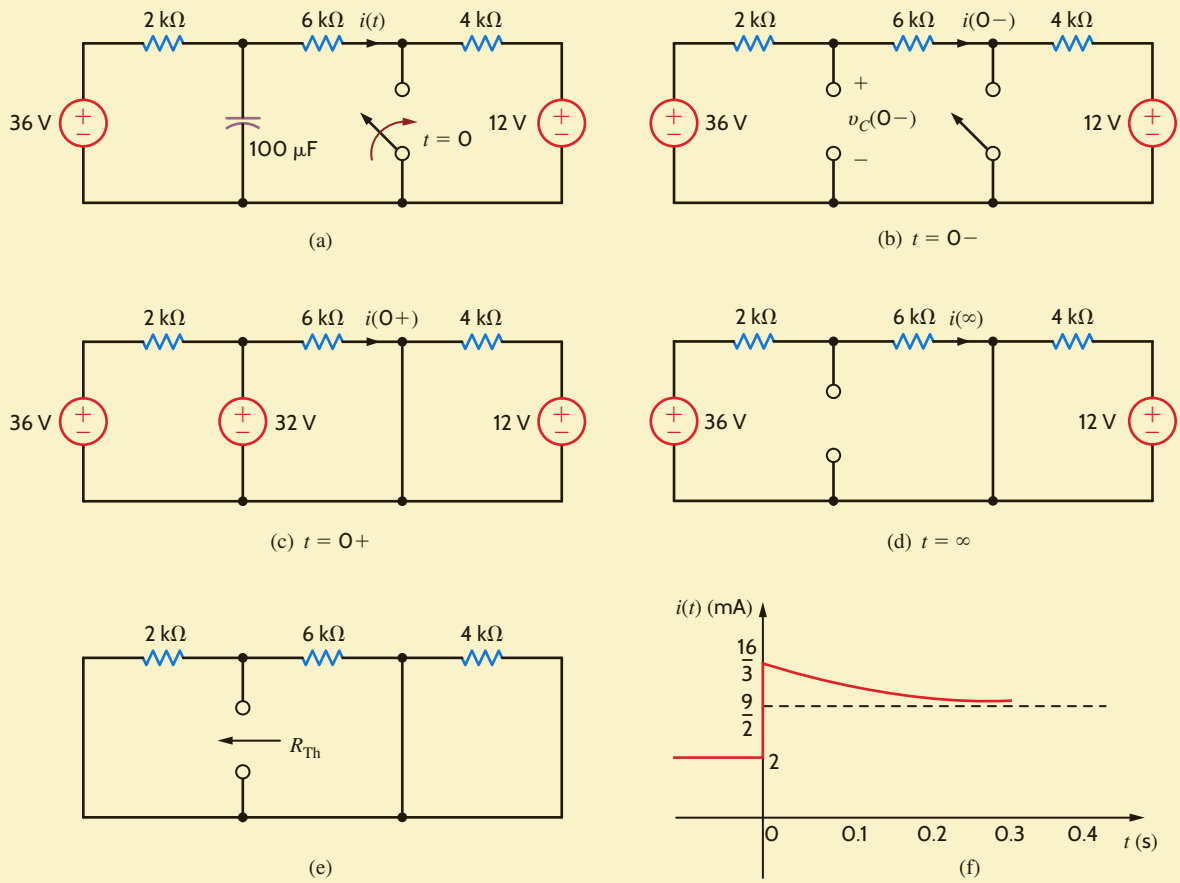

Figure 7.6

Analysis of an *RC* transient circuit with a constant forcing function.

Step 6.

$$K_1 = i(\infty) = \frac{9}{2}\text{ mA}$$

$$K_2 = i(0+) - i(\infty) = i(0+) - K_1$$

$$= \frac{16}{3} - \frac{9}{2}$$

$$= \frac{5}{6}\text{ mA}$$

Therefore,

$$i(t) = \frac{36}{8} + \frac{5}{6}e^{-t/0.15}\text{ mA}$$

The plot is shown in **Fig. 7.7** and can be compared to the sketch in **Fig. 7.6f**. Examination of Fig. 7.6f indicates once again that although the voltage across the capacitor is continuous at $t = 0$, the current $i(t)$ in the 6-kΩ resistor jumps at $t = 0$ from 2 mA to 5 1/3 mA, and finally decays to 4 1/2 mA.

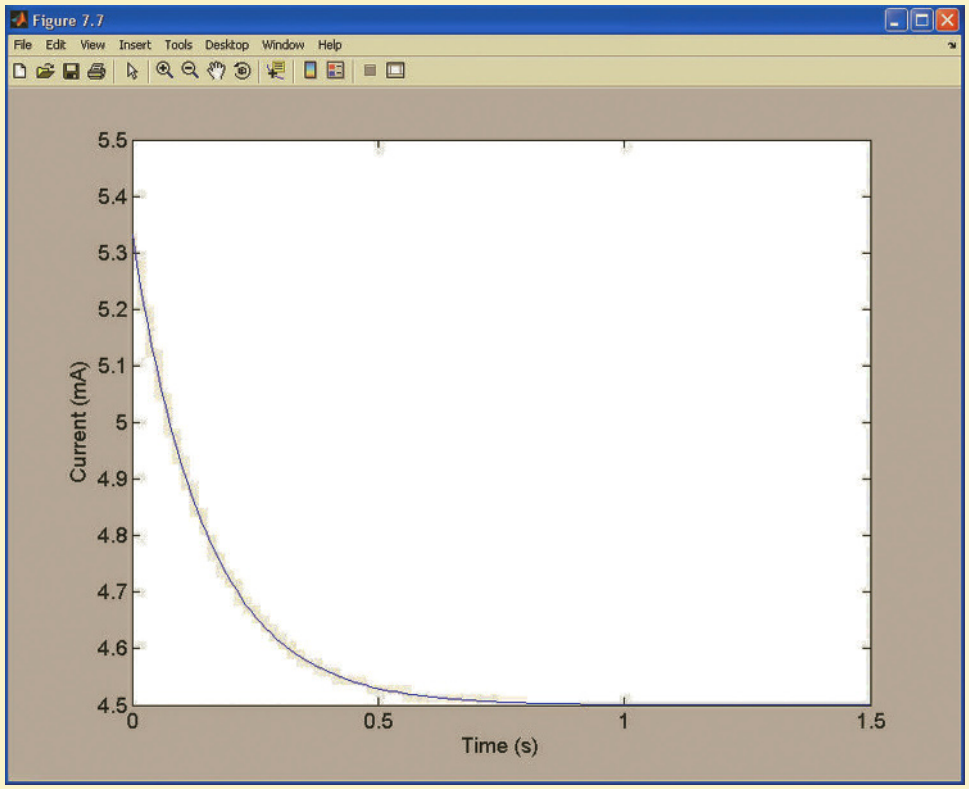

Figure 7.7
Plot for Example 7.3.

EXAMPLE 7.4

The circuit shown in **Fig. 7.8a** is assumed to have been in a steady-state condition prior to switch closure at $t = 0$. We wish to calculate the voltage $v(t)$ for $t > 0$.

SOLUTION

Step 1. $v(t)$ is of the form $K_1 + K_2 e^{-t/\tau}$.

Step 2. In **Fig. 7.8b** we see that

$$i_L(0-) = \frac{24}{4 + \dfrac{(6)(3)}{6+3}}\left(\frac{6}{6+3}\right)$$

$$= \frac{8}{3}\text{ A}$$

Step 3. The new circuit, valid only for $t = 0+$, is shown in **Fig. 7.8c**, which is equivalent to the circuit shown in **Fig. 7.8d**. The value of the current source that replaces the inductor is $i_L(0-) = i_L(0+) = 8/3$ A. The node voltage $v_1(0+)$ can be determined from the circuit in Fig. 7.8d using a single-node equation, and $v(0+)$ is equal to the difference between the source voltage and $v_1(0+)$. The equation for $v_1(0+)$ is

$$\frac{v_1(0+) - 24}{4} + \frac{v_1(0+)}{6} + \frac{8}{3} + \frac{v_1(0+)}{12} = 0$$

or

$$v_1(0+) = \frac{20}{3}\text{ V}$$

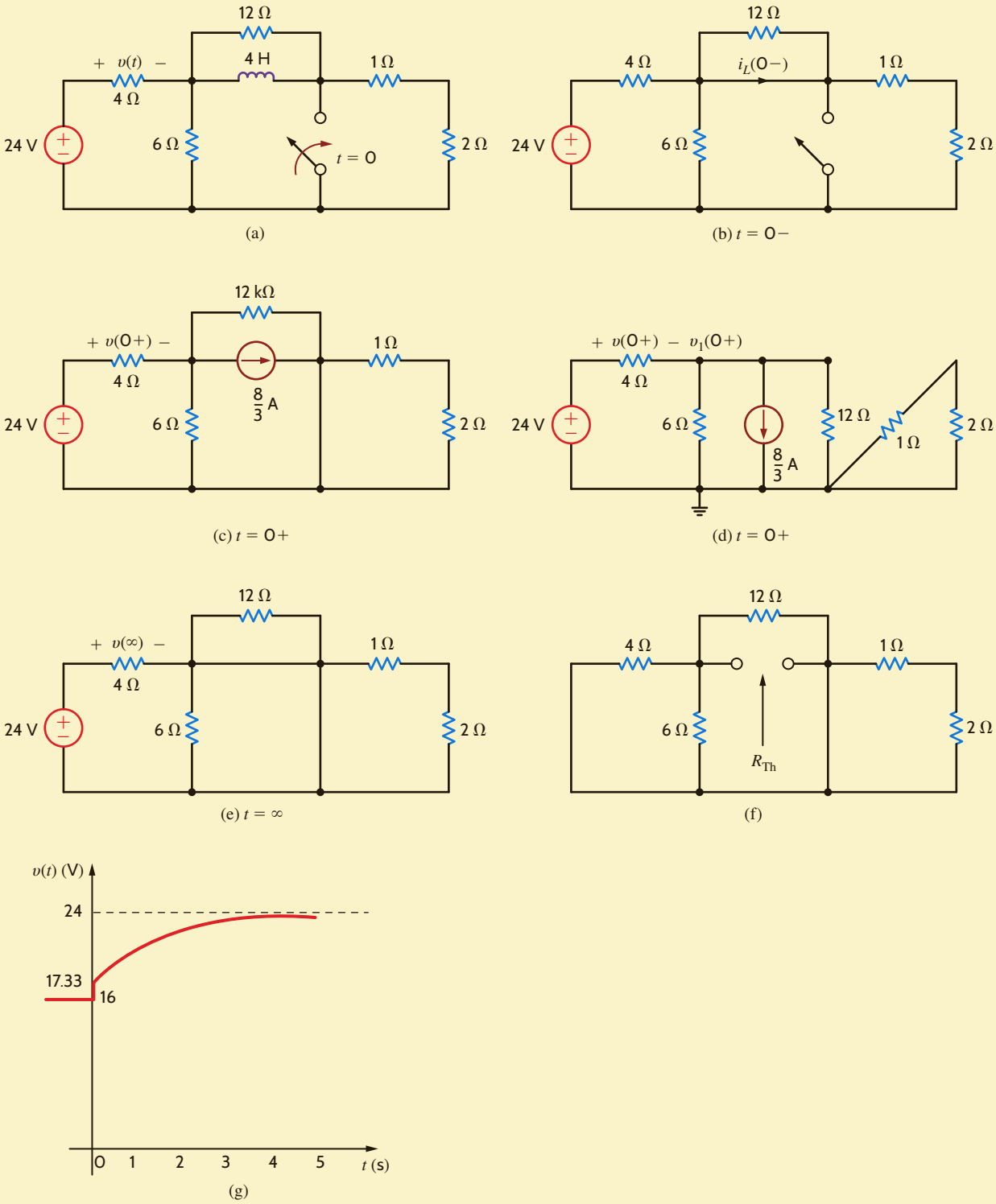

Figure 7.8

Analysis of an *RL* transient circuit with a constant forcing function.

Then

$$v(0+) = 24 - v_1(0+)$$
$$= \frac{52}{3}\text{ V}$$

Step 4. The equivalent circuit for the steady-state condition after switch closure is given in **Fig. 7.8e**. Note that the 6-, 12-, 1-, and 2-Ω resistors are shorted, and therefore $v(\infty) = 24$ V.

Step 5. The Thévenin equivalent resistance is found by looking into the circuit from the inductor terminals. This circuit is shown in **Fig. 7.8f**. Note carefully that R_{Th} is equal to the 4-, 6-, and 12-Ω resistors in parallel. Therefore, $R_{\text{Th}} = 2\ \Omega$, and the circuit time constant is

$$\tau = \frac{L}{R_{\text{Th}}} = \frac{4}{2} = 2\text{ s}$$

Step 6. From the previous analysis we find that

$$K_1 = v(\infty) = 24$$
$$K_2 = v(0+) - v(\infty) = -\frac{20}{3}$$

and hence that

$$v(t) = 24 - \frac{20}{3}e^{-t/2}\text{ V}$$

From Fig. 7.8b we see that the value of $v(t)$ before switch closure is 16 V. This value jumps to 17.33 V at $t = 0$.

A plot of this function for $t > 0$ is shown in **Fig. 7.9**.

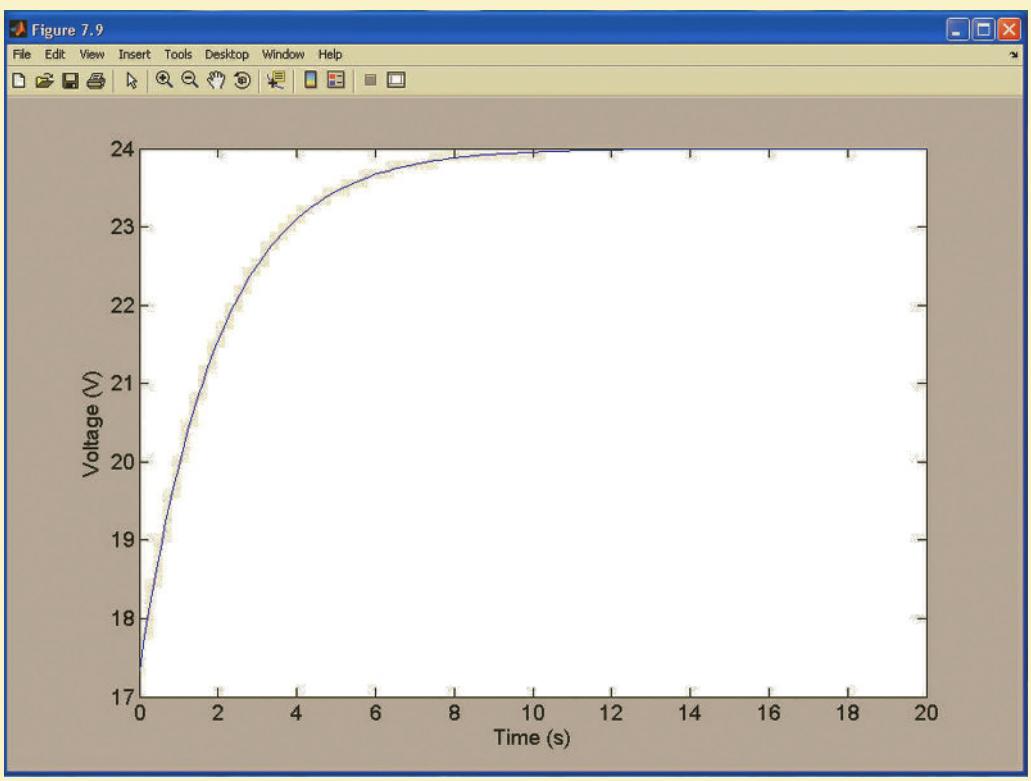

Figure 7.9
Plot for Example 7.4.

LEARNING ASSESSMENTS

E7.5 Consider the network in Fig. E7.5. The switch opens at $t = 0$. Find $v_o(t)$ for $t > 0$.

ANSWER:
$v_o(t) = \frac{24}{5} + \frac{1}{5}e^{-(5/8)t}$ V.

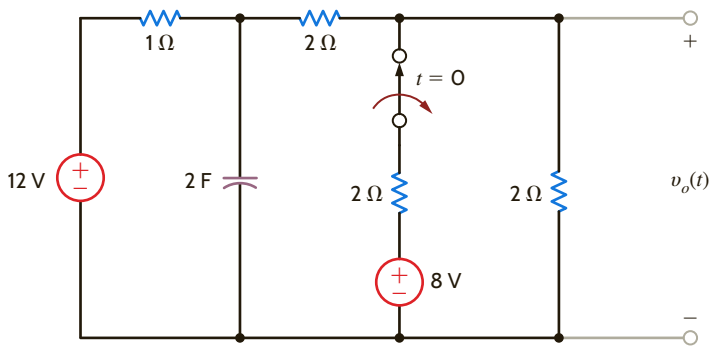

Figure E7.5

E7.6 Consider the network in Fig. E7.6. If the switch opens at $t = 0$, find the output voltage $v_o(t)$ for $t > 0$.

ANSWER:
$v_o(t) = 6 - \frac{10}{3}e^{-2t}$ V.

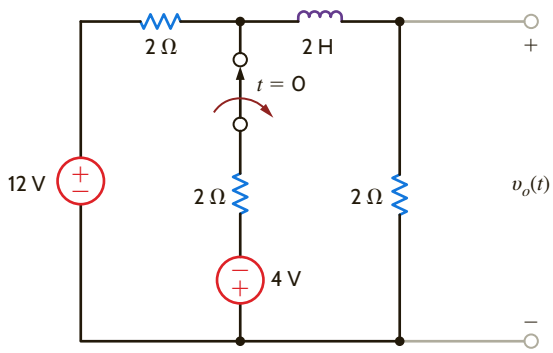

Figure E7.6

E7.7 Find $v_o(t)$ for $t > 0$ in Fig. E7.7 using the step-by-step method.

ANSWER:
$v_o(t) = -3.33e^{-t/0.06}$ V.

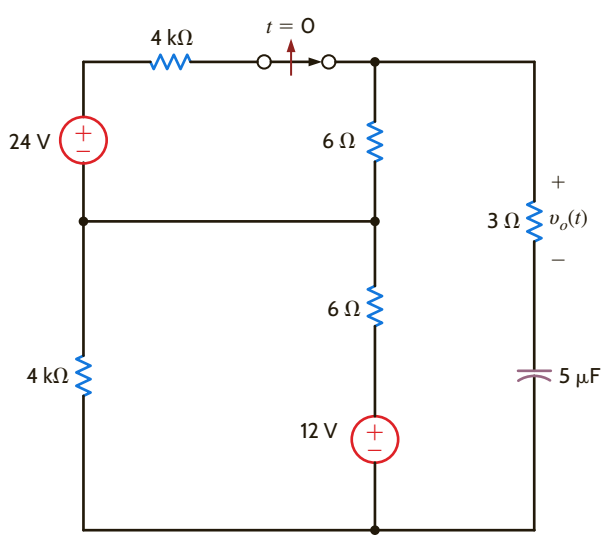

Figure E7.7

E7.8 Find $i_o(t)$ for $t > 0$ in Fig. E7.8 using the step-by-step method.

ANSWER:
$i_o(t) = 2.1 - 0.6e^{-t/0.001}$ A.

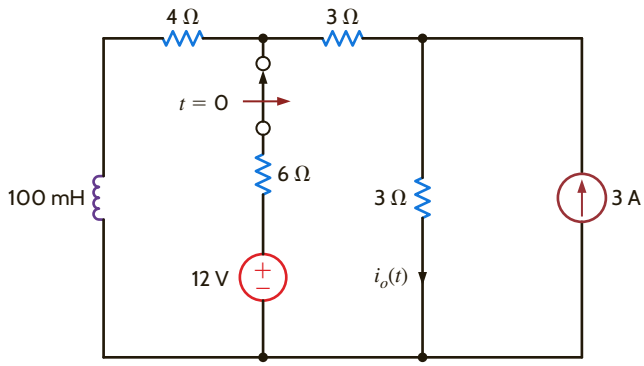

Figure E7.8

EXAMPLE 7.5

The circuit shown in Fig. 7.10a has reached steady state with the switch in position 1. At time $t = 0$ the switch moves from position 1 to position 2. We want to calculate $v_o(t)$ for $t > 0$.

SOLUTION

Step 1. $v_o(t)$ is of the form $K_1 + K_2e^{-t/\tau}$.

Step 2. Using the circuit in Fig. 7.10b, we can calculate $i_L(0-)$:

$$i_A = \frac{12}{4} = 3 \text{ A}$$

Then

$$i_L(0-) = \frac{12 + 2i_A}{6} = \frac{18}{6} = 3 \text{ A}$$

Step 3. The new circuit, valid only for $t = 0+$, is shown in Fig. 7.10c. The value of the current source that replaces the inductor is $i_L(0-) = i_L(0+) = 3$ A. Because of the current source

$$v_o(0+) = (3)(6) = 18 \text{ V}$$

Step 4. The equivalent circuit, for the steady-state condition after switch closure, is given in Fig. 7.10d. Using the voltages and currents defined in the figure, we can compute $v_o(\infty)$ in a variety of ways. For example, using node equations, we can find $v_o(\infty)$ from

$$\frac{v_B - 36}{2} + \frac{v_B}{4} + \frac{v_B + 2i'_A}{6} = 0$$

$$i'_A = \frac{v_B}{4}$$

$$v_o(\infty) = v_B + 2i'_A$$

or, using loop equations,

$$36 = 2(i_1 + i_2) + 4i_1$$

$$36 = 2(i_1 + i_2) + 6i_2 - 2i_1$$

$$v_o(\infty) = 6i_2$$

Using either approach, we find that $v_o(\infty) = 27$ V.

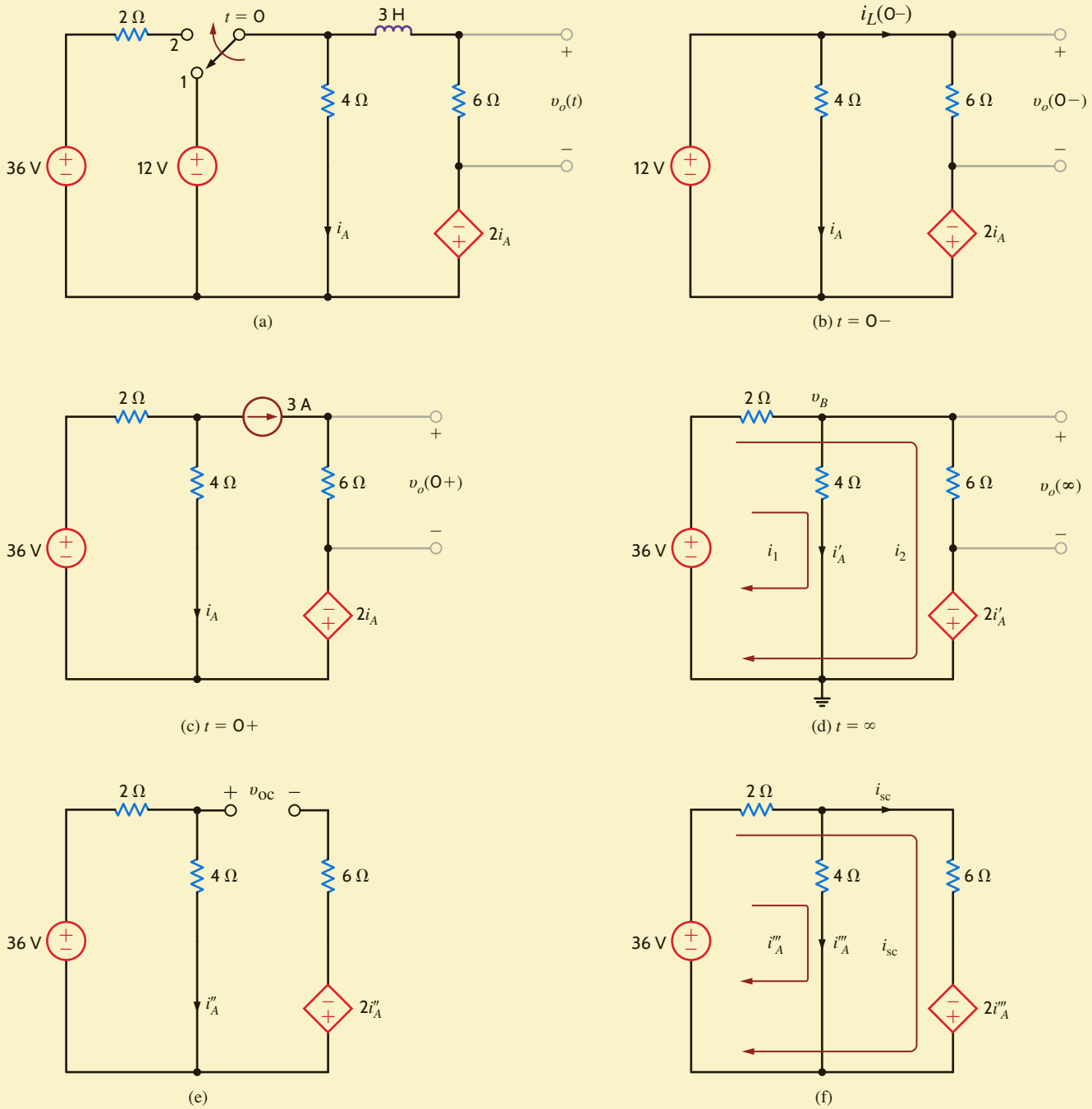

Figure 7.10

Analysis of an *RL* transient circuit containing a dependent source.

Step 5. The Thévenin equivalent resistance can be obtained via v_{oc} and i_{sc} because of the presence of the dependent source. From **Fig. 7.10e** we note that

$$i''_A = \frac{36}{2+4} = 6 \text{ A}$$

Therefore,

$$\begin{aligned} v_{oc} &= (4)(6) + 2(6) \\ &= 36 \text{ V} \end{aligned}$$

From **Fig. 7.10f** we can write the following loop equations (identical to those in step 4).

$$36 = 2(i_A''' + i_{sc}) + 4i_A'''$$
$$36 = 2(i_A''' + i_{sc}) + 6i_{sc} - 2i_A'''$$

Solving these equations for i_{sc} yields

$$i_{sc} = \frac{9}{2}\text{ A}$$

Therefore,

$$R_{Th} = \frac{v_{oc}}{i_{sc}} = \frac{36}{9/2} = 8\ \Omega$$

Hence, the circuit time constant is

$$\tau = \frac{L}{R_{Th}} = \frac{3}{8}\text{ s}$$

Step 6. Using the information just computed, we can derive the final equation for $v_o(t)$:

$$K_1 = v_o(\infty) = 27$$
$$K_2 = v_o(0+) - v_o(\infty) = 18 - 27 = -9$$

Therefore,

$$v_o(t) = 27 - 9e^{-t/(3/8)}\text{ V}$$

LEARNING ASSESSMENTS

E7.9 If the switch in the network in Fig. E7.9 closes at $t = 0$, find $v_o(t)$ for $t > 0$.

ANSWER: $v_o(t) = 24 + 36e^{-(t/12)}$ V.

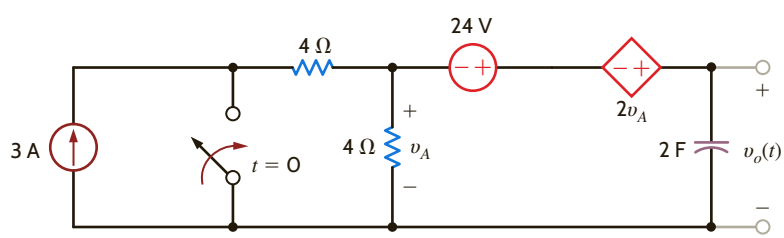

Figure E7.9

E7.10 Find $i_o(t)$ for $t > 0$ in Fig. E7.10 using the step-by-step method.

ANSWER: $i_o(t) = 1.5 + 0.2143\,e^{-(t/0.7)}$ mA.

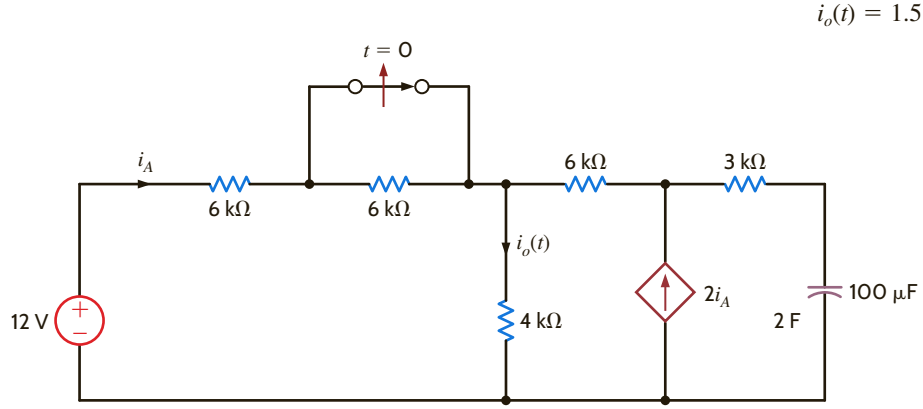

Figure E7.10

At this point, it is appropriate to state that not all switch action will always occur at time $t = 0$. It may occur at any time t_0. In this case the results of the step-by-step analysis yield the following equations:

$$x(t_0) = K_1 + K_2$$
$$x(\infty) = K_1$$

and

$$x(t) = x(\infty) + [x(t_0) - x(\infty)]e^{-(t - t_0)/\tau} \qquad t > t_0$$

The function is essentially time-shifted by t_0 seconds.

Finally, note that if more than one independent source is present in the network, we can simply employ superposition to obtain the total response.

PULSE RESPONSE Thus far we have examined networks in which a voltage or current source is suddenly applied. As a result of this sudden application of a source, voltages or currents in the circuit are forced to change abruptly. A forcing function whose value changes in a discontinuous manner or has a discontinuous derivative is called a *singular function*. Two such singular functions that are very important in circuit analysis are the unit impulse function and the unit step function. We will defer a discussion of the unit impulse function until a later chapter and concentrate on the unit step function.

The *unit step function* is defined by the following mathematical relationship:

$$u(t) = \begin{cases} 0 & t < 0 \\ 1 & t > 0 \end{cases}$$

In other words, this function, which is dimensionless, is equal to zero for negative values of the argument and equal to 1 for positive values of the argument. It is undefined for a zero argument where the function is discontinuous. A graph of the unit step is shown in **Fig. 7.11a**.

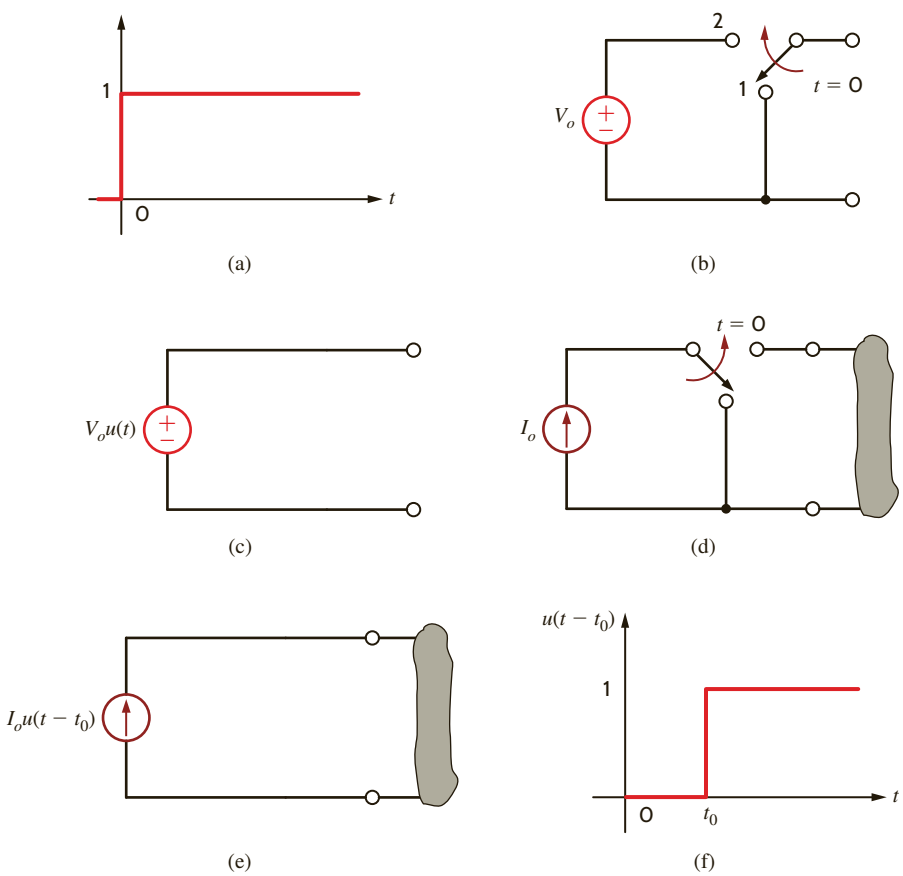

Figure 7.11
Graphs and models of the unit step function.

The unit step is dimensionless, and therefore a voltage step of V_o volts or a current step of I_o amperes is written as $V_o u(t)$ and $I_o u(t)$, respectively. Equivalent circuits for a voltage step are shown in **Figs. 7.11b** and **c**. Equivalent circuits for a current step are shown in **Figs. 7.11d** and **e**. If we use the definition of the unit step, it is easy to generalize this function by replacing the argument t by $t - t_0$. In this case

$$u(t - t_0) = \begin{cases} 0 & t < t_0 \\ 1 & t > t_0 \end{cases}$$

A graph of this function is shown in **Fig. 7.11f**. Note that $u(t - t_0)$ is equivalent to delaying $u(t)$ by t_0 seconds, so that the abrupt change occurs at time $t = t_0$.

Step functions can be used to construct one or more pulses. For example, the voltage pulse shown in **Fig. 7.12a** can be formulated by initiating a unit step at $t = 0$ and subtracting one that starts at $t = T$, as shown in **Fig. 7.12b**. The equation for the pulse is

$$v(t) = A[u(t) - u(t - T)]$$

If the pulse is to start at $t = t_0$ and have width T, the equation would be

$$v(t) = A\{u(t - t_0) - u[t - (t_0 + T)]\}$$

Using this approach, we can write the equation for a pulse starting at any time and ending at any time. Similarly, using this approach, we could write the equation for a series of pulses, called a *pulse train*, by simply forming a summation of pulses constructed in the manner illustrated previously.

The following example will serve to illustrate many of the concepts we have just presented.

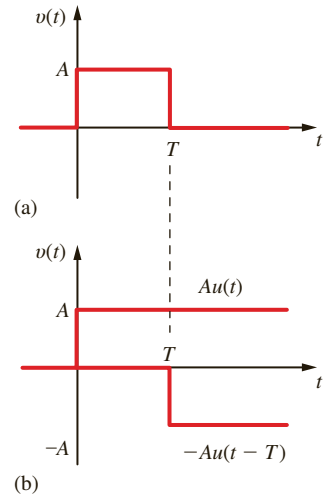

Figure 7.12
Construction of a pulse via two step functions.

EXAMPLE 7.6

Consider the circuit shown in **Fig. 7.13a**. The input function is the voltage pulse shown in **Fig. 7.13b**. Since the source is zero for all negative time, the initial conditions for the

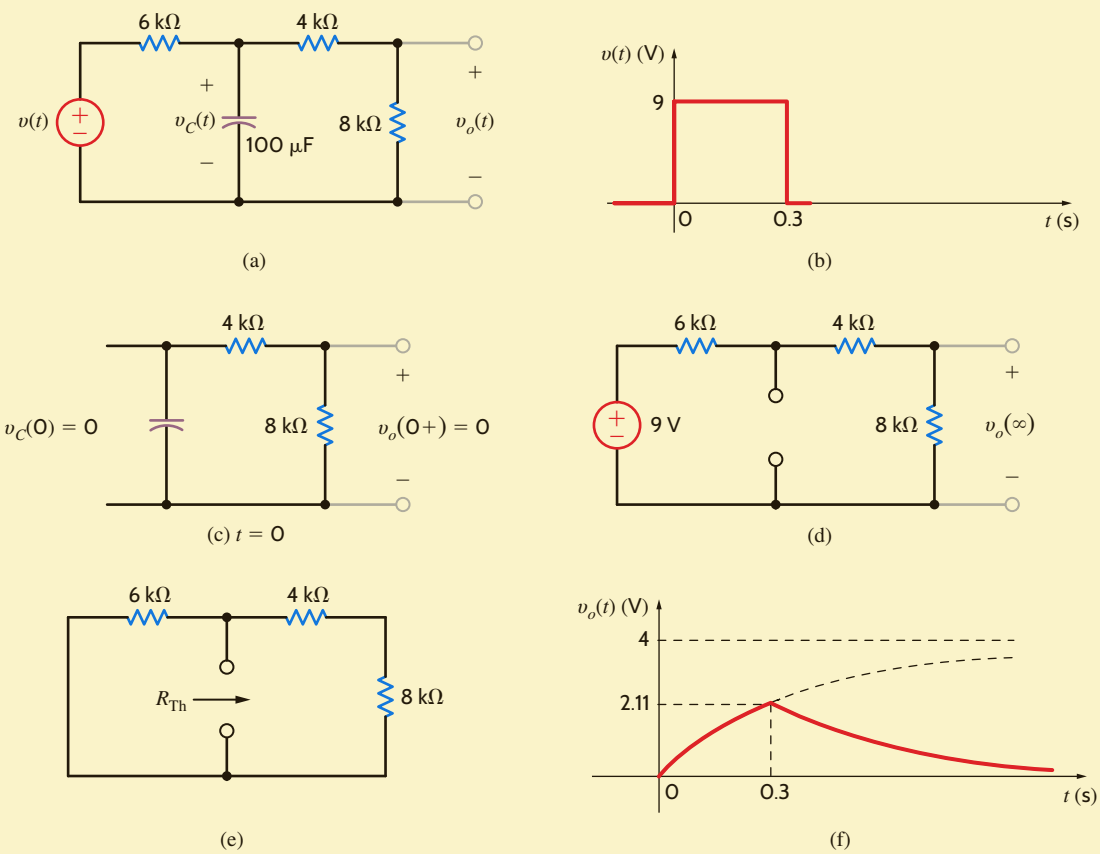

Figure 7.13
Pulse response of a network.

network are zero [i.e., $v_C(0-) = 0$]. The response $v_o(t)$ for $0 < t < 0.3$ s is due to the application of the constant source at $t = 0$ and is not influenced by any source changes that will occur later. At $t = 0.3$ s the forcing function becomes zero, and therefore $v_o(t)$ for $t > 0.3$ s is the source-free or natural response of the network.

Let us determine the expression for the voltage $v_o(t)$.

SOLUTION

Since the output voltage $v_o(t)$ is a voltage division of the capacitor voltage, and the initial voltage across the capacitor is zero, we know that $v_o(0+) = 0$, as shown in **Fig. 7.13c**.

If no changes were made in the source after $t = 0$, the steady-state value of $v_o(t)$ [i.e., $v_o(\infty)$] due to the application of the unit step at $t = 0$ would be

$$v_o(\infty) = \frac{9}{6\text{k} + 4\text{k} + 8\text{k}}(8\text{k}) = 4 \text{ V}$$

as shown in **Fig. 7.13d**.

The Thévenin equivalent resistance is

$$R_{\text{Th}} = \frac{(6\text{k})(12\text{k})}{6\text{k} + 12\text{k}} = 4 \text{ k}\Omega$$

as illustrated in **Fig. 7.13e**.

The circuit time constant τ is

$$\tau = R_{\text{Th}}C = (4)(10^3)(100)(10^{-6}) = 0.4 \text{ s}$$

Therefore, the response $v_o(t)$ for the period $0 < t < 0.3$ s is

$$v_o(t) = 4 - 4e^{-t/0.4} \text{ V} \qquad 0 < t < 0.3 \text{ s}$$

The capacitor voltage can be calculated by realizing that using voltage division, $v_o(t) = 2/3\ v_C(t)$:

$$v_C(t) = \frac{3}{2}\left(4 - 4e^{-t/0.4}\right) \text{ V}$$

Since the capacitor voltage is continuous,

$$v_C(0.3-) = v_C(0.3+)$$

then

$$v_o(0.3+) = \frac{2}{3}v_C(0.3-) = 4\left(1 - e^{-0.3/0.4}\right) = 2.11 \text{ V}$$

Since the source is zero for $t > 0.3$ s, the final value for $v_o(t)$ as $t \to \infty$ is zero. Thus, the expression for $v_o(t)$ for $t > 0.3$ s is

$$v_o(t) = 2.11e^{-(t-0.3)/0.4} \text{ V} \qquad t > 0.3 \text{ s}$$

The term $e^{-(t-0.3)/0.4}$ indicates that the exponential decay starts at $t = 0.3$ s. The complete solution can be written by means of superposition as

$$v_o(t) = 4(1 - e^{-t/0.4})u(t) - 4(1 - e^{-(t-0.3)/0.4})u(t - 0.3) \text{ V}$$

or, equivalently, the complete solution is

$$v_o(t) = \begin{cases} 0 & t < 0 \\ 4(1 - e^{-t/0.4}) \text{ V} & 0 < t < 0.3 \text{ s} \\ 2.11e^{-(t-0.3)/0.4} \text{ V} & 0.3 \text{ s} < t \end{cases}$$

which in mathematical form is

$$v_o(t) = 4(1 - e^{-t/0.4})[u(t) - u(t - 0.3)] + 2.11e^{-(t-0.3)/0.4}\,u(t - 0.3)\ \text{V}$$

Note that the term $[u(t) - u(t - 0.3)]$ acts like a gating function that captures only the part of the step response that exists in the time interval $0 < t < 0.3$ s. The output as a function of time is shown in **Fig. 7.13f**.

LEARNING ASSESSMENT

E7.11 The voltage source in the network in Fig. E7.11a is shown in Fig. E7.11b. The initial current in the inductor must be zero. (Why?) Determine the output voltage $v_o(t)$ for $t > 0$.

ANSWER:
$v_o(t) = 0$ for $t < 0$, $4(1 - e^{-(3/2)t})$ V for $0 \leqq t \leqq 1$ s, and $3.11e^{-(3/2)(t-1)}$ V for $t > 1$ s.

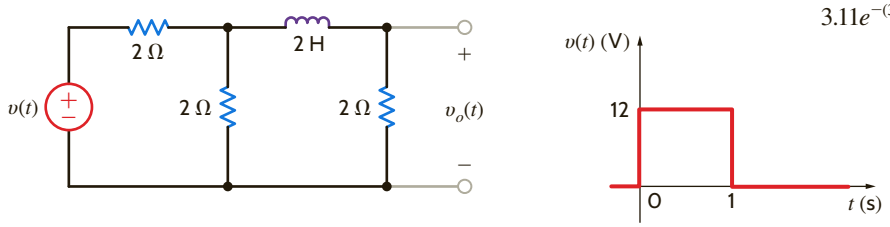

(a) (b)

Figure E7.11

7.3 Second-Order Circuits

THE BASIC CIRCUIT EQUATION To begin our development, let us consider the two basic *RLC* circuits shown in **Fig. 7.14**. We assume that energy may be initially stored in both the inductor and capacitor. The node equation for the parallel *RLC* circuit is

$$\frac{v}{R} + \frac{1}{L}\int_{t_0}^{t} v(x)\,dx + i_L(t_0) + C\frac{dv}{dt} = i_S(t)$$

Similarly, the loop equation for the series *RLC* circuit is

$$Ri + \frac{1}{C}\int_{t_0}^{t} i(x)\,dx + v_C(t_0) + L\frac{di}{dt} = v_S(t)$$

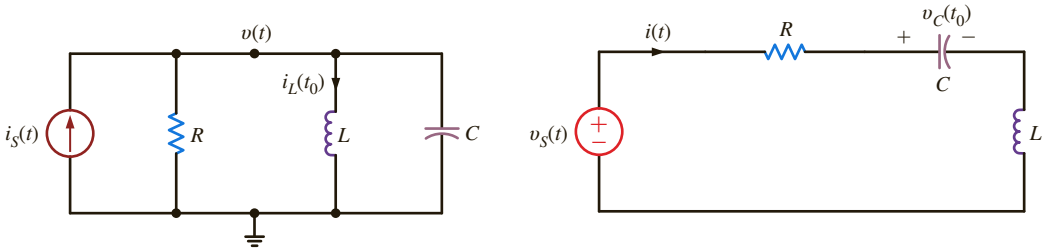

(a) (b)

Figure 7.14
Parallel and series *RLC* circuits.

Note that the equation for the node voltage in the parallel circuit is of the same form as that for the loop current in the series circuit. Therefore, the solution of these two circuits is dependent on solving one equation. If the two preceding equations are differentiated with respect to time, we obtain

$$C\frac{d^2v}{dt^2} + \frac{1}{R}\frac{dv}{dt} + \frac{v}{L} = \frac{di_S}{dt}$$

and

$$L\frac{d^2i}{dt^2} + R\frac{di}{dt} + \frac{i}{C} = \frac{dv_S}{dt}$$

Since both circuits lead to a second-order differential equation with constant coefficients, we will concentrate our analysis on this type of equation.

THE RESPONSE EQUATIONS In concert with our development of the solution of a first-order differential equation that results from the analysis of either an *RL* or an *RC* circuit as outlined earlier, we will now employ the same approach here to obtain the solution of a second-order differential equation that results from the analysis of *RLC* circuits. As a general rule, for this case we are confronted with an equation of the form

$$\frac{d^2x(t)}{dt^2} + a_1\frac{dx(t)}{dt} + a_2x(t) = f(t) \qquad \textbf{7.12}$$

Once again, we use the fact that if $x(t) = x_p(t)$ is a solution to Eq. (7.12), and if $x(t) = x_c(t)$ is a solution to the homogeneous equation

$$\frac{d^2x(t)}{dt^2} + a_1\frac{dx(t)}{dt} + a_2x(t) = 0$$

then

$$x(t) = x_p(t) + x_c(t)$$

is a solution to the original Eq. (7.12). If we again confine ourselves to a constant forcing function [i.e., $f(t) = A$], the development at the beginning of this chapter shows that the solution of Eq. (7.12) will be of the form

$$x(t) = \frac{A}{a_2} + x_c(t) \qquad \textbf{7.13}$$

Let us now turn our attention to the solution of the homogeneous equation

$$\frac{d^2x(t)}{dt^2} + a_1\frac{dx(t)}{dt} + a_2x(t) = 0$$

where a_1 and a_2 are constants. For simplicity we will rewrite the equation in the form

$$\frac{d^2x(t)}{dt^2} + 2\zeta\omega_0\frac{dx(t)}{dt} + \omega_0^2x(t) = 0 \qquad \textbf{7.14}$$

where we have made the following simple substitutions for the constants $a_1 = 2\zeta\omega_0$ and $a_2 = \omega_0^2$.

Following the development of a solution for the first-order homogeneous differential equation earlier in this chapter, the solution of Eq. (7.14) must be a function whose first- and second-order derivatives have the same form, so that the left-hand side of Eq. (7.14) will become identically zero for all t. Again, we assume that

$$x(t) = Ke^{st}$$

Substituting this expression into Eq. (7.14) yields

$$s^2Ke^{st} + 2\zeta\omega_0sKe^{st} + \omega_0^2Ke^{st} = 0$$

Dividing both sides of the equation by Ke^{st} yields

$$s^2 + 2\zeta\omega_0 s + \omega_0^2 = 0 \tag{7.15}$$

This equation is commonly called the *characteristic equation*; ζ is called the exponential *damping ratio*, and ω_0 is referred to as the *undamped natural frequency*. The importance of this terminology will become clear as we proceed with the development. If this equation is satisfied, our assumed solution $x(t) = Ke^{st}$ is correct. Employing the quadratic formula, we find that Eq. (7.15) is satisfied if

$$\begin{aligned} s &= \frac{-2\zeta\omega_0 \pm \sqrt{4\zeta^2\omega_0^2 - 4\omega_0^2}}{2} \\ &= -\zeta\omega_0 \pm \omega_0\sqrt{\zeta^2 - 1} \end{aligned} \tag{7.16}$$

Therefore, two values of s, s_1 and s_2, satisfy Eq. (7.15):

$$\begin{aligned} s_1 &= -\zeta\omega_0 + \omega_0\sqrt{\zeta^2 - 1} \\ s_2 &= -\zeta\omega_0 - \omega_0\sqrt{\zeta^2 - 1} \end{aligned} \tag{7.17}$$

In general, then, the complementary solution of Eq. (7.14) is of the form

$$x_c(t) = K_1 e^{s_1 t} + K_2 e^{s_2 t} \tag{7.18}$$

K_1 and K_2 are constants that can be evaluated via the initial conditions $x(0)$ and $dx(0)/dt$. For example, since

$$x(t) = K_1 e^{s_1 t} + K_2 e^{s_2 t}$$

then

$$x(0) = K_1 + K_2$$

and

$$\left.\frac{dx(t)}{dt}\right|_{t=0} = \frac{dx(0)}{dt} = s_1 K_1 + s_2 K_2$$

Hence, $x(0)$ and $dx(0)/dt$ produce two simultaneous equations, which when solved yield the constants K_1 and K_2.

Close examination of Eqs. (7.17) and (7.18) indicates that the form of the solution of the homogeneous equation is dependent on the value ζ. For example, if $\zeta > 1$, the roots of the characteristic equation, s_1 and s_2, also called the *natural frequencies* because they determine the natural (unforced) response of the network, are real and unequal; if $\zeta < 1$, the roots are complex numbers; and finally, if $\zeta = 1$, the roots are real and equal.

Let us now consider the three distinct forms of the unforced response—that is, the response due to an initial capacitor voltage or initial inductor current.

Case 1, $\zeta > 1$ This case is commonly called *overdamped*. The natural frequencies s_1 and s_2 are real and unequal; therefore, the natural response of the network described by the second-order differential equation is of the form

$$x_c(t) = K_1 e^{-(\zeta\omega_0 - \omega_0\sqrt{\zeta^2-1})t} + K_2 e^{-(\zeta\omega_0 + \omega_0\sqrt{\zeta^2-1})t} \tag{7.19}$$

where K_1 and K_2 are found from the initial conditions. This indicates that the natural response is the sum of two decaying exponentials.

Case 2, $\zeta < 1$ This case is called *underdamped*. Since $\zeta < 1$, the roots of the characteristic equation given in Eq. (7.17) can be written as

$$\begin{aligned} s_1 &= -\zeta\omega_0 + j\omega_0\sqrt{1 - \zeta^2} = -\sigma + j\omega_d \\ s_2 &= -\zeta\omega_0 - j\omega_0\sqrt{1 - \zeta^2} = -\sigma - j\omega_d \end{aligned}$$

Figure 7.15

Comparison of overdamped, critically damped, and underdamped responses.

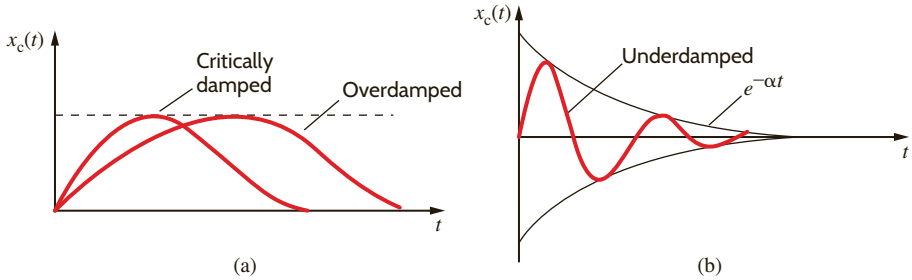

where $j = \sqrt{-1}$, $\sigma = \zeta\omega_0$, and $\omega_d = \omega_0\sqrt{1 - \zeta^2}$. Thus, the natural frequencies are complex numbers (briefly discussed in the Appendix). The natural response is then of the form

$$x_c(t) = e^{-\zeta\omega_0 t}\left(A_1 \cos \omega_0\sqrt{1 - \zeta^2 t} + A_2 \sin \omega_0\sqrt{1 - \zeta^2 t}\right) \qquad \textbf{7.20}$$

where A_1 and A_2, like K_1 and K_2, are constants, which are evaluated using the initial conditions $x(0)$ and $dx(0)/dt$. This illustrates that the natural response is an exponentially damped oscillatory response.

Case 3, $\zeta = 1$ This case, called *critically damped*, results in

$$s_1 = s_2 = -\zeta\omega_0$$

In the case where the characteristic equation has repeated roots, the general solution is of the form

$$x_c(t) = B_1 e^{-\zeta\omega_0 t} + B_2 t e^{-\zeta\omega_0 t} \qquad \textbf{7.21}$$

where B_1 and B_2 are constants derived from the initial conditions.

It is informative to sketch the natural response for the three cases we have discussed: overdamped, Eq. (7.19); underdamped, Eq. (7.20); and critically damped, Eq. (7.21). **Figure 7.15** graphically illustrates the three cases for the situations in which $x_c(0) = 0$. Note that the critically damped response peaks and decays faster than the overdamped response. The underdamped response is an exponentially damped sinusoid whose rate of decay is dependent on the factor ζ. Actually, the terms $\pm e^{-\zeta\omega_0 t}$ define what is called the *envelope* of the response, and the damped oscillations (i.e., the oscillations of decreasing amplitude) exhibited by the waveform in **Fig. 7.15b** are called *ringing*.

LEARNING ASSESSMENTS

E7.12 A parallel *RLC* circuit has the following circuit parameters: $R = 1\ \Omega$, $L = 2$ H, and $C = 2$ F. Compute the damping ratio and the undamped natural frequency of this network.

ANSWER:
$\zeta = 0.5$;
$\omega_0 = 0.5$ rad/s.

E7.13 A series *RLC* circuit consists of $R = 2\ \Omega$, $L = 1$ H, and a capacitor. Determine the type of response exhibited by the network if (a) $C = 1/2$ F, (b) $C = 1$ F, and (c) $C = 2$ F.

ANSWER:
(a) underdamped;
(b) critically damped;
(c) overdamped.

THE NETWORK RESPONSE We will now analyze a number of simple *RLC* networks that contain both nonzero initial conditions and constant forcing functions. Circuits that exhibit overdamped, underdamped, and critically damped responses will be considered.

PROBLEM-SOLVING STRATEGY

SECOND-ORDER TRANSIENT CIRCUITS

STEP 1. Write the differential equation that describes the circuit.

STEP 2. Derive the characteristic equation, which can be written in the form $s^2 + 2\zeta\omega_0 s + \omega_0^2 = 0$, where ζ is the damping ratio and ω_0 is the undamped natural frequency.

STEP 3. The two roots of the characteristic equation will determine the type of response. If the roots are real and unequal (i.e., $\zeta > 1$), the network response is overdamped. If the roots are real and equal (i.e., $\zeta = 1$), the network response is critically damped. If the roots are complex (i.e., $\zeta < 1$), the network response is underdamped.

STEP 4. The damping condition and corresponding response for the aforementioned three cases outlined are as follows:

Overdamped: $x(t) = K_1 e^{-(\zeta\omega_0 - \omega_0\sqrt{\zeta^2-1})t} + K_2 e^{-(\zeta\omega_0 + \omega_0\sqrt{\zeta^2-1})t}$

Critically damped: $x(t) = B_1 e^{-\zeta\omega_0 t} + B_2 t e^{-\zeta\omega_0 t}$

Underdamped: $x(t) = e^{-\sigma t}(A_1 \cos \omega_d t + A_2 \sin \omega_d t)$, where $\sigma = \zeta\omega_0$, and $\omega_d = \omega_0\sqrt{1 - \zeta^2}$

STEP 5. Two initial conditions, either given or derived, are required to obtain the two unknown coefficients in the response equation.

The following examples will demonstrate the analysis techniques.

EXAMPLE 7.7

Consider the parallel *RLC* circuit shown in Fig. 7.16. The second-order differential equation that describes the voltage $v(t)$ is

$$\frac{d^2v}{dt^2} + \frac{1}{RC}\frac{dv}{dt} + \frac{v}{LC} = 0$$

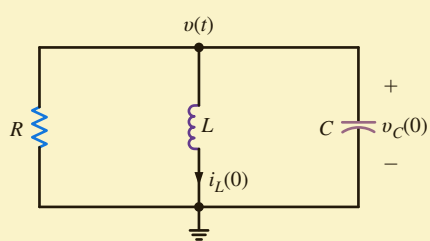

Figure 7.16
Parallel *RLC* circuit.

A comparison of this equation with Eqs. (7.14) and (7.15) indicates that for the parallel *RLC* circuit the damping term is $1/2\,RC$ and the undamped natural frequency is $1/\sqrt{LC}$. If the circuit parameters are $R = 2\ \Omega$, $C = 1/5$ F, and $L = 5$ H, the equation becomes

$$\frac{d^2v}{dt^2} + 2.5\frac{dv}{dt} + v = 0$$

Let us assume that the initial conditions on the storage elements are $i_L(0) = -1$ A and $v_C(0) = 4$ V. Let us find the node voltage $v(t)$ and the inductor current.

SOLUTION The characteristic equation for the network is

$$s^2 + 2.5s + 1 = 0$$

and the roots are

$$s_1 = -0.5$$
$$s_2 = -2$$

Since the roots are real and unequal, the circuit is overdamped, and $v(t)$ is of the form

$$v(t) = K_1e^{-2t} + K_2e^{-0.5t}$$

The initial conditions are now employed to determine the constants K_1 and K_2. Since $v(t) = v_C(t)$,

$$v_C(0) = v(0) = 4 = K_1 + K_2$$

The second equation needed to determine K_1 and K_2 is normally obtained from the expression

$$\frac{dv(t)}{dt} = -2K_1e^{-2t} - 0.5K_2e^{-0.5t}$$

However, the second initial condition is not $dv(0)/dt$. If this were the case, we would simply evaluate the equation at $t = 0$. This would produce a second equation in the unknowns K_1 and K_2. We can, however, circumvent this problem by noting that the node equation for the circuit can be written as

$$C\frac{dv(t)}{dt} + \frac{v(t)}{R} + i_L(t) = 0$$

or

$$\frac{dv(t)}{dt} = \frac{-1}{RC}v(t) - \frac{i_L(t)}{C}$$

At $t = 0$,

$$\begin{aligned}\frac{dv(0)}{dt} &= \frac{-1}{RC}v(0) - \frac{1}{C}i_L(0)\\ &= -2.5(4) - 5(-1)\\ &= -5\end{aligned}$$

However, since

$$\frac{dv(t)}{dt} = -2K_1e^{-2t} - 0.5K_2e^{-0.5t}$$

then when $t = 0$

$$-5 = -2K_1 - 0.5K_2$$

This equation, together with the equation

$$4 = K_1 + K_2$$

produces the constants $K_1 = 2$ and $K_2 = 2$. Therefore, the final equation for the voltage is

$$v(t) = 2e^{-2t} + 2e^{-0.5t}\,\text{V}$$

Note that the voltage equation satisfies the initial condition $v(0) = 4$ V. The response curve for this voltage $v(t)$ is shown in **Fig. 7.17**.

The inductor current is related to $v(t)$ by the equation

$$i_L(t) = \frac{1}{L}\int v(t)\,dt$$

Substituting our expression for $v(t)$ yields

$$i_L(t) = \frac{1}{5}\int [2e^{-2t} + 2e^{-0.5t}]\,dt$$

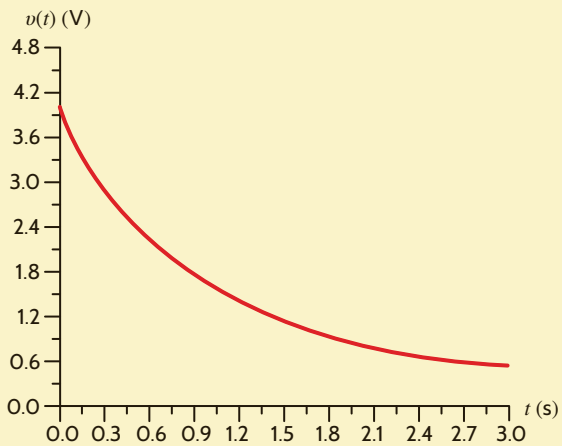

Figure 7.17
Overdamped response.

or

$$i_L(t) = -\frac{1}{5}e^{-2t} - \frac{4}{5}e^{-0.5t}\text{A}$$

Note that in comparison with the *RL* and *RC* circuits, the response of this *RLC* circuit is controlled by two time constants. The first term has a time constant of 1/2 s, and the second term has a time constant of 2 s.

EXAMPLE 7.8

The series *RLC* circuit shown in **Fig. 7.18** has the following parameters: $C = 0.04$ F, $L = 1$ H, $R = 6\ \Omega$, $i_L(0) = 4$ A, and $v_C(0) = -4$ V. The equation for the current in the circuit is given by the expression

$$\frac{d^2i}{dt^2} + \frac{R}{L}\frac{di}{dt} + \frac{i}{LC} = 0$$

A comparison of this equation with Eqs. (7.14) and (7.15) illustrates that for a series *RLC* circuit the damping term is $R/2L$ and the undamped natural frequency is $1/\sqrt{LC}$. Substituting the circuit element values into the preceding equation yields

$$\frac{d^2i}{dt^2} + 6\frac{di}{dt} + 25i = 0$$

Let us determine the expression for both the current and the capacitor voltage.

SOLUTION

The characteristic equation is then

$$s^2 + 6s + 25 = 0$$

and the roots are

$$s_1 = -3 + j4$$
$$s_2 = -3 - j4$$

Since the roots are complex, the circuit is underdamped, and the expression for $i(t)$ is

$$i(t) = K_1e^{-3t}\cos 4t + K_2e^{-3t}\sin 4t$$

Using the initial conditions, we find that

$$i(0) = 4 = K_1$$

and

$$\frac{di}{dt} = -4K_1e^{-3t}\sin 4t - 3K_1e^{-3t}\cos 4t + 4K_2e^{-3t}\cos 4t - 3K_2e^{-3t}\sin 4t$$

Figure 7.18
Series *RLC* circuit.

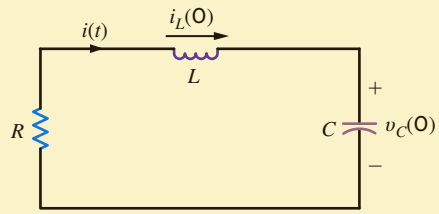

and thus

$$\frac{di(0)}{dt} = -3K_1 + 4K_2$$

Although we do not know $di(0)/dt$, we can find it via KVL. From the circuit we note that

$$Ri(0) + L\frac{di(0)}{dt} + v_C(0) = 0$$

or

$$\begin{aligned}\frac{di(0)}{dt} &= -\frac{R}{L}i(0) - \frac{v_C(0)}{L}\\ &= -\frac{6}{1}(4) + \frac{4}{1}\\ &= -20\end{aligned}$$

Therefore,

$$-3K_1 + 4K_2 = -20$$

and since $K_1 = 4$, $K_2 = -2$, the expression then for $i(t)$ is

$$i(t) = 4e^{-3t}\cos 4t - 2e^{-3t}\sin 4t \text{ A}$$

Note that this expression satisfies the initial condition $i(0) = 4$. The voltage across the capacitor could be determined via KVL using this current:

$$Ri(t) + L\frac{di(t)}{dt} + v_C(t) = 0$$

or

$$v_C(t) = -Ri(t) - L\frac{di(t)}{dt}$$

Substituting the preceding expression for $i(t)$ into this equation yields

$$v_C(t) = -4e^{-3t}\cos 4t + 22e^{-3t}\sin 4t \text{ V}$$

Note that this expression satisfies the initial condition $v_C(0) = -4$ V.

A plot of the function is shown in **Fig. 7.19**:

Figure 7.19
Underdamped response.

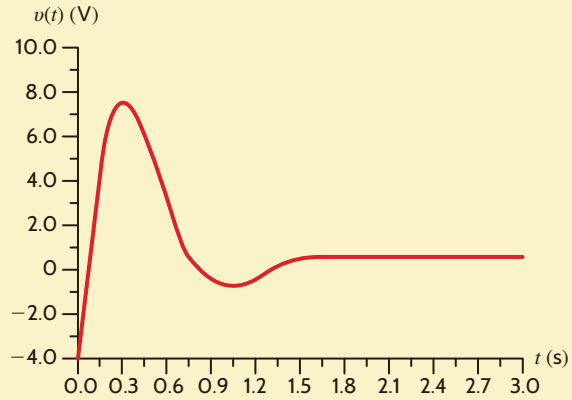

EXAMPLE 7.9

Let us examine the circuit in Fig. 7.20, which is slightly more complicated than the two we have already considered.

SOLUTION

The two equations that describe the network are

$$L\frac{di(t)}{dt} + R_1 i(t) + v(t) = 0$$

$$i(t) = C\frac{dv(t)}{dt} + \frac{v(t)}{R_2}$$

Substituting the second equation into the first yields

$$\frac{d^2v}{dt^2} + \left(\frac{1}{R_2C} + \frac{R_1}{L}\right)\frac{dv}{dt} + \frac{R_1 + R_2}{R_2LC}v = 0$$

If the circuit parameters and initial conditions are

$$R_1 = 10\ \Omega \qquad C = \frac{1}{8}\text{ F} \qquad v_C(0) = 1\text{ V}$$
$$R_2 = 8\ \Omega \qquad L = 2\text{ H} \qquad i_L(0) = \frac{1}{2}\text{ A}$$

the differential equation becomes

$$\frac{d^2v}{dt^2} + 6\frac{dv}{dt} + 9v = 0$$

We wish to find expressions for the current $i(t)$ and the voltage $v(t)$.

The characteristic equation is then

$$s^2 + 6s + 9 = 0$$

and hence the roots are

$$s_1 = -3$$
$$s_2 = -3$$

Since the roots are real and equal, the circuit is critically damped. The term $v(t)$ is then given by the expression

$$v(t) = K_1e^{-3t} + K_2te^{-3t}$$

Since $v(t) = v_C(t)$,

$$v(0) = v_C(0) = 1 = K_1$$

In addition,

$$\frac{dv(t)}{dt} = -3K_1e^{-3t} + K_2e^{-3t} - 3K_2te^{-3t}$$

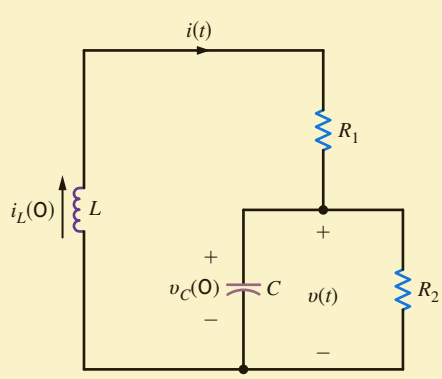

Figure 7.20
Series-parallel RLC circuit.

However,

$$\frac{dv(t)}{dt} = \frac{i(t)}{C} - \frac{v(t)}{R_2C}$$

Setting these two expressions equal to one another and evaluating the resultant equation at $t = 0$ yields

$$\frac{1/2}{1/8} - \frac{1}{1} = -3K_1 + K_2$$

$$3 = -3K_1 + K_2$$

$K_1 = 1$, $K_2 = 6$, and the expression for $v(t)$ is

$$v(t) = e^{-3t} + 6te^{-3t}\,\text{V}$$

Note that the expression satisfies the initial condition $v(0) = 1$.

The current $i(t)$ can be determined from the nodal analysis equation at $v(t)$:

$$i(t) = C\frac{dv(t)}{dt} + \frac{v(t)}{R_2}$$

Substituting $v(t)$ from the preceding equation, we find

$$i(t) = \frac{1}{8}[-3e^{-3t} + 6e^{-3t} - 18te^{-3t}] + \frac{1}{8}[e^{-3t} + 6te^{-3t}]$$

or

$$i(t) = \frac{1}{2}e^{-3t} - \frac{3}{2}te^{-3t}\,\text{A}$$

If this expression for the current is employed in the circuit equation,

$$v(t) = -L\frac{di(t)}{dt} - R_1i(t)$$

we obtain

$$v(t) = e^{-3t} + 6te^{-3t}\,\text{V}$$

which is identical to the expression derived earlier.

A plot of this critically damped function is shown in **Fig. 7.21**.

Figure 7.21

Critically damped response.

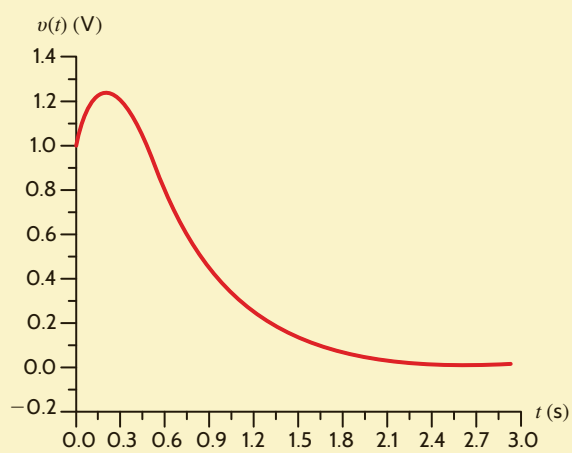

LEARNING ASSESSMENTS

E7.14 The switch in the network in Fig. E7.14 opens at $t = 0$. Find $i(t)$ for $t > 0$.

ANSWER:
$i(t) = -2e^{-t/2} + 4e^{-t}$ A.

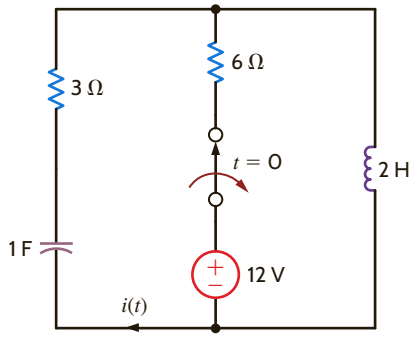

Figure E7.14

E7.15 The switch in the network in Fig. E7.15 moves from position 1 to position 2 at $t = 0$. Find $v_o(t)$ for $t > 0$.

ANSWER:
$v_o(t) = 2(e^{-t} - 3e^{-3t})$ V.

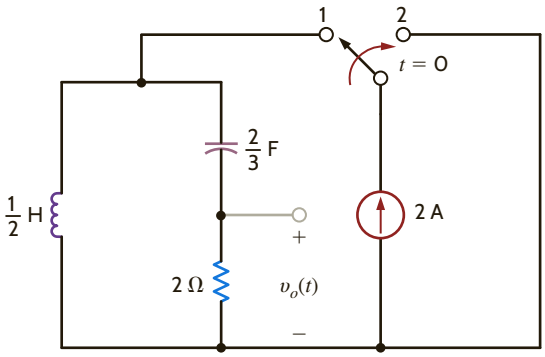

Figure E7.15

E7.16 Find $v_C(t)$ for $t > 0$ in Fig. E7.16.

ANSWER:
$v_C(t) = -2e^{-2t}$
$\cos t - 1.5e^{-2t} \sin t + 24$ V.

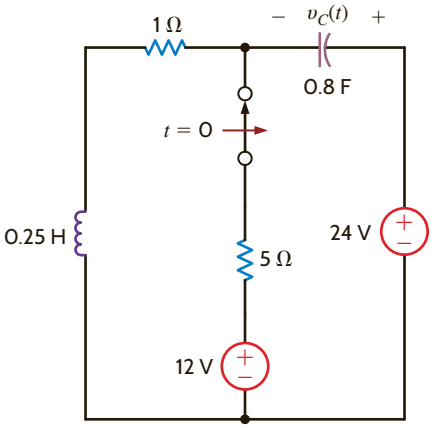

Figure E7.16

EXAMPLE 7.10

Consider the circuit shown in Fig. 7.22. This circuit is the same as the one analyzed in Example 7.8, except that a constant forcing function is present. The circuit parameters are the same as those used in Example 7.8:

$$C = 0.04 \text{ F} \qquad i_L(0) = 4 \text{ A}$$
$$L = 1 \text{ H} \qquad v_C(0) = -4 \text{ V}$$
$$R = 6\ \Omega$$

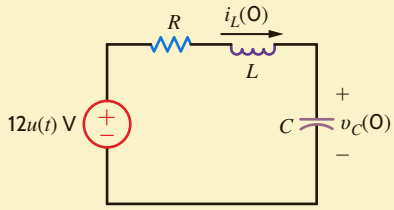

Figure 7.22
Series *RLC* circuit with a step function input.

We want to find an expression for $v_C(t)$ for $t > 0$.

SOLUTION

From our earlier mathematical development we know that the general solution of this problem will consist of a particular solution plus a complementary solution. From Example 7.8 we know that the complementary solution is of the form $K_3e^{-3t}\cos 4t + K_4e^{-3t}\sin 4t$. The particular solution is a constant, since the input is a constant and therefore the general solution is

$$v_C(t) = K_3e^{-3t}\cos 4t + K_4e^{-3t}\sin 4t + K_5$$

An examination of the circuit shows that in the steady state, the final value of $v_C(t)$ is 12 V, since in the steady-state condition, the inductor is a short circuit and the capacitor is an open circuit. Thus, $K_5 = 12$. The steady-state value could also be immediately calculated from the differential equation. The form of the general solution is then

$$v_C(t) = K_3e^{-3t}\cos 4t + K_4e^{-3t}\sin 4t + 12$$

The initial conditions can now be used to evaluate the constants K_3 and K_4:

$$v_C(0) = -4 = K_3 + 12$$
$$-16 = K_3$$

Since the derivative of a constant is zero, the results of Example 7.8 show that

$$\frac{dv_C(0)}{dt} = \frac{i(0)}{C} = 100 = -3K_3 + 4K_4$$

and since $K_3 = -16$, $K_4 = 13$. Therefore, the general solution for $v_C(t)$ is

$$v_C(t) = 12 - 16e^{-3t}\cos 4t + 13e^{-3t}\sin 4t \text{ V}$$

Note that this equation satisfies the initial condition $v_C(0) = -4$ and the final condition $v_C(\infty) = 12$ V.

EXAMPLE 7.11

Let us examine the circuit shown in Fig. 7.23. A close examination of this circuit will indicate that it is identical to that shown in Example 7.9 except that a constant forcing function is present. We assume the circuit is in steady state at $t = 0-$. The equations that describe the circuit for $t > 0$ are

$$L\frac{di(t)}{dt} + R_1 i(t) + v(t) = 24$$

$$i(t) = C\frac{dv(t)}{dt} + \frac{v(t)}{R_2}$$

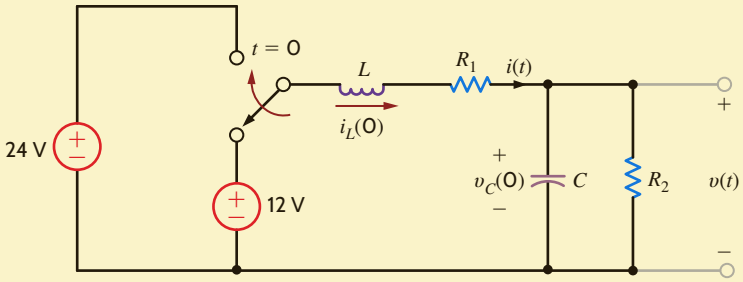

Figure 7.23
Series-parallel *RLC* circuit with a constant forcing function.

Combining these equations, we obtain

$$\frac{d^2v(t)}{dt^2} + \left(\frac{1}{R_2C} + \frac{R_1}{L}\right)\frac{dv(t)}{dt} + \frac{R_1 + R_2}{R_2LC}v(t) = \frac{24}{LC}$$

If the circuit parameters are $R_1 = 10\ \Omega$, $R_2 = 2\ \Omega$, $L = 2$ H, and $C = 1/4$ F, the differential equation for the output voltage reduces to

$$\frac{d^2v(t)}{dt^2} + 7\frac{dv(t)}{dt} + 12v(t) = 48$$

Let us determine the output voltage $v(t)$.

The characteristic equation is

$$s^2 + 7s + 12 = 0$$

and hence the roots are

$$s_1 = -3$$
$$s_2 = -4$$

The circuit response is overdamped, and therefore the general solution is of the form

$$v(t) = K_1e^{-3t} + K_2e^{-4t} + K_3$$

The steady-state value of the voltage, K_3, can be computed from **Fig. 7.24a**. Note that

$$v(\infty) = 4\text{ V} = K_3$$

The initial conditions can be calculated from **Figs. 7.24b** and **c**, which are valid at $t = 0-$ and $t = 0+$, respectively. Note that $v(0+) = 2$ V and, hence, from the response equation

$$v(0+) = 2\text{ V} = K_1 + K_2 + 4$$
$$-2 = K_1 + K_2$$

Fig. 7.24c illustrates that $i(0+) = 1$. From the response equation we see that

$$\frac{dv(0)}{dt} = -3K_1 - 4K_2$$

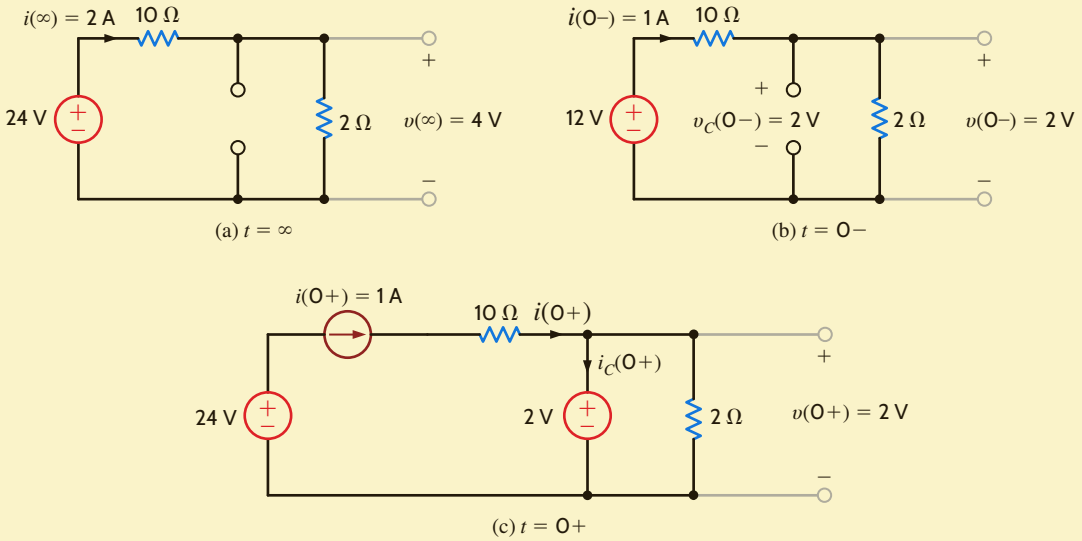

Figure 7.24
Equivalent circuits at $t = \infty$, $t = 0-$, and $t = 0+$ for the circuit in Fig. 7.23.

Since

$$\frac{dv(0)}{dt} = \frac{i(0)}{C} - \frac{v(0)}{R_2C}$$
$$= 4 - 4$$
$$= 0$$

then

$$0 = -3K_1 - 4K_2$$

Solving the two equations for K_1 and K_2 yields $K_1 = -8$ and $K_2 = 6$. Therefore, the general solution for the voltage response is

$$v(t) = 4 - 8e^{-3t} + 6e^{-4t}\text{ V}$$

Note that this equation satisfies both the initial and final values of $v(t)$.

LEARNING ASSESSMENTS

E7.17 The switch in the network in Fig. E7.17 moves from position 1 to position 2 at $t = 0$. Compute $i_o(t)$ for $t > 0$ and use this current to determine $v_o(t)$ for $t > 0$.

ANSWER:
$i_o(t) = -\frac{11}{6}e^{-3t} + \frac{14}{6}e^{-6t}$A;
$v_o(t) = 12 + 18i_o(t)$ V.

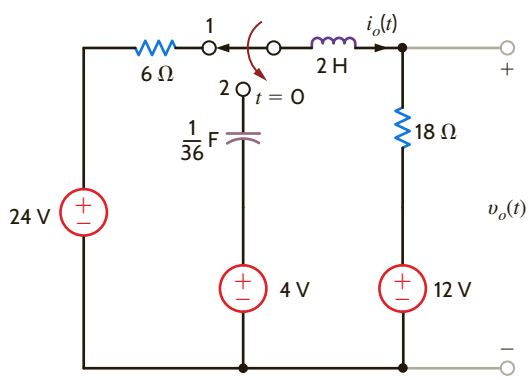

Figure E7.17

E7.18 Find $i(t)$ for $t > 0$ in Fig. E7.18.

ANSWER:
$i(t) = 0.4144e^{-17.07t}$
$- 2.414e^{-2.93t} + 3$ A.

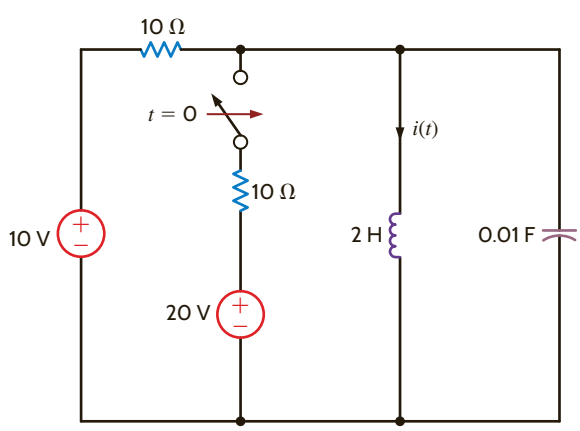

Figure E7.18

SUMMARY

First-Order Circuits

- An *RC* or *RL* transient circuit is said to be first order if it contains only a single capacitor or single inductor. The voltage or current anywhere in the network can be obtained by solving a first-order differential equation.
- The form of a first-order differential equation with a constant forcing function is

$$\frac{dx(t)}{dt} + \frac{x(t)}{\tau} = A$$

and the solution is

$$x(t) = A\tau + K_2 e^{-t/\tau}$$

where $A\tau$ is referred to as the steady-state solution and τ is called the time constant.

- The function $e^{-t/\tau}$ decays to a value that is less than 1% of its initial value after a period of 5τ. Therefore, the time constant, τ, determines the time required for the circuit to reach steady state.
- The time constant for an *RC* circuit is $R_{\text{Th}}C$ and for an *RL* circuit is L/R_{Th}, where R_{Th} is the Thévenin equivalent resistance looking into the circuit at the terminals of the storage element (i.e., capacitor or inductor).
- The two approaches proposed for solving first-order transient circuits are the differential equation approach and the step-by-step method. In the former case, the differential equation that describes the dynamic behavior of the circuit is solved to determine the desired solution. In the latter case, the initial conditions and the steady-state value of the voltage across the capacitor or current in the inductor are used in conjunction with the circuit's time constant and the known form of the desired variable to obtain a solution.
- The response of a first-order transient circuit to an input pulse can be obtained by treating the pulse as a combination of two step-function inputs.

Second-Order Circuits

- The voltage or current in an *RLC* transient circuit can be described by a constant coefficient differential equation of the form

$$\frac{d^2x(t)}{dt^2} + 2\zeta\omega_0\frac{dx(t)}{dt} + \omega_0^2 x(t) = f(t)$$

where $f(t)$ is the network forcing function.

- The characteristic equation for a second-order circuit is $s^2 + 2\zeta\omega_0 s + \omega_0^2 = 0$, where ζ is the damping ratio and ω_0 is the undamped natural frequency.
- If the two roots of the characteristic equation are
  - real and unequal, then $\zeta > 1$ and the network response is overdamped.
  - real and equal, then $\zeta = 1$ and the network response is critically damped.
  - complex conjugates, then $\zeta < 1$ and the network response is underdamped.
- The three types of damping together with the corresponding network response are as follows:
  1. Overdamped: $x(t) = K_1 e^{-(\zeta\omega_0 - \omega_0\sqrt{\zeta^2-1})t} + K_2 e^{-(\zeta\omega_0 + \omega_0\sqrt{\zeta^2-1})t}$
  2. Critically damped: $x(t) = B_1 e^{-\zeta\omega_0 t} + B_2 t e^{-\zeta\omega_0 t}$
  3. Underdamped: $x(t) = e^{-\sigma t}(A_1\cos\omega_d t + A_2\sin\omega_d t)$, where $\sigma = \zeta\omega_0$ and $\omega_d = \omega_0\sqrt{1-\zeta^2}$
- Two initial conditions are required to derive the two unknown coefficients in the network response equations.

PROBLEMS

7.1 Use the differential equation approach to find $i(t)$ for $t > 0$ in the network in Fig. P7.1.

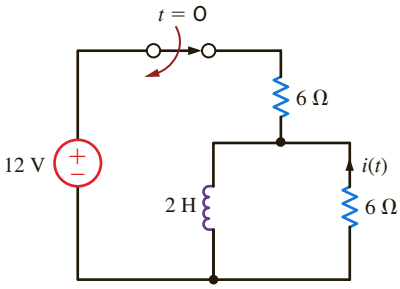

Figure P7.1

7.2 Use the differential equation approach to find $i_o(t)$ for $t > 0$ in the network in Fig. P7.2.

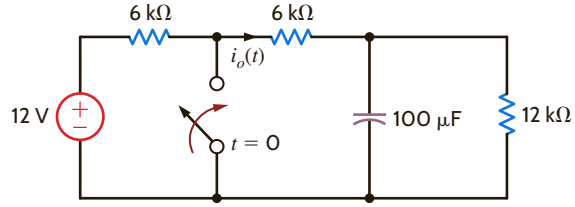

Figure P7.2

7.3 Use the differential equation approach to find $v_o(t)$ for $t > 0$ in the network in Fig. P7.3.

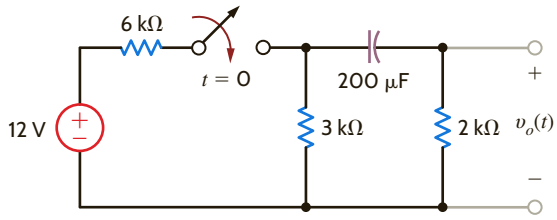

Figure P7.3

7.4 Use the differential equation approach to find $i_o(t)$ for $t > 0$ in the network in Fig. P7.4.

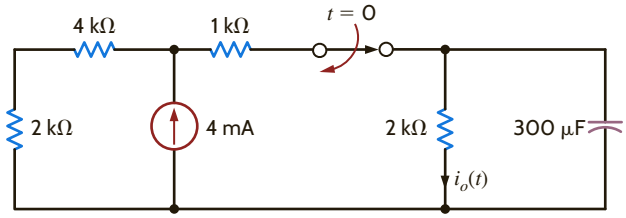

Figure P7.4

7.5 Use the differential equation approach to find $v_o(t)$ for $t > 0$ in the circuit in Fig. P7.5 and plot the response, including the time interval just prior to switch action.

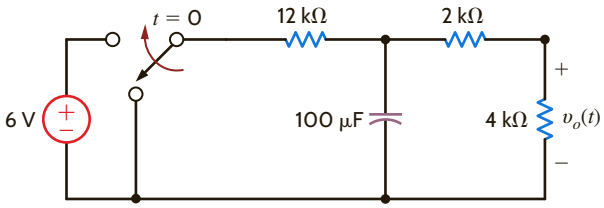

Figure P7.5

7.6 Use the differential equation approach to find $v_C(t)$ for $t > 0$ in the circuit in Fig. P7.6 and plot the response, including the time interval just prior to closing the switch.

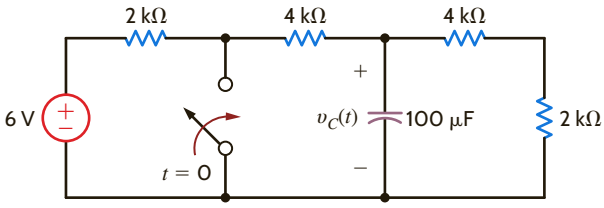

Figure P7.6

7.7 Use the differential equation approach to find $i_o(t)$ for $t > 0$ in the circuit in Fig. P7.7 and plot the response, including the time interval just prior to closing the switch.

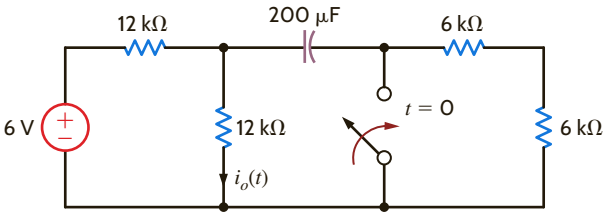

Figure P7.7

7.8 Use the differential equation approach to find $v_o(t)$ for $t > 0$ in the circuit in Fig. P7.8 and plot the response, including the time interval just prior to opening the switch.

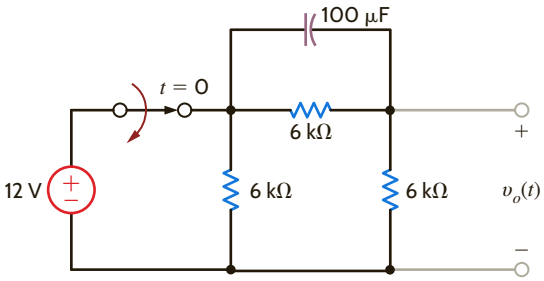

Figure P7.8

7.9 Use the differential equation approach to find $v_C(t)$ for $t > 0$ in the circuit in Fig. P7.9.

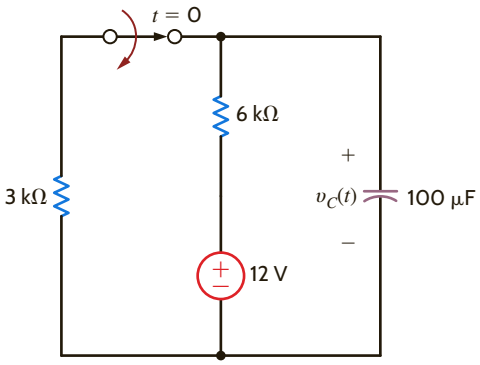

Figure P7.9

7.10 Use the differential equation approach to find $v_C(t)$ for $t > 0$ in the circuit in Fig. P7.10.

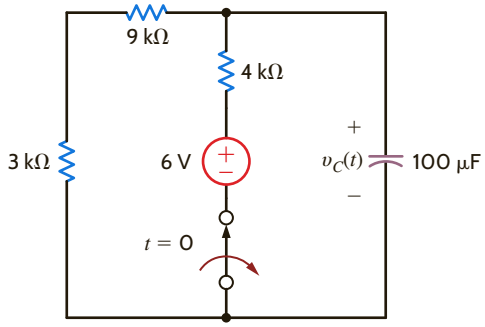

Figure P7.10

7.11 Use the differential equation approach to find $i_o(t)$ for $t > 0$ in the circuit in Fig. P7.11 and plot the response, including the time interval just prior to opening the switch.

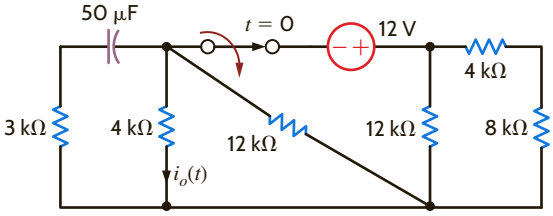

Figure P7.11

7.12 In the network in Fig. P7.12, find $i_o(t)$ for $t > 0$ using the differential equation approach.

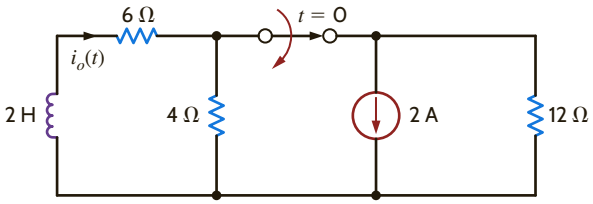

Figure P7.12

7.13 Use the differential equation approach to find $v_o(t)$ for $t > 0$ in the network in Fig. P7.13.

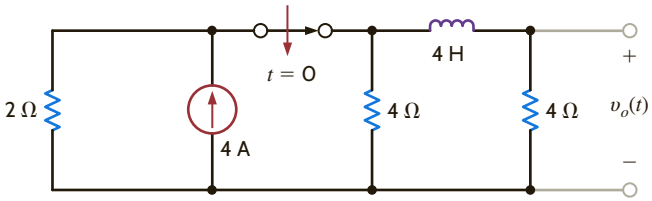

Figure P7.13

7.14 Use the differential equation approach to find $i_L(t)$ for $t > 0$ in the circuit in Fig. P7.14 and plot the response, including the time interval just prior to opening the switch.

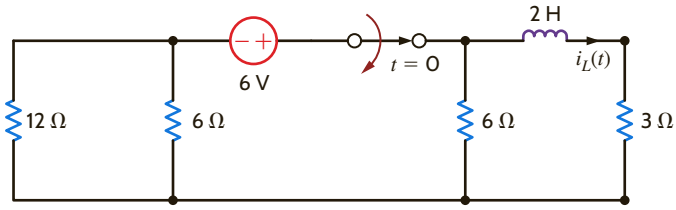

Figure P7.14

7.15 Use the differential equation approach to find $i(t)$ for $t > 0$ in the circuit in Fig. P7.15 and plot the response, including the time interval just prior to opening the switch.

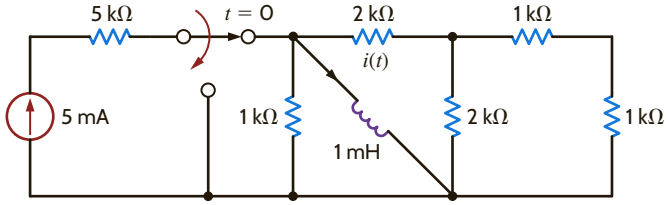

Figure P7.15

7.16 Using the differential equation approach, find $i_o(t)$ for $t > 0$ in the circuit in Fig. P7.16 and plot the response, including the time interval just prior to opening the switch.

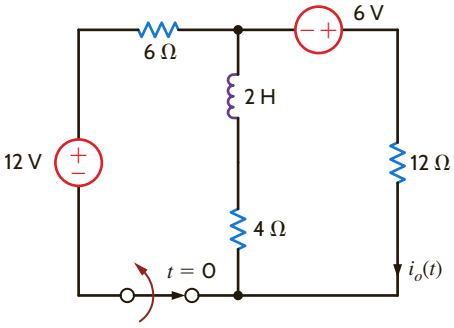

Figure P7.16

7.17 Use the differential equation approach to find $v_o(t)$ for $t > 0$ in the circuit in Fig. P7.17 and plot the response, including the time interval just prior to opening the switch.

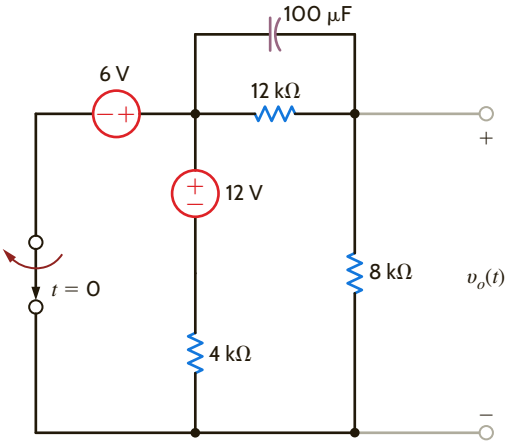

Figure P7.17

7.18 Use the step-by-step technique to find $i_o(t)$ for $t > 0$ in the network in Fig. P7.18.

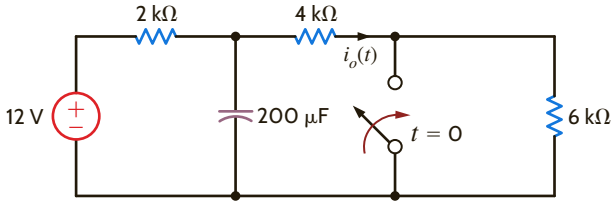

Figure P7.18

7.19 Use the step-by-step method to find $i_o(t)$ for $t > 0$ in the circuit in Fig. P7.19.

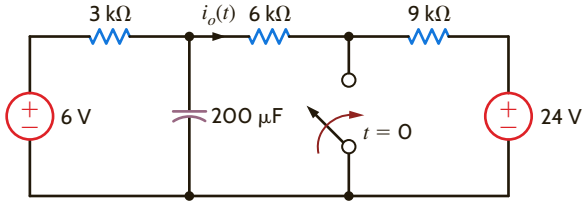

Figure P7.19

7.20 Use the step-by-step method to find $i_o(t)$ for $t > 0$ in the circuit in Fig. P7.20.

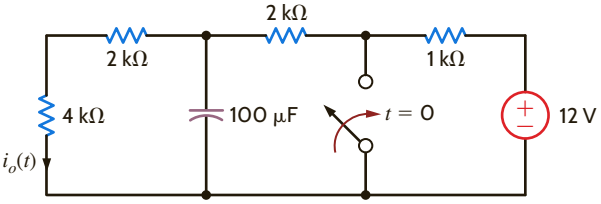

Figure P7.20

7.21 Use the step-by-step method to find $i_o(t)$ for $t > 0$ in the circuit in Fig. P7.21.

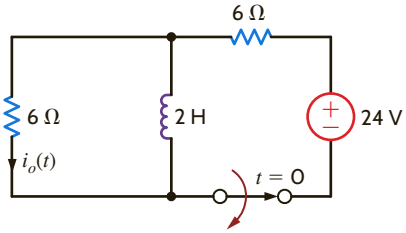

Figure P7.21

7.22 Use the step-by-step method to find $i_o(t)$ for $t > 0$ in the circuit in Fig. P7.22.

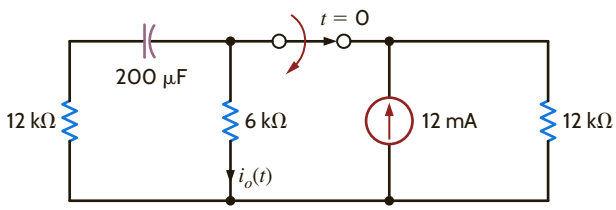

Figure P7.22

7.23 Use the step-by-step technique to find $i_o(t)$ for $t > 0$ in the network in Fig. P7.23.

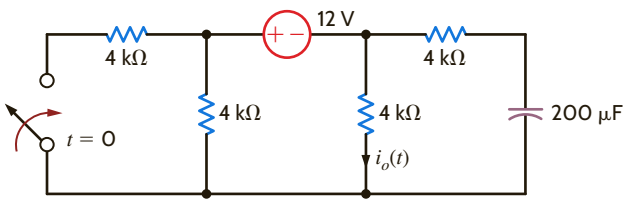

Figure P7.23

7.24 Use the step-by-step method to find $v_o(t)$ for $t > 0$ in the network in Fig. P7.24.

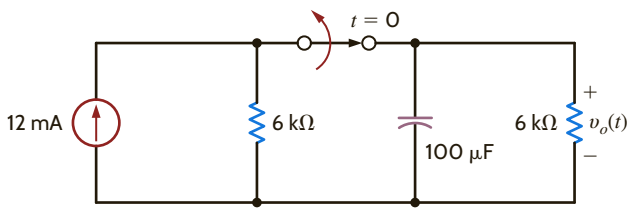

Figure P7.24

7.25 Use the step-by-step method to find $v_o(t)$ for $t > 0$ in the network in Fig. P7.25.

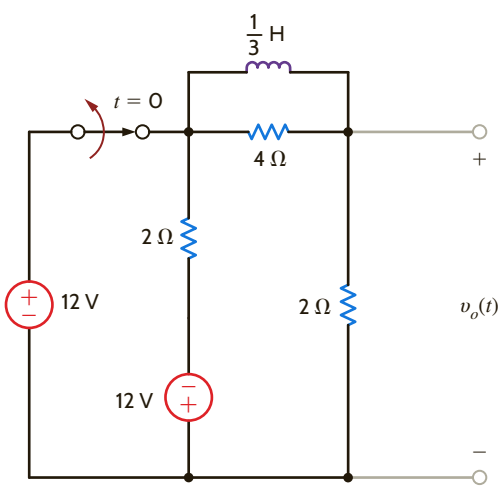

Figure P7.25

7.26 Find $v_C(t)$ for $t > 0$ in the network in Fig. P7.26 using the step-by-step method.

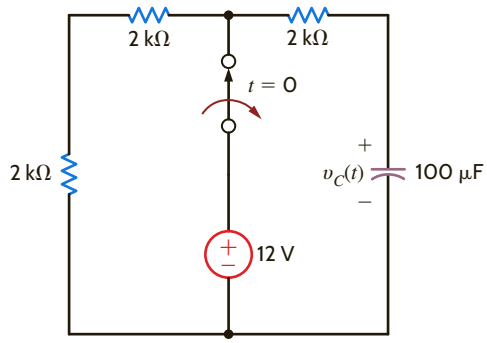

Figure P7.26

7.27 Find $v_o(t)$ for $t > 0$ in the network in Fig. P7.27 using the step-by-step method.

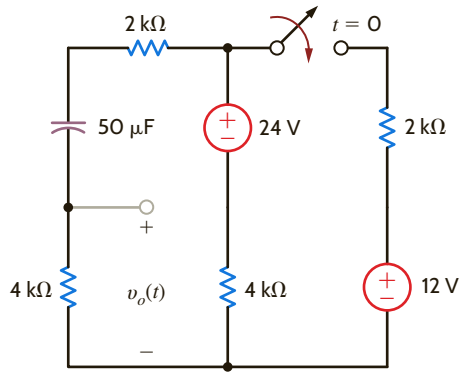

Figure P7.27

7.28 Use the step-by-step method to find $i_o(t)$ for $t > 0$ in the circuit in Fig. P7.28.

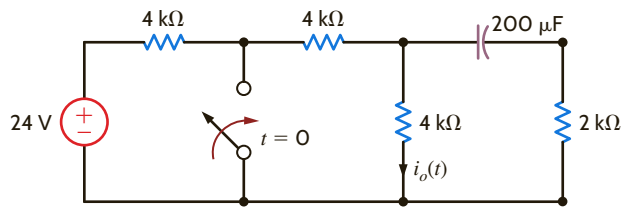

Figure P7.28

7.29 Find $v_o(t)$ for $t > 0$ in the network in Fig. P7.29 using the step-by-step technique.

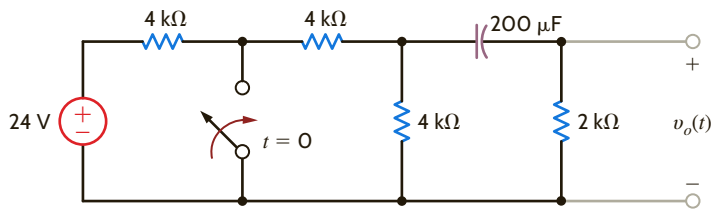

Figure P7.29

7.30 Find $v_o(t)$ for $t > 0$ in the circuit in Fig. P7.30 using the step-by-step method.

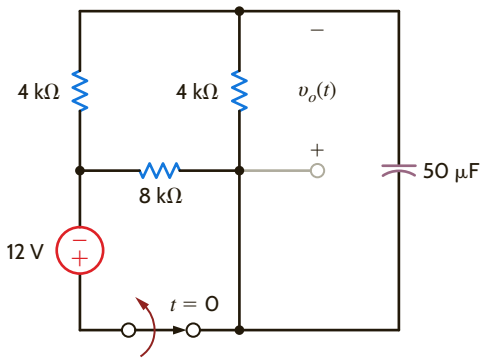

Figure P7.30

7.31 Find $i_o(t)$ for $t > 0$ in the network in Fig. P7.31 using the step-by-step method.

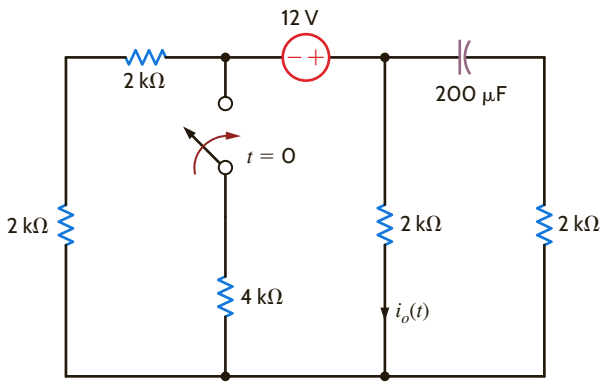

Figure P7.31

7.32 Use the step-by-step technique to find $v_o(t)$ for $t > 0$ in the circuit in Fig. P7.32.

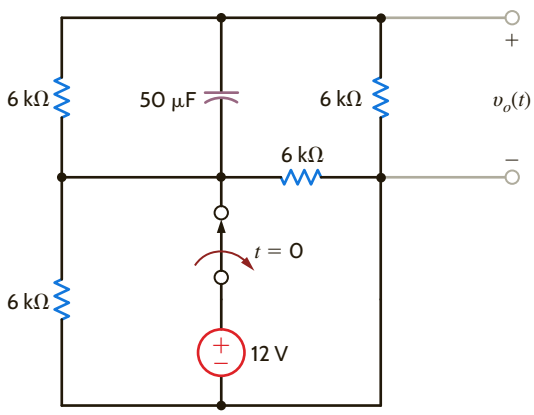

Figure P7.32

7.33 Find $v_C(t)$ for $t > 0$ in the circuit in Fig. P7.33 using the step-by-step method.

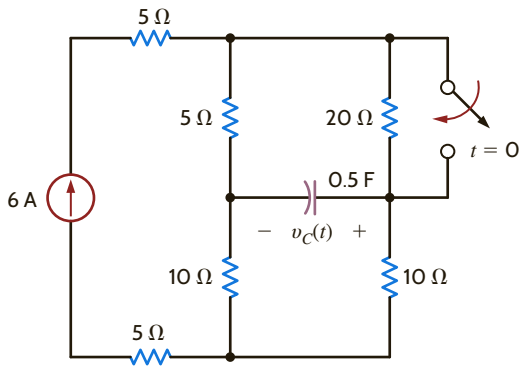

Figure P7.33

7.34 Use the step-by-step method to find $i_o(t)$ for $t > 0$ in the network in Fig. P7.34.

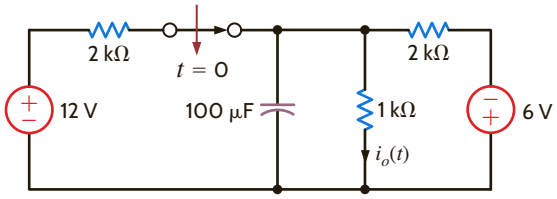

Figure P7.34

7.35 Use the step-by-step method to find $v_o(t)$ for $t > 0$ in the circuit in Fig. P7.35.

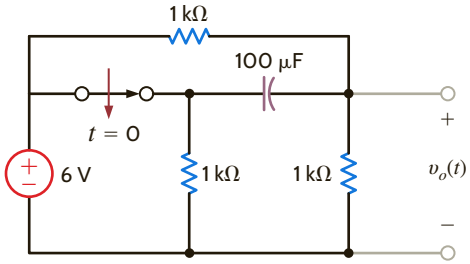

Figure P7.35

7.36 Use the step-by-step method to find $v_o(t)$ for $t > 0$ in the circuit in Fig. P7.36.

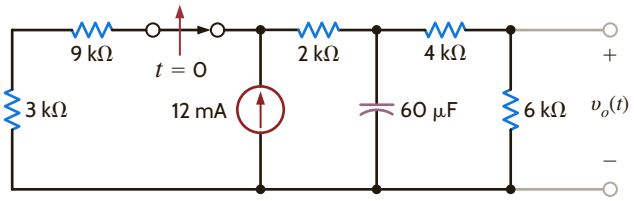

Figure P7.36

7.37 Use the step-by-step method to find $i_o(t)$ for $t > 0$ in the circuit in Fig. P7.37.

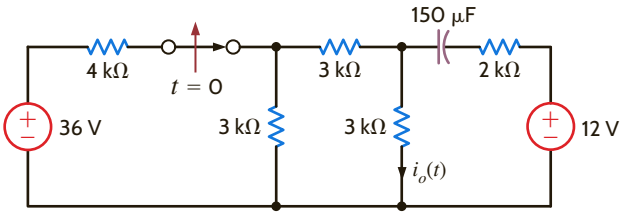

Figure P7.37

7.38 Use the step-by-step method to find $v_o(t)$ for $t > 0$ in the circuit in Fig. P7.38.

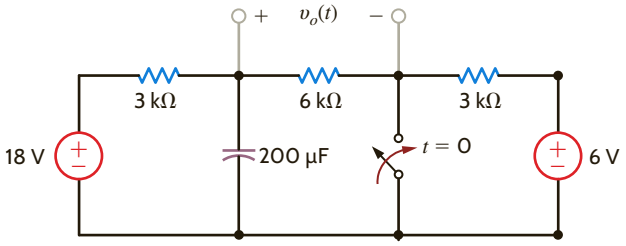

Figure P7.38

7.39 Use the step-by-step method to find $i_o(t)$ for $t > 0$ in the network in Fig. P7.39.

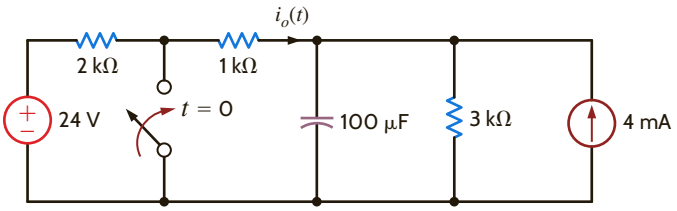

Figure P7.39

7.40 Use the step-by-step method to find $i_o(t)$ for $t > 0$ in the circuit in Fig. P7.40.

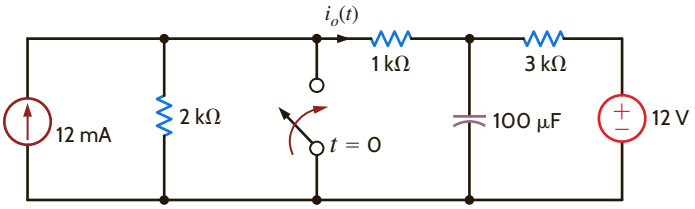

Figure P7.40

7.41 Use the step-by-step method to find $i_o(t)$ for $t > 0$ in the circuit in Fig. P7.41.

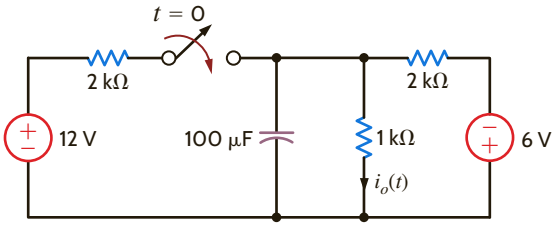

Figure P7.41

7.42 Use the step-by-step method to find $v_o(t)$ for $t > 0$ in the network in Fig. P7.42.

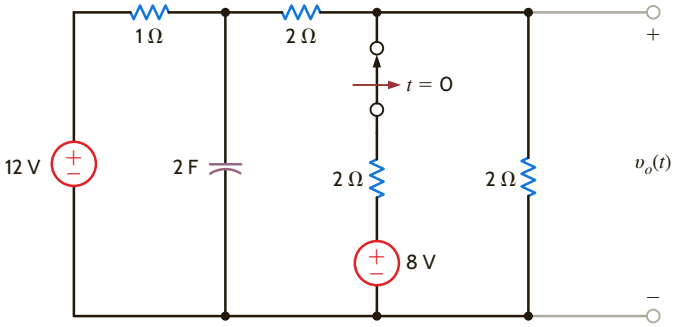

Figure P7.42

7.43 Use the step-by-step method to find $v_o(t)$ for $t > 0$ in the circuit in Fig. P7.43.

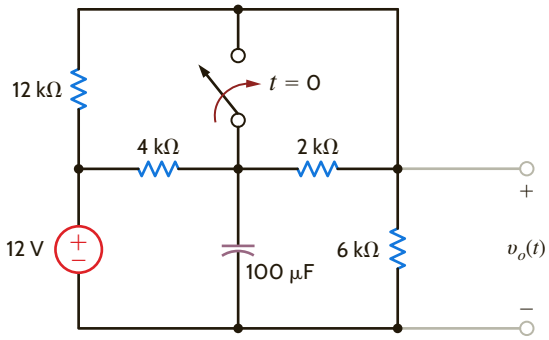

Figure P7.43

7.44 Use the step-by-step method to find $v_o(t)$ for $t > 0$ in the circuit in Fig. P7.44.

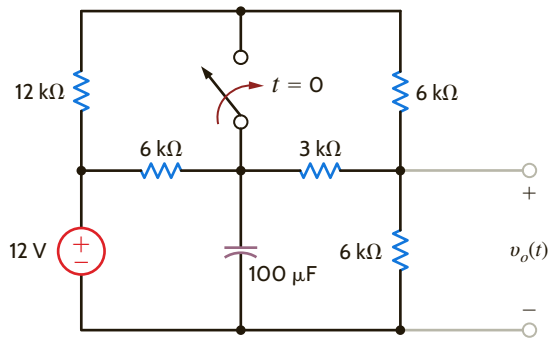

Figure P7.44

7.45 Use the step-by-step method to find $i_o(t)$ for $t > 0$ in the network in Fig. P7.45.

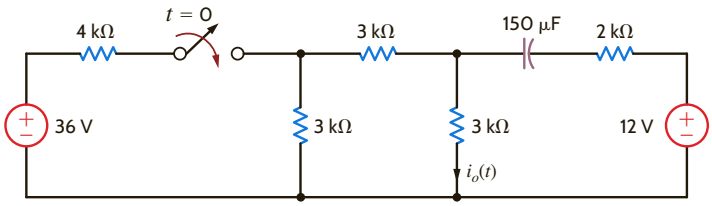

Figure P7.45

7.46 The switch in the circuit in Fig. P7.46 is opened at $t = 0$. Find $v_o(t)$ for $t > 0$ using the step-by-step technique.

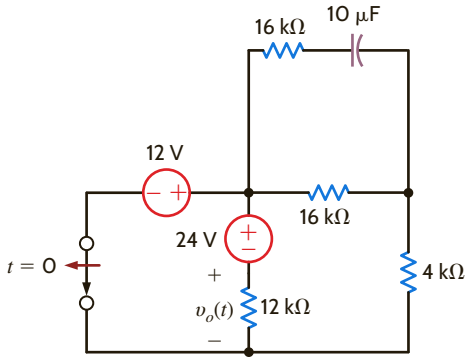

Figure P7.46

7.47 Find $i_o(t)$ for $t > 0$ in the circuit in Fig. P7.47.

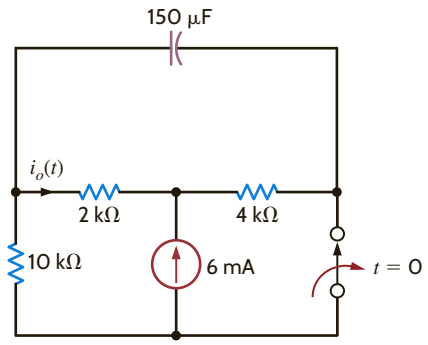

Figure P7.47

7.48 Use the step-by-step method to find $i_o(t)$ for $t > 0$ in the network in Fig. P7.48.

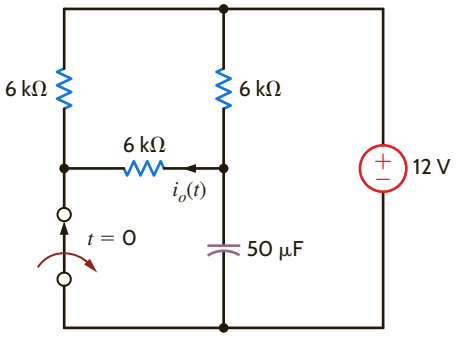

Figure P7.48

7.49 Find $v_o(t)$ for $t > 0$ in the network in Fig. P7.49.

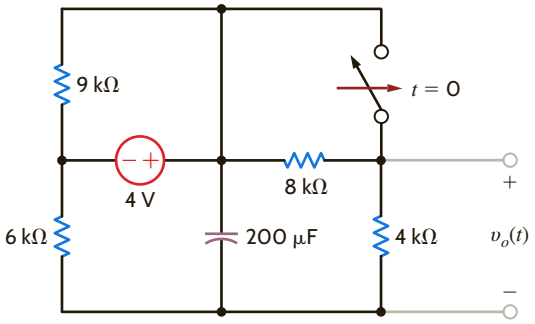

Figure P7.49

7.50 Find $v_o(t)$ for $t > 0$ in the network in Fig. P7.50.

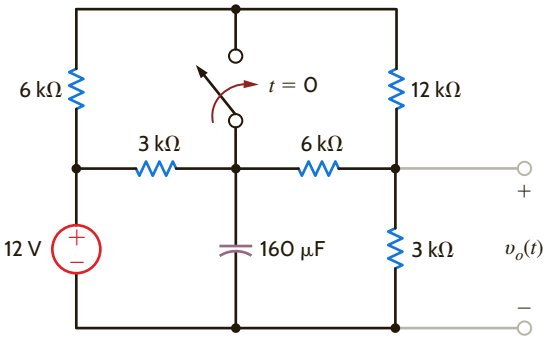

Figure P7.50

7.51 Find $v_o(t)$ for $t > 0$ in the circuit in Fig. P7.51.

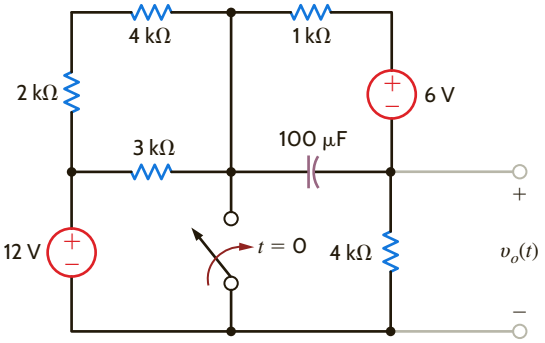

Figure P7.51

7.52 Use the step-by-step technique to find $i_o(t)$ for $t > 0$ in the network in Fig. P7.52.

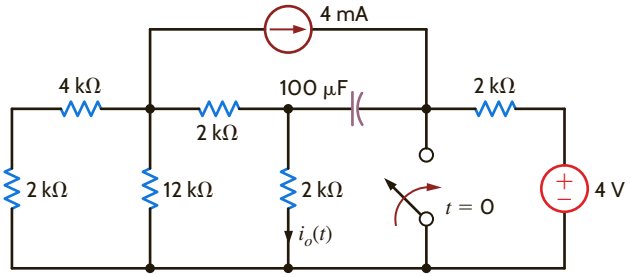

Figure P7.52

7.53 Find $i_o(t)$ for $t > 0$ in the network in Fig. P7.53.

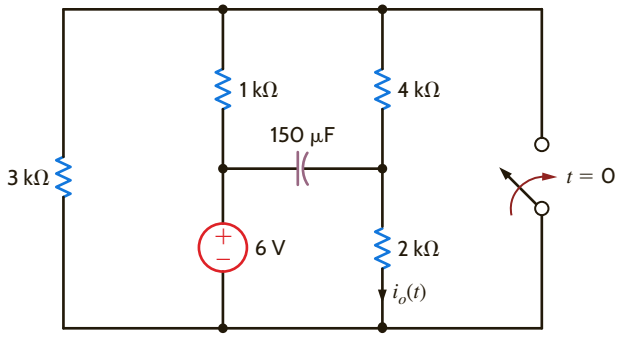

Figure P7.53

7.54 Use the step-by-step technique to find $i_o(t)$ for $t > 0$ in the network in Fig. P7.54.

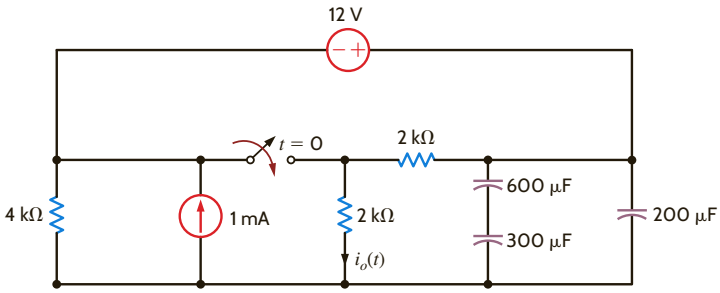

Figure P7.54

7.55 Find $i_o(t)$ for $t > 0$ in the circuit in Fig. P7.55 using the step-by-step technique.

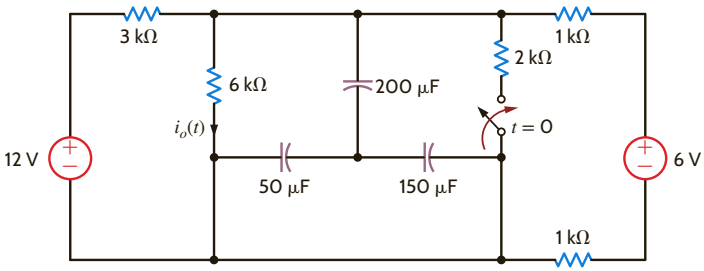

Figure P7.55

7.56 Use the step-by-step method to find $i_o(t)$ for $t > 0$ in the circuit in Fig. P7.56.

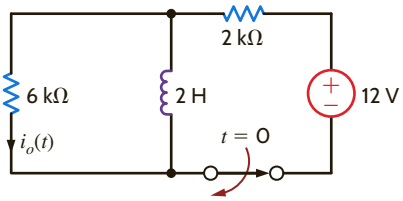

Figure P7.56

7.57 Use the step-by-step method to find $v_o(t)$ for $t > 0$ in the network in Fig. P7.57.

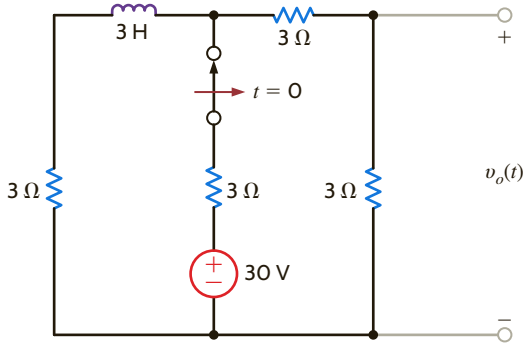

Figure P7.57

7.58 The switch in the circuit in Fig. P7.58 is opened at $t = 0$. Find $i(t)$ for $t > 0$.

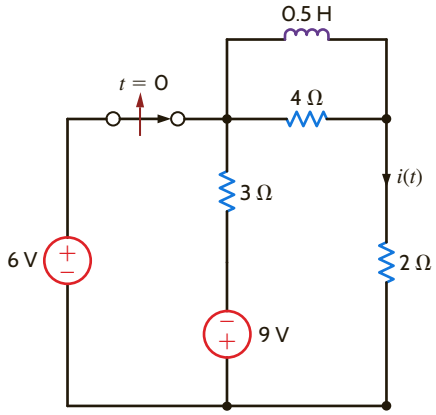

Figure P7.58

7.59 The switch in the circuit in Fig. P7.59 is moved at $t = 0$. Find $i_L(t)$ for $t > 0$ using the step-by-step technique.

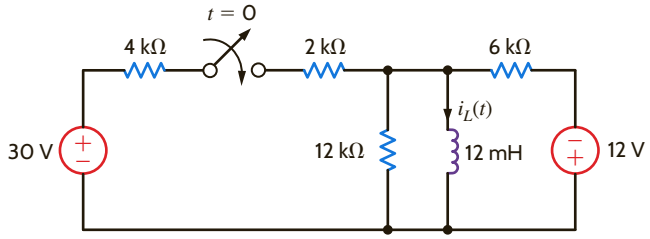

Figure P7.59

7.60 The switch in the circuit in Fig. P7.60 is moved at $t = 0$. Find $i_R(t)$ for $t > 0$ using the step-by-step technique.

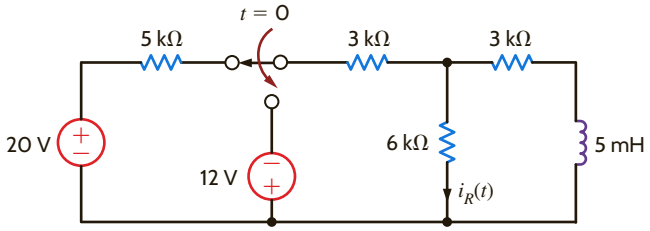

Figure P7.60

7.61 The switch in the circuit in Fig. P7.61 is moved at $t = 0$. Find $i_L(t)$ for $t > 0$ using the step-by-step technique.

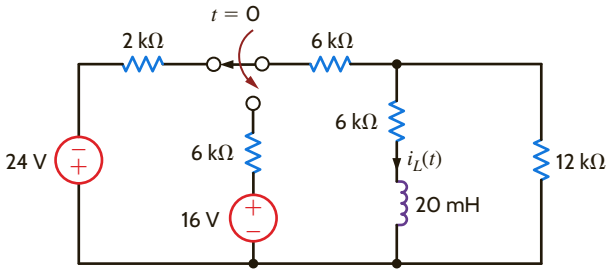

Figure P7.61

7.62 Find $v_o(t)$ for $t > 0$ in the circuit in Fig. P7.62 using the step-by-step method.

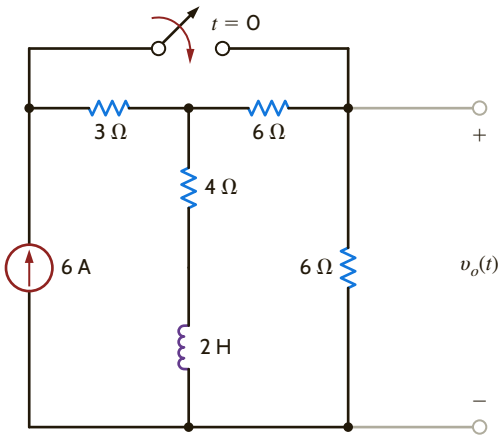

Figure P7.62

7.63 The switch in the circuit in Fig. P7.63 has been closed for a long time and is opened at $t = 0$. Find $i(t)$ for $t > 0$.

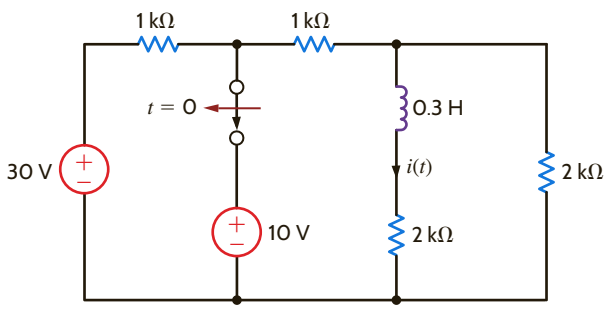

Figure P7.63

7.64 The switch in the circuit in Fig. P7.64 has been closed for a long time and is moved at $t = 0$. Find $i_o(t)$ for $t > 0$.

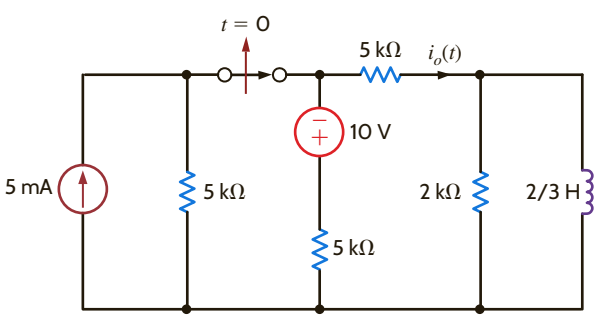

Figure P7.64

7.65 Find $v_o(t)$ for $t > 0$ in the network in Fig. P7.65 using the step-by-step technique.

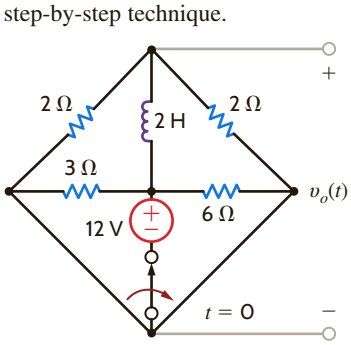

Figure P7.65

7.66 Find $i(t)$ for $t > 0$ in the circuit in Fig. P7.66 using the step-by-step method.

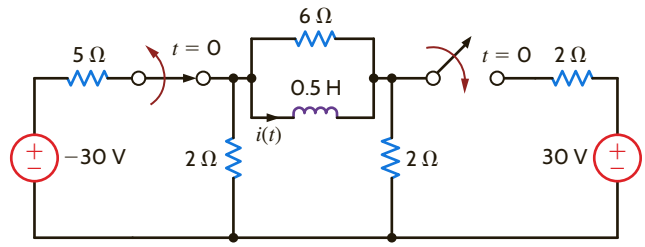

Figure P7.66

7.67 Find $i(t)$ for $t > 0$ in the circuit in Fig. P7.67 using the step-by-step method.

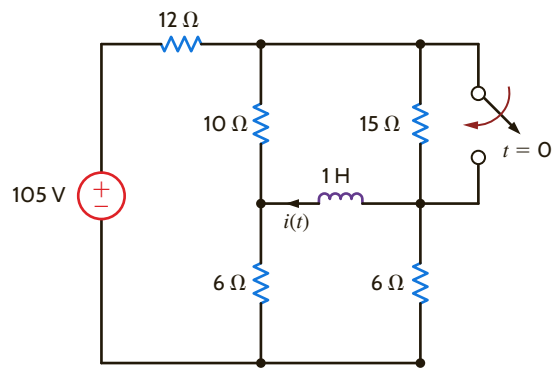

Figure P7.67

7.68 Use the step-by-step technique to find $v_o(t)$ for $t > 0$ in the circuit in Fig. P7.68.

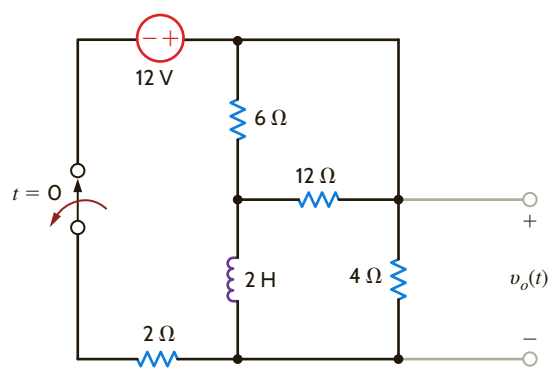

Figure P7.68

7.69 Find $v_o(t)$ for $t > 0$ in the circuit in Fig. P7.69 using the step-by-step method.

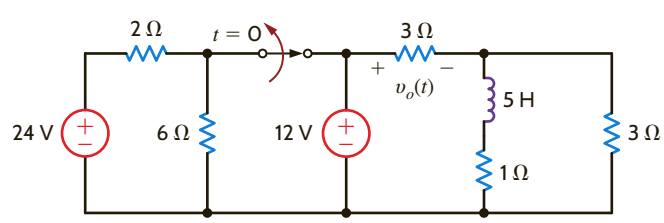

Figure P7.69

7.70 Use the step-by-step method to find $i_o(t)$ for $t > 0$ in the circuit in Fig. P7.70.

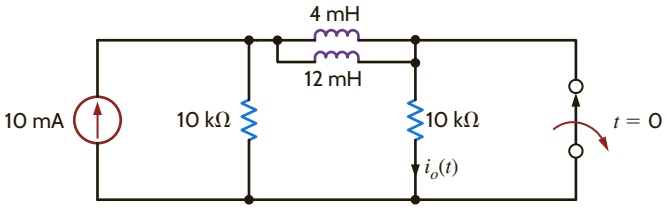

Figure P7.70

7.71 Find $i_o(t)$ for $t > 0$ in the network in Fig. P7.71.

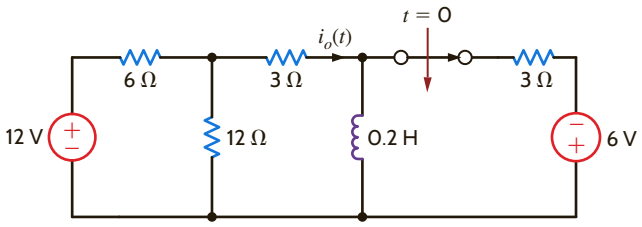

Figure P7.71

7.72 Find $i_o(t)$ for $t > 0$ in the circuit in Fig. P7.72.

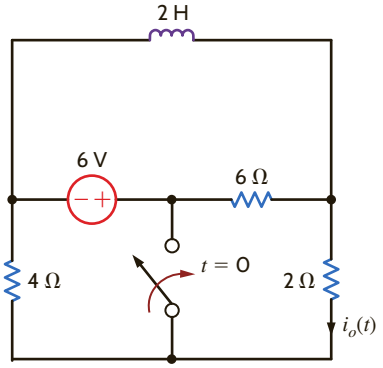

Figure P7.72

7.73 Use the step-by-step method to find $v_o(t)$ for $t > 0$ in the circuit in Fig. P7.73.

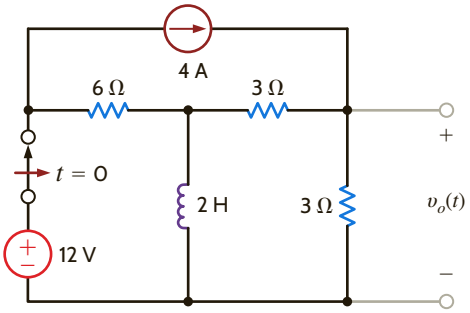

Figure P7.73

7.74 Use the step-by-step method to find $i_o(t)$ for $t > 0$ in the network in Fig. P7.74.

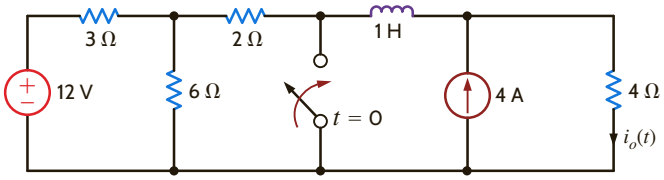

Figure P7.74

7.75 Use the step-by-step method to find $v_o(t)$ for $t > 0$ in the circuit in Fig. P7.75.

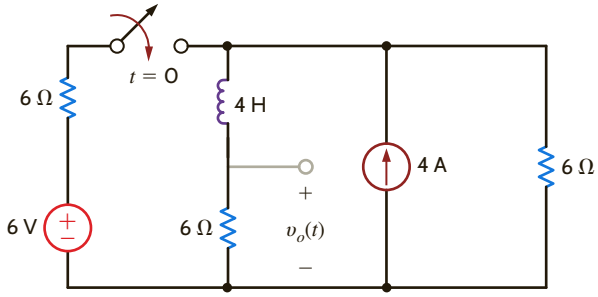

Figure P7.75

7.76 Use the step-by-step method to find $v_o(t)$ for $t > 0$ in the circuit in Fig. P7.76.

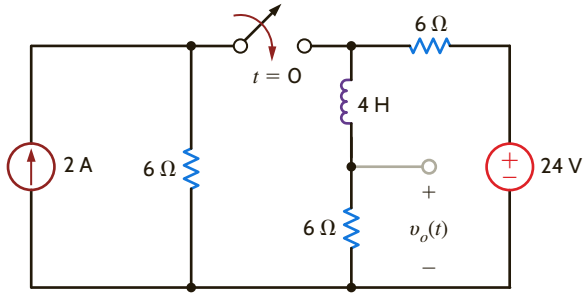

Figure P7.76

7.77 Use the step-by-step method to find $v_o(t)$ for $t > 0$ in the circuit in Fig. P7.77.

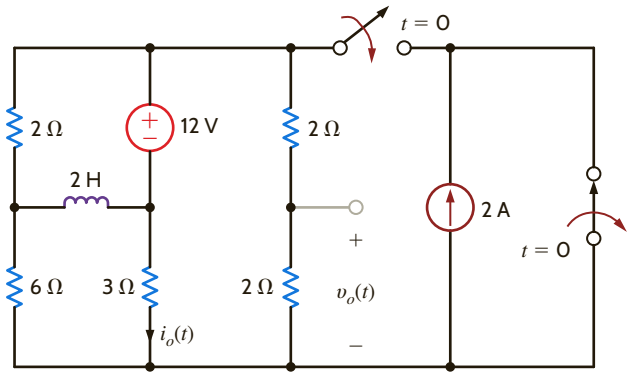

Figure P7.77

7.78 Use the step-by-step method to find $i_o(t)$ for $t > 0$ in the network in Fig. P7.78.

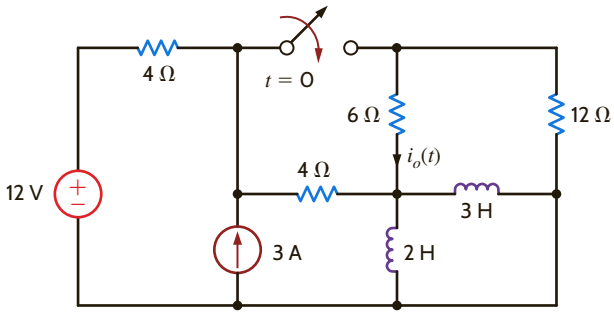

Figure P7.78

7.79 Use the step-by-step method to find $v_o(t)$ for $t > 0$ in the network in Fig. P7.79.

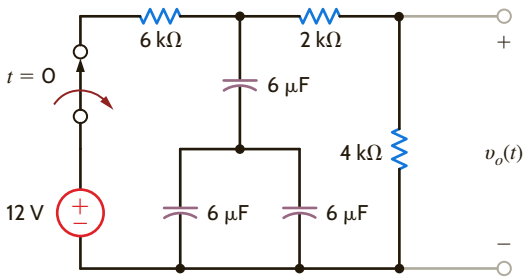

Figure P7.79

7.80 Find $i_L(t)$ for $t > 0$ in the circuit in Fig. P7.80 using the step-by-step method.

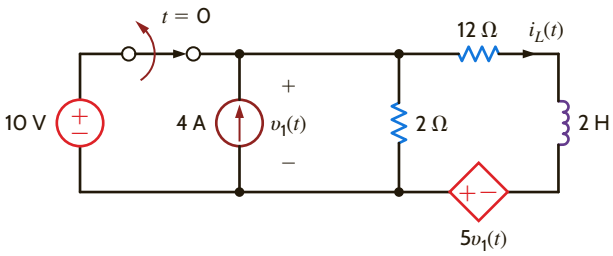

Figure P7.80

7.81 Find $i_o(t)$ for $t > 0$ in the network in Fig. P7.81 using the step-by-step method.

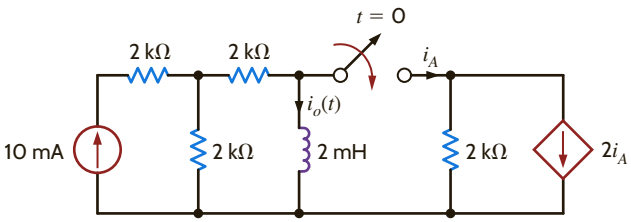

Figure P7.81

7.82 Use the step-by-step technique to find $v_o(t)$ for $t > 0$ in the network in Fig. P7.82.

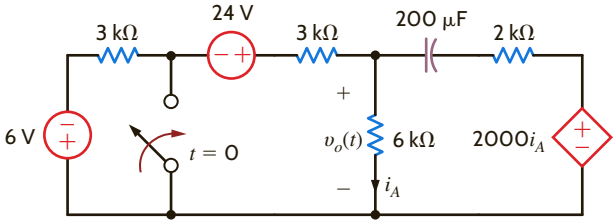

Figure P7.82

7.83 The current source in the network in Fig. P7.83a is defined in Fig. P7.83b. The initial voltage across the capacitor must be zero. (Why?) Determine the current $i_o(t)$ for $t > 0$.

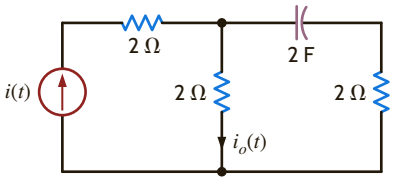

(a)

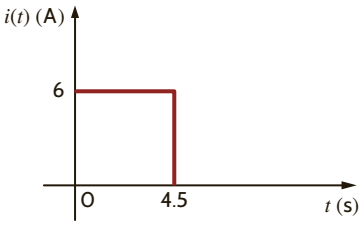

(b)

Figure P7.83

7.84 Determine the equation for the voltage $v_o(t)$ for $t > 0$ in Fig. P7.84a when subjected to the input pulse shown in Fig. P7.84b.

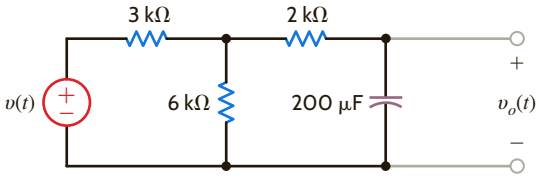

(a)

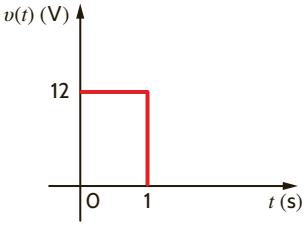

(b)

Figure P7.84

7.85 The voltage $v(t)$ shown in Fig. P7.85a is given by the graph shown in Fig. P7.85b. If $i_L(0) = 0$, answer the following questions:

(a) How much energy is stored in the inductor at $t = 3$ s?

(b) How much power is supplied by the source at $t = 4$ s?

(c) What is $i(t = 6 \text{ s})$?

(d) How much power is absorbed by the inductor at $t = 3$ s?

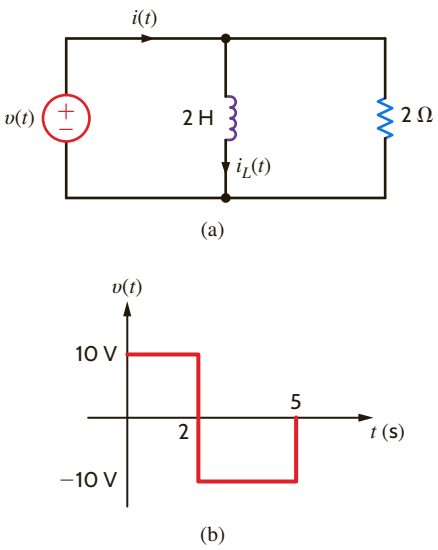

Figure P7.85

7.86 Given that $v_{C1}(0-) = -10$ V and $v_{C2}(0-) = 20$ V in the circuit in Fig. P7.86, find $i(0+)$.

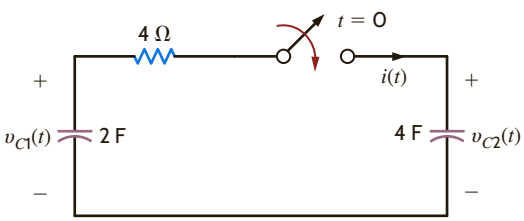

Figure P7.86

7.87 In the circuit in Fig. P7.87, $v_R(t) = 100e^{-400t}$ V for $t < 0$. Find $v_R(t)$ for $t > 0$.

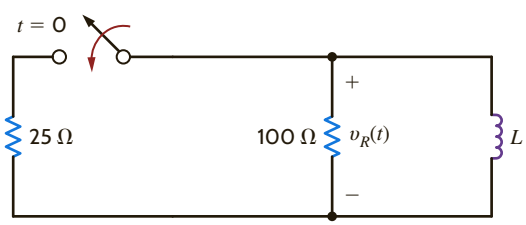

Figure P7.87

7.88 Find the output voltage $v_o(t)$ in the network in Fig. P7.88 if the input voltage is $v_i(t) = 5(u(t) - u(t - 0.05))$ V.

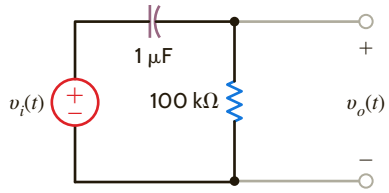

Figure P7.88

7.89 In the network in Fig. P7.89, find $i(t)$ for $t > 0$. If $v_{C1}(0-) = -10$ V, calculate $v_{C2}(0-)$.

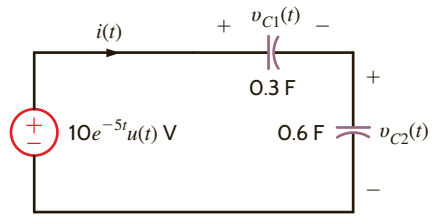

Figure P7.89

7.90 The switch in the circuit in Fig. P7.90 is closed at $t = 0$. If $i_1(0-) = 2$ A, determine $i_2(0+)$, $v_R(0+)$, and $i_1(t = \infty)$.

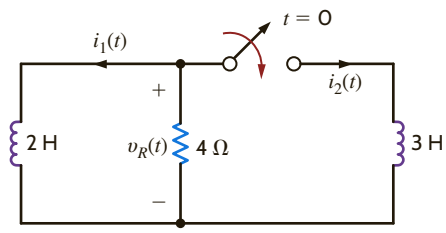

Figure P7.90

7.91 Given that $i(t) = 2.5 + 1.5e^{-4t}$ A for $t > 0$ in the circuit in Fig. P7.91, find R_1, R_2, and L.

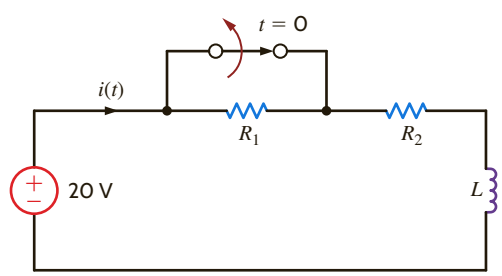

Figure P7.91

7.92 The switch in the circuit in Fig. P7.92 has been closed for a long time and is opened at $t = 0$. If $v_C(t) = 20 - 8e^{-0.05t}$ V, find R_1, R_2, and C.

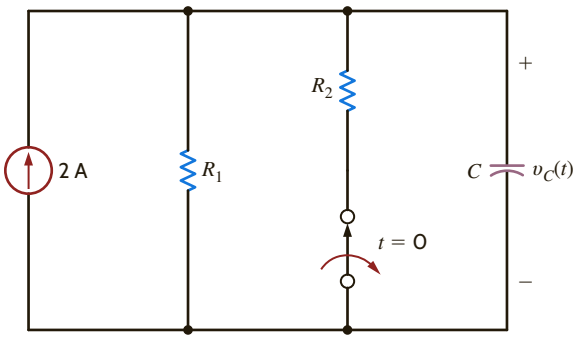

Figure P7.92

7.93 Given that $i(t) = 13.33e^{-t} - 8.33e^{-0.5t}$A for $t > 0$ in the network in Fig. P7.93, find the following:

(a) $v_c(0)$.

(b) $v_c(t = 1 \text{ s})$.

(c) the capacitance C.

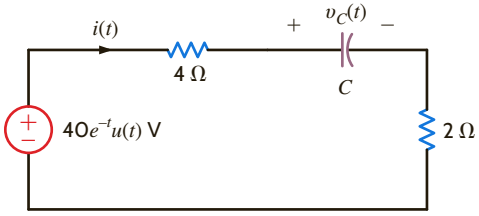

Figure P7.93

7.94 For the circuit in Fig. P7.94, choose R_1, R_2, and L such that

$$v_o(t) = -20e^{-10^6 t} \text{ V}$$

and the current i_1 never exceeds 1 A.

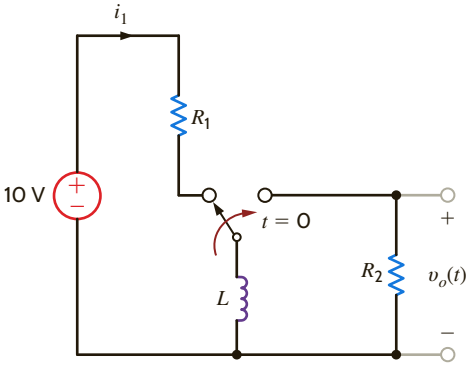

Figure P7.94

7.95 For the network in Fig. P7.95, choose C so the time constant will be 120 μs for $t > 0$.

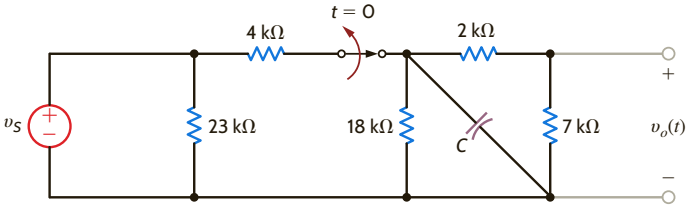

Figure P7.95

7.96 The differential equation that describes the current $i_o(t)$ in a network is

$$\frac{d^2 i_o(t)}{dt^2} + 6\frac{di_o(t)}{dt} + 4i_o(t) = 0$$

Find

(a) the characteristic equation of the network.

(b) the network's natural frequencies.

(c) the expression for $i_o(t)$.

7.97 The terminal current in a network is described by the equation

$$\frac{d^2 i_o(t)}{dt^2} + 8\frac{di_o(t)}{dt} + 16i_o(t) = 0$$

Find (a) the characteristic equation of the network, (b) the network's natural frequencies, and (c) the equation for $i_o(t)$.

7.98 The voltage $v_1(t)$ in a network is defined by the equation

$$\frac{d^2 v_1(t)}{dt^2} + 2\left[\frac{dv_1(t)}{dt}\right] + 5v_1(t) = 0$$

Find

(a) the characteristic equation of the network.

(b) the circuit's natural frequencies.

(c) the expression for $v_1(t)$.

7.99 The output voltage of a circuit is described by the differential equation

$$\frac{d^2 v_o(t)}{dt^2} + 8\frac{dv_o(t)}{dt} + 10v_o(t) = 0$$

Find (a) the characteristic equation of the circuit, (b) the network's natural frequencies, and (c) the equation for $v_o(t)$.

7.100 A parallel RLC circuit contains a resistor $R = 1\ \Omega$ and an inductor $L = 2$ H. Select the value of the capacitor so that the circuit is critically damped.

7.101 A series RLC circuit contains a resistor $R = 2\ \Omega$ and a capacitor $C = 1/2$ F. Select the value of the inductor so that the circuit is critically damped.

7.102 The parameters for a parallel RLC circuit are $R = 1\ \Omega$, $L = 1/2$ H, and $C = 1/2$ F. Determine the type of damping exhibited by the circuit.

7.103 In the critically damped circuit shown in Fig. P7.103, the initial conditions on the storage elements are $i_L(0) = 2$ A and $v_C(0) = 5$ V. Determine the voltage $v(t)$.

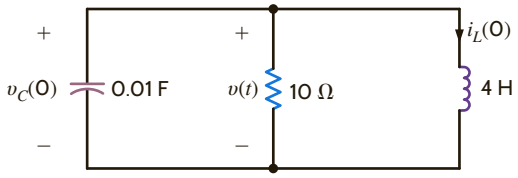

Figure P7.103

7.104 Find $v_C(t)$ for $t > 0$ in the circuit in Fig. P7.104.

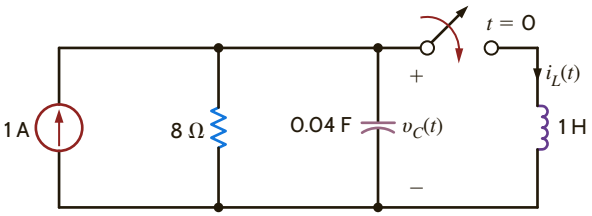

Figure P7.104

7.105 Find $v_o(t)$ for $t > 0$ in the circuit in Fig. P7.105 and plot the response, including the time interval just prior to closing the switch.

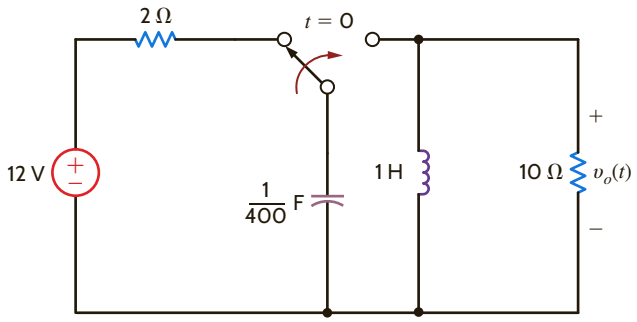

Figure P7.105

7.106 The switch in the circuit in Fig P7.106 has been closed for a long time and is opened at $t = 0$. Find $i(t)$ for $t > 0$.

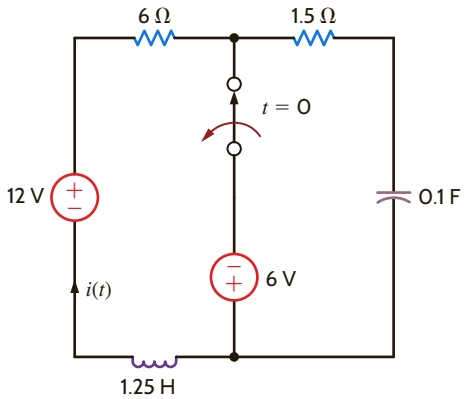

Figure P7.106

7.107 In the circuit shown in Fig. P7.107, find $v(t) > 0$.

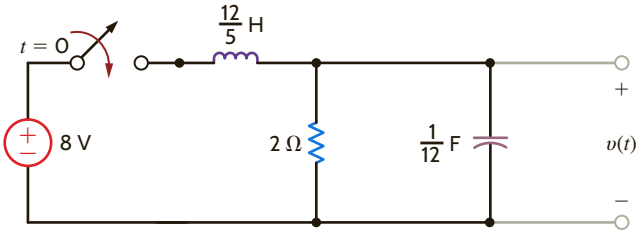

Figure P7.107

7.108 Find $v_o(t)$ for $t > 0$ in the network in Fig. P7.108 and plot the response, including the time interval just prior to moving the switch.

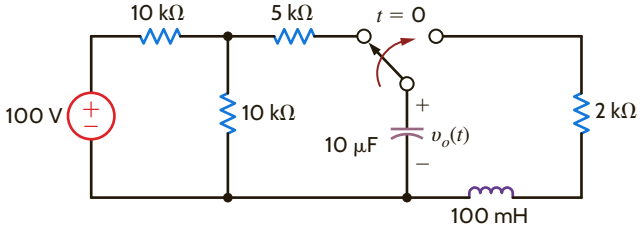

Figure P7.108

7.109 Find $v_o(t)$ for $t > 0$ in the circuit in Fig. P7.109 and plot the response, including the time interval just prior to moving the switch.

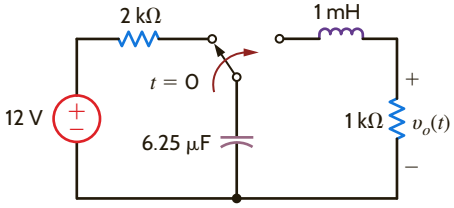

Figure P7.109

7.110 For the underdamped circuit shown in Fig. P7.110, determine the voltage $v(t)$ if the initial conditions on the storage elements are $i_L(0) = 1$ A and $v_C(0) = 10$ V.

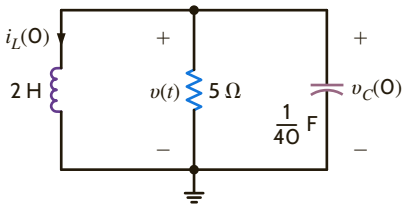

Figure P7.110

7.111 Find $v_C(t)$ for $t > 0$ in the circuit in Fig. P7.111 if $v_C(0) = 0$.

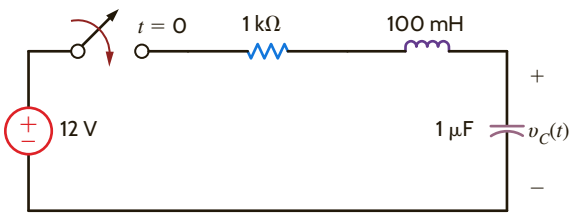

Figure P7.111

7.112 The switch in the circuit in Fig. P7.112 has been closed for a long time and is opened at $t = 0$. Find $i(t)$ for $t > 0$.

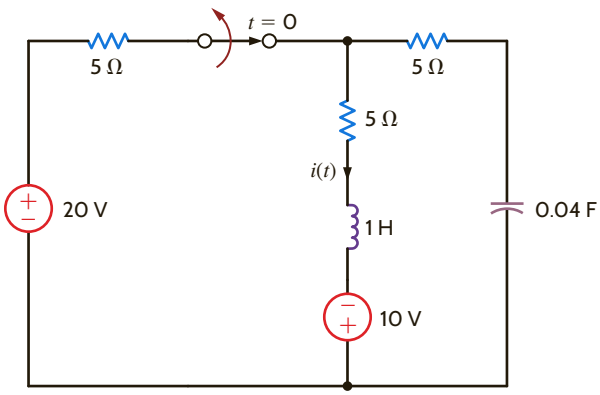

Figure P7.112

7.113 Find $v_o(t)$ for $t > 0$ in the circuit in Fig. P7.113 and plot the response, including the time interval just prior to closing the switch.

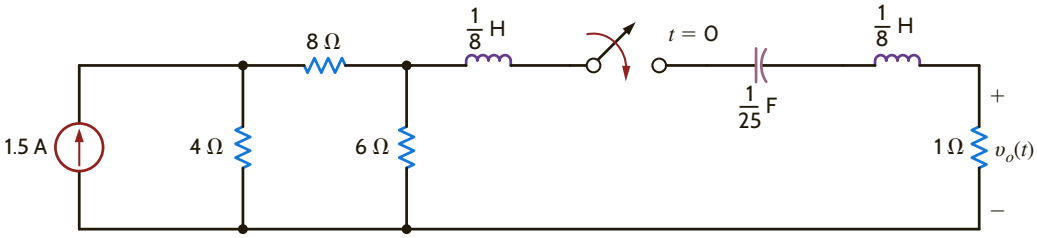

Figure P7.113

7.114 Given the network in Fig. P7.114, plot $v_o(t)$ over a 10-s interval starting at $t = 0$, using a 100-ms step size.

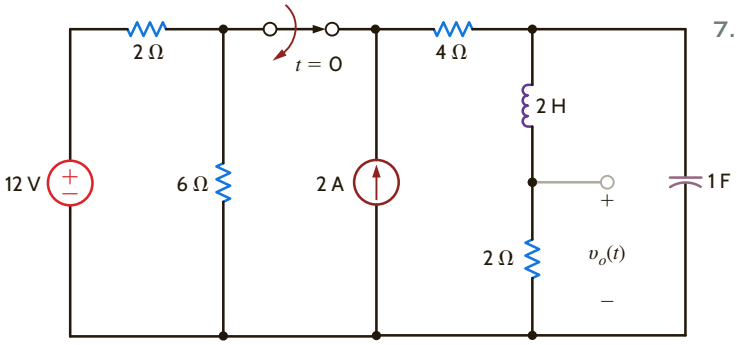

Figure P7.114

7.115 Given the network in Fig. P7.115, plot $v_o(t)$ over a 10-s interval starting at $t = 0$, using a 100-ms step size.

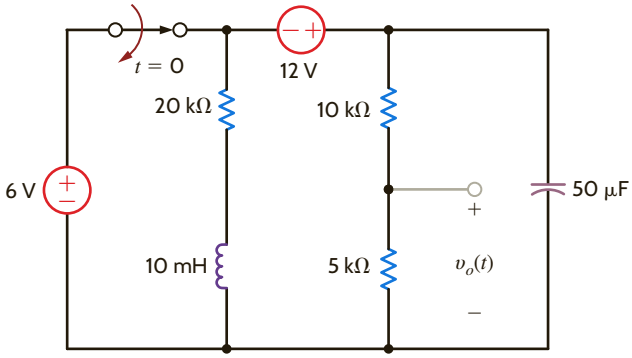

Figure P7.115

7.116 Given the network in Fig. P7.116a and the input voltage shown in Fig. P7.116b, plot the voltage $v_o(t)$ over the interval $0 \le t \le 4$ s, using a 20-ms step size.

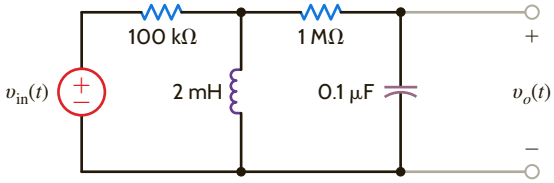

(a)

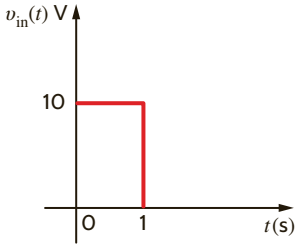

(b)

Figure P7.116

7.117 Design a parallel *RLC* circuit with $R \geqq 1$ kΩ that has the characteristic equation

$$s^2 + 4 \times 10^7 s + 3 \times 10^{14} = 0$$

7.118 Design a parallel *RLC* circuit with $R \geqq 1$ kΩ that has the characteristic equation

$$s^2 + 4 \times 10^7 s + 4 \times 10^{14} = 0$$

TYPICAL PROBLEMS FOUND ON THE FE EXAM

7PFE-1 In the circuit in Fig. 7PFE-1, the switch, which has been closed for a long time, opens at $t = 0$. Find the value of the capacitor voltage $v_C(t)$ at $t = 2$ s.

a. 0.936 V **c.** 0.264 V
b. 0.756 V **d.** 0.462V

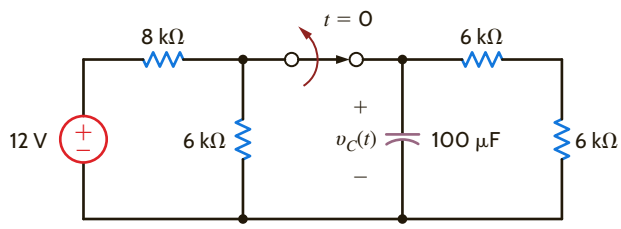

Figure 7PFE-1

7PFE-2 In the network in Fig. 7PFE-2, the switch closes at $t = 0$. Find $v_o(t)$ at $t = 1$ s.

a. 5.62 V **c.** 4.25 V
b. 1.57 V **d.** 3.79 V

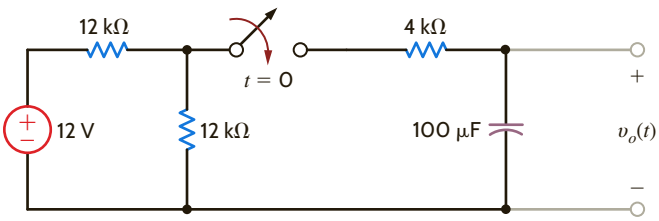

Figure 7PFE-2

7PFE-3 Assume that the switch in the network in Fig. 7PFE-3 has been closed for some time. At $t = 0$ the switch opens. Determine the time required for the capacitor voltage to decay to one-half of its initially charged value.

a. 0.416 s **c.** 0.235 s
b. 0.625 s **d.** 0.143 s

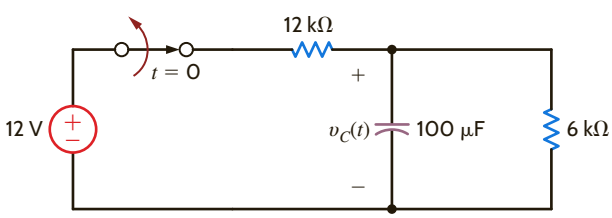

Figure 7PFE-3

7PFE-4 Find the inductor current $i_L(t)$ for $t > 0$ in the circuit in Fig. 7PFE-4.

a. $i_L(t) = 3 - 2e^{-t/6}$ A, $t > 0$
b. $i_L(t) = 1 + 2e^{-2t/3}$ A, $t > 0$
c. $i_L(t) = 6 - e^{-t/6}$ A, $t > 0$
d. $i_L(t) = 3 - e^{-2t/3}$ A, $t > 0$

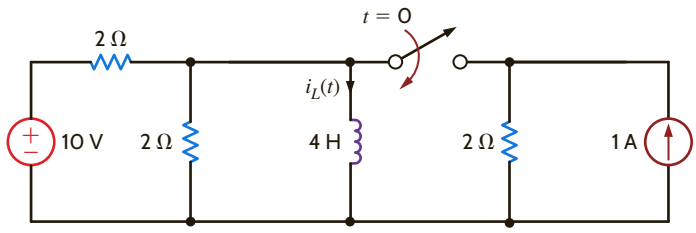

Figure 7PFE-4

7PFE-5 Find the inductor current $i_L(t)$ for $t > 0$ in the circuit in Fig. 7PFE-5.

a. $i_L(t) = 1.4 + 0.4e^{-4t/3}$ A, $t > 0$
b. $i_L(t) = 1.2 + 0.4e^{-5t/3}$ A, $t > 0$
c. $i_L(t) = 0.4 + 0.2e^{-4t/3}$ A, $t > 0$
d. $i_L(t) = 2.4 + 0.6e^{-5t/3}$ A, $t > 0$

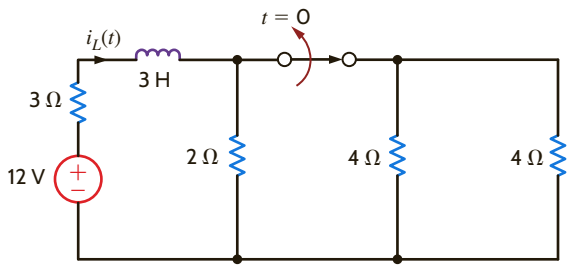

Figure 7PFE-5

Chapter Eight

THE LEARNING GOALS FOR THIS CHAPTER ARE THAT STUDENTS SHOULD BE ABLE TO:

- Describe the basic characteristics of sinusoidal functions.
- Perform phasor and inverse phasor transformations.
- Draw phasor diagrams.
- Calculate impedance and admittance for basic circuit elements: R, L, C.
- Determine the equivalent impedance of basic circuit elements connected in series and parallel.
- Determine the equivalent admittance of basic circuit elements connected in series and parallel.
- Redraw a circuit in the frequency domain given a circuit with a sinusoidal source.
- Apply our circuit analysis techniques to frequency-domain circuits.
- Use PSpice to analyze ac steady-state circuits.

AC STEADY-STATE ANALYSIS

EXPERIMENTS THAT HELP STUDENTS DEVELOP AN UNDERSTANDING OF AC CIRCUIT ANALYSIS TECHNIQUES ARE:

- Introduction to Phasors: Measure the current phasor for a resistive, capacitive, and inductive load and determine the function of a current shunt.
- Phasor Analysis and Kirchhoff's Current Law: Build a simple circuit with resistors, capacitors, and inductors and verify Kirchhoff's current law by measuring the phasor for each leg of the circuit.
- Using Nodal or Mesh Analysis to Solve AC Circuits: Compare the results from either a nodal or mesh analysis with the measured voltages and currents in an ac circuit, taking into account the effects that real components have on these values.

BY APPLYING THEIR KNOWLEDGE OF SINUSOIDAL FUNCTIONS, STUDENTS CAN DESIGN:

- A summing amplifier circuit using instrumentation amplifiers to explore the relationship between frequency and sound.

8.1 Sinusoids

Let us begin our discussion of sinusoidal functions by considering the sine wave

$$x(t) = X_M \sin \omega t \tag{8.1}$$

where $x(t)$ could represent either $v(t)$ or $i(t)$. X_M is the *amplitude, maximum value*, or peak value; ω is the *radian* or *angular frequency*; and ωt is the *argument* of the sine function. A plot of the function in Eq. (8.1) as a function of its argument is shown in **Fig. 8.1a**. Obviously, the function repeats itself every 2π radians. This condition is described mathematically as $x(\omega t + 2\pi) = x(\omega t)$, or in general for period T, as

$$x[\omega(t + T)] = x(\omega t) \tag{8.2}$$

meaning that the function has the same value at time $t + T$ as it does at time t.

HINT
The relationship between frequency and period

The waveform can also be plotted as a function of time, as shown in **Fig. 8.1b**. Note that this function goes through one period every T seconds. In other words, in 1 second it goes through $1/T$ periods or cycles. The number of cycles per second, called Hertz, is the frequency f, where

$$f = \frac{1}{T} \tag{8.3}$$

HINT
The relationship between frequency, period, and radian frequency

Now since $\omega T = 2\pi$, as shown in Fig. 8.1a, we find that

$$\omega = \frac{2\pi}{T} = 2\pi f \tag{8.4}$$

which is, of course, the general relationship among period in seconds, frequency in Hertz, and radian frequency.

Now that we have discussed some of the basic properties of a sine wave, let us consider the following general expression for a sinusoidal function:

HINT
Phase lag defined

$$x(t) = X_M \sin(\omega t + \theta) \tag{8.5}$$

In this case, $(\omega t + \theta)$ is the argument of the sine function, and θ is called the *phase angle*. A plot of this function is shown in **Fig. 8.2**, together with the original function in Eq. (8.1) for comparison. Because of the presence of the phase angle, any point on the waveform $X_M \sin(\omega t + \theta)$ occurs θ radians earlier in time than the corresponding point on the waveform $X_M \sin \omega t$. Therefore, we say that $X_M \sin \omega t$ *lags* $X_M \sin(\omega t + \theta)$ by θ radians. In the more general situation, if

HINT
In phase and out of phase defined

$$x_1(t) = X_{M_1} \sin(\omega t + \theta)$$

and

$$x_2(t) = X_{M_2} \sin(\omega t + \phi)$$

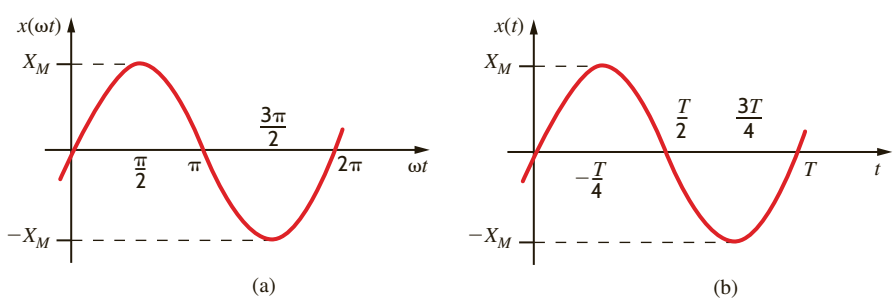

Figure 8.1
Plots of a sine wave as a function of both ωt and t.

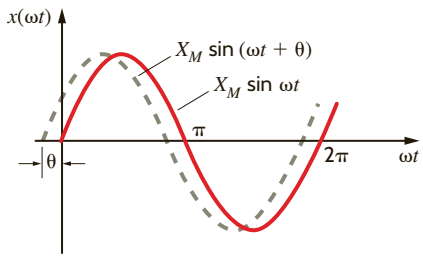

Figure 8.2

Graphical illustration of $X_M \sin(\omega t + \theta)$ leading $X_M \sin \omega t$ by θ radians.

then $x_1(t)$ *leads* $x_2(t)$ by $\theta - \phi$ radians and $x_2(t)$ lags $x_1(t)$ by $\theta - \phi$ radians. If $\theta = \phi$, the waveforms are identical and the functions are said to be *in phase*. If $\theta \neq \phi$, the functions are *out of phase*.

HINT
Phase lead graphically illustrated

The phase angle is normally expressed in degrees rather than radians. Therefore, at this point we will simply state that we will use the two forms interchangeably; that is,

$$x(t) = X_M \sin\left(\omega t + \frac{\pi}{2}\right) = X_M \sin(\omega t + 90°) \qquad \textbf{8.6}$$

HINT
An important note about phase angles

Rigorously speaking, since ωt is in radians, the phase angle should be as well. However, it is common practice and convenient to use degrees for phase; therefore, that will be our practice in this text.

In addition, it should be noted that adding to the argument integer multiples of either 2π radians or 360° does not change the original function. This can easily be shown mathematically but is visibly evident when examining the waveform, as shown in Fig. 8.2.

Although our discussion has centered on the sine function, we could just as easily have used the cosine function, since the two waveforms differ only by a phase angle; that is,

$$\cos \omega t = \sin\left(\omega t + \frac{\pi}{2}\right) \qquad \textbf{8.7}$$

$$\sin \omega t = \cos\left(\omega t - \frac{\pi}{2}\right) \qquad \textbf{8.8}$$

HINT
Some trigonometric identities that are useful in phase angle calculations

We are often interested in the phase difference between two sinusoidal functions. Three conditions must be satisfied before we can determine the phase difference: (1) the frequency of both sinusoids must be the same, (2) the amplitude of both sinusoids must be positive, and (3) both sinusoids must be written as sine waves or cosine waves. Once in this format, the phase angle between the functions can be computed as outlined previously. Two other trigonometric identities that normally prove useful in phase angle determination are

$$-\cos(\omega t) = \cos(\omega t \pm 180°) \qquad \textbf{8.9}$$

$$-\sin(\omega t) = \sin(\omega t \pm 180°) \qquad \textbf{8.10}$$

Finally, the angle-sum and angle-difference relationships for sines and cosines may be useful in the manipulation of sinusoidal functions. These relations are

$$\begin{aligned} \sin(\alpha + \beta) &= \sin\alpha\cos\beta + \cos\alpha\sin\beta \\ \cos(\alpha + \beta) &= \cos\alpha\cos\beta - \sin\alpha\sin\beta \\ \sin(\alpha - \beta) &= \sin\alpha\cos\beta - \cos\alpha\sin\beta \\ \cos(\alpha - \beta) &= \cos\alpha\cos\beta + \sin\alpha\sin\beta \end{aligned} \qquad \textbf{8.11}$$

EXAMPLE 8.1

We wish to plot the waveforms for the following functions:

a. $v(t) = 1\cos(\omega t + 45°)$,

b. $v(t) = 1\cos(\omega t + 225°)$, and

c. $v(t) = 1\cos(\omega t - 315°)$.

SOLUTION Figure 8.3a shows a plot of the function $v(t) = 1 \cos \omega t$. Figure 8.3b is a plot of the function $v(t) = 1 \cos(\omega t + 45°)$. Figure 8.3c is a plot of the function $v(t) = 1 \cos(\omega t + 225°)$. Note that since

$$v(t) = 1 \cos(\omega t + 225°) = 1 \cos(\omega t + 45° + 180°)$$

this waveform is 180° out of phase with the waveform in Fig. 8.3b; that is, $\cos(\omega t + 225°) = -\cos(\omega t + 45°)$, and Fig. 8.3c is the negative of Fig. 8.3b. Finally, since the function

$$v(t) = 1 \cos(\omega t - 315°) = 1 \cos(\omega t - 315° + 360°) = 1 \cos(\omega t + 45°)$$

this function is identical to that shown in Fig. 8.3b.

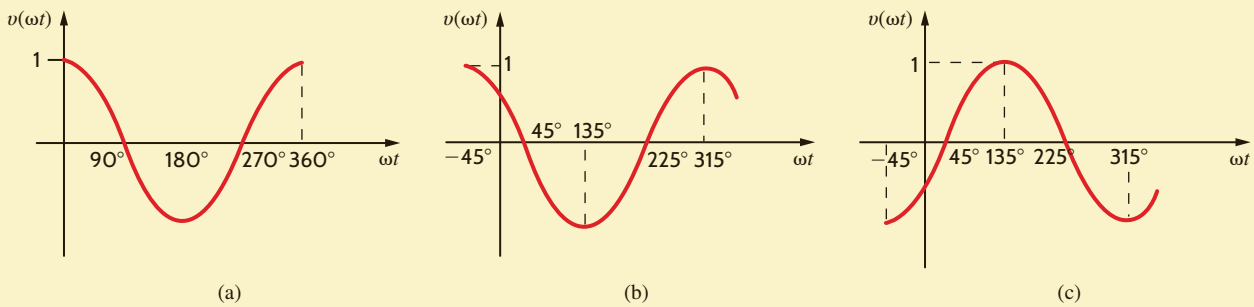

Figure 8.3
Cosine waveforms with various phase angles.

EXAMPLE 8.2

Determine the frequency and the phase angle between the two voltages $v_1(t) = 12 \sin(1000t + 60°)$ V and $v_2(t) = -6 \cos(1000t + 30°)$ V.

SOLUTION The frequency in Hertz (Hz) is given by the expression

$$f = \frac{\omega}{2\pi} = \frac{1000}{2\pi} = 159.2 \text{ Hz}$$

Using Eq. (8.9), $v_2(t)$ can be written as

$$v_2(t) = -6 \cos(\omega t + 30°) = 6 \cos(\omega t + 210°) \text{ V}$$

Then employing Eq. (8.7), we obtain

$$6 \sin(\omega t + 300°) \text{ V} = 6 \sin(\omega t - 60°) \text{ V}$$

Now that both voltages of the same frequency are expressed as sine waves with positive amplitudes, the phase angle between $v_1(t)$ and $v_2(t)$ is $60° - (-60°) = 120°$; that is, $v_1(t)$ leads $v_2(t)$ by 120° or $v_2(t)$ lags $v_1(t)$ by 120°.

LEARNING ASSESSMENTS

E8.1 Given the voltage $v(t) = 120 \cos(314t + \pi/4)$ V, determine the frequency of the voltage in Hertz and the phase angle in degrees.

ANSWER:
$f = 50$ Hz;
$\theta = 45°$.

E8.2 Three branch currents in a network are known to be

$$i_1(t) = 2\sin(377t + 45°)\ \text{A}$$
$$i_2(t) = 0.5\cos(377t + 10°)\ \text{A}$$
$$i_3(t) = -0.25\sin(377t + 60°)\ \text{A}$$

Determine the phase angles by which $i_1(t)$ leads $i_2(t)$ and $i_1(t)$ leads $i_3(t)$.

ANSWER:
i_1 leads i_2 by $-55°$;
i_1 leads i_3 by $165°$.

8.2 Sinusoidal and Complex Forcing Functions

In the preceding chapters we applied a constant forcing function to a network and found that the steady-state response was also constant.

In a similar manner, if we apply a sinusoidal forcing function to a linear network, the steady-state voltages and currents in the network will also be sinusoidal. This should also be clear from the KVL and KCL equations. For example, if one branch voltage is a sinusoid of some frequency, the other branch voltages must be sinusoids of the same frequency if KVL is to apply around any closed path. This means, of course, that the forced solutions of the differential equations that describe a network with a sinusoidal forcing function are sinusoidal functions of time. For example, if we assume that our input function is a voltage $v(t)$ and our output response is a current $i(t)$, as shown in **Fig. 8.4**, then if $v(t) = A\sin(\omega t + \theta)$, $i(t)$ will be of the form $i(t) = B\sin(\omega t + \phi)$. The critical point here is that we know the form of the output response, and therefore the solution involves simply determining the values of the two parameters B and ϕ.

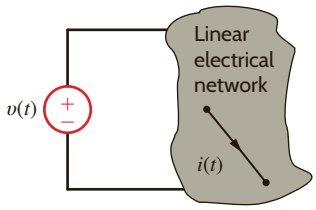

Figure 8.4
Current response to an applied voltage in an electrical network.

EXAMPLE 8.3

Consider the circuit in **Fig. 8.5**. Let us derive the expression for the current.

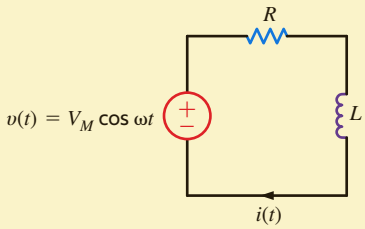

Figure 8.5
A simple *RL* circuit.

SOLUTION

The KVL equation for this circuit is

$$L\frac{di(t)}{dt} + Ri(t) = V_M\cos\omega t$$

Since the input forcing function is $V_M\cos\omega t$, we assume that the forced response component of the current $i(t)$ is of the form

$$i(t) = A\cos(\omega t + \phi)$$

which can be written using Eq. (8.11) as

$$\begin{aligned} i(t) &= A\cos\phi\cos\omega t - A\sin\phi\sin\omega t \\ &= A_1\cos\omega t + A_2\sin\omega t \end{aligned}$$

Note that this is, as we observed in Chapter 7, of the form of the forcing function $\cos\omega t$ and its derivative $\sin\omega t$. Substituting this form for $i(t)$ into the preceding differential equation yields

$$L\frac{d}{dt}(A_1\cos\omega t + A_2\sin\omega t) + R(A_1\cos\omega t + A_2\sin\omega t) = V_M\cos\omega t$$

Evaluating the indicated derivative produces

$$-A_1\omega L \sin \omega t + A_2\omega L \cos \omega t + RA_1 \cos \omega t + RA_2 \sin \omega t = V_M \cos \omega t$$

By equating coefficients of the sine and cosine functions, we obtain

$$-A_1\omega L + A_2 R = 0$$
$$A_1 R + A_2\omega L = V_M$$

that is, two simultaneous equations in the unknowns A_1 and A_2. Solving these two equations for A_1 and A_2 yields

$$A_1 = \frac{RV_M}{R^2 + \omega^2 L^2}$$
$$A_2 = \frac{\omega L V_M}{R^2 + \omega^2 L^2}$$

Therefore,

$$i(t) = \frac{RV_M}{R^2 + \omega^2 L^2} \cos \omega t + \frac{\omega L V_M}{R^2 + \omega^2 L^2} \sin \omega t$$

which, using the last identity in Eq. (8.11), can be written as

$$i(t) = A \cos(\omega t + \phi)$$

where A and ϕ are determined as follows:

$$A \cos \phi = \frac{RV_M}{R^2 + \omega^2 L^2}$$
$$A \sin \phi = \frac{-\omega L V_M}{R^2 + \omega^2 L^2}$$

Hence,

$$\tan \phi = \frac{A \sin \phi}{A \cos \phi} = -\frac{\omega L}{R}$$

and therefore,

$$\phi = -\tan^{-1} \frac{\omega L}{R}$$

and since

$$(A \cos \phi)^2 + (A \sin \phi)^2 = A^2(\cos^2\phi + \sin^2\phi) = A^2$$
$$A^2 = \frac{R^2 V_M^2}{(R^2 + \omega^2 L^2)^2} + \frac{(\omega L)^2 V_M^2}{(R^2 + \omega^2 L^2)^2}$$
$$= \frac{V_M^2}{R^2 + \omega^2 L^2}$$
$$A = \frac{V_M}{\sqrt{R^2 + \omega^2 L^2}}$$

Hence, the final expression for $i(t)$ is

$$i(t) = \frac{V_M}{\sqrt{R^2 + \omega^2 L^2}} \cos\left(\omega t - \tan^{-1} \frac{\omega L}{R}\right)$$

The preceding analysis indicates that ϕ is zero if $L = 0$ and hence $i(t)$ is in phase with $v(t)$. If $R = 0$, $\phi = -90°$, and the current lags the voltage by 90°. If L and R are both present, the current lags the voltage by some angle between 0° and 90°.

This example illustrates an important point: solving even a simple one-loop circuit containing one resistor and one inductor is very complicated compared to the solution of a single-loop circuit containing only two resistors. Imagine for a moment how laborious it would be to solve a more complicated circuit using the procedure employed in Example 8.3. To circumvent this approach, we will establish a correspondence between sinusoidal time functions and complex numbers. We will then show that this relationship leads to a set of algebraic equations for currents and voltages in a network (e.g., loop currents or node voltages) in which the coefficients of the variables are complex numbers. Hence, once again we will find that determining the currents or voltages in a circuit can be accomplished by solving a set of algebraic equations; however, in this case, their solution is complicated by the fact that variables in the equations have complex, rather than real, coefficients.

The vehicle we will employ to establish a relationship between time-varying sinusoidal functions and complex numbers is Euler's equation, which for our purposes is written as

$$e^{j\omega t} = \cos \omega t + j \sin \omega t \qquad \textbf{8.12}$$

This complex function has a real part and an imaginary part:

$$\begin{aligned} \mathrm{Re}\left(e^{j\omega t}\right) &= \cos \omega t \\ \mathrm{Im}\left(e^{j\omega t}\right) &= \sin \omega t \end{aligned} \qquad \textbf{8.13}$$

where Re(·) and Im(·) represent the real part and the imaginary part, respectively, of the function in the parentheses. Recall that $j = \sqrt{-1}$.

Now suppose that we select as our forcing function in Fig. 8.4 the nonrealizable voltage

$$v(t) = V_M e^{j\omega t} \qquad \textbf{8.14}$$

which, because of Euler's identity, can be written as

$$v(t) = V_M \cos \omega t + jV_M \sin \omega t \qquad \textbf{8.15}$$

The real and imaginary parts of this function are each realizable. We think of this complex forcing function as two forcing functions, a real one and an imaginary one, and as a consequence of linearity, the principle of superposition applies and thus the current response can be written as

$$i(t) = I_M \cos(\omega t + \phi) + jI_M \sin(\omega t + \phi) \qquad \textbf{8.16}$$

where $I_M \cos(\omega t + \phi)$ is the response due to $V_M \cos \omega t$ and $jI_M \sin(\omega t + \phi)$ is the response due to $jV_M \sin \omega t$. This expression for the current containing both a real and an imaginary term can be written via Euler's equation as

$$i(t) = I_M e^{j(\omega t + \phi)} \qquad \textbf{8.17}$$

Because of the preceding relationships, we find that rather than apply the forcing function $V_M \cos \omega t$ and calculate the response $I_M \cos(\omega t + \phi)$, we can apply the complex forcing function $V_M e^{j\omega t}$ and calculate the response $I_M e^{j(\omega t + \phi)}$, the real part of which is the desired response $I_M \cos(\omega t + \phi)$. Although this procedure may initially appear to be more complicated, it is not. It is through this technique that we will convert the differential equation to an algebraic equation that is much easier to solve.

EXAMPLE 8.4

Once again, let us determine the current in the *RL* circuit examined in Example 8.3. However, rather than apply $V_M \cos \omega t$, we will apply $V_M e^{j\omega t}$.

SOLUTION

The forced response will be of the form

$$i(t) = I_M e^{j(\omega t + \phi)}$$

where only I_M and ϕ are unknown. Substituting $v(t)$ and $i(t)$ into the differential equation for the circuit, we obtain

$$RI_M e^{j(\omega t + \phi)} + L\frac{d}{dt}\left(I_M e^{j(\omega t + \phi)}\right) = V_M e^{j\omega t}$$

Taking the indicated derivative, we obtain

$$RI_M e^{j(\omega t + \phi)} + j\omega L I_M e^{j(\omega t + \phi)} = V_M e^{j\omega t}$$

Dividing each term of the equation by the common factor $e^{j\omega t}$ yields

$$RI_M e^{j\phi} + j\omega L I_M e^{j\phi} = V_M$$

which is an algebraic equation with complex coefficients. This equation can be written as

$$I_M e^{j\phi} = \frac{V_M}{R + j\omega L}$$

HINT

Summary of complex number relationships:

$$x + jy = re^{j\theta}$$
$$r = \sqrt{x^2 + y^2}$$
$$\theta = \tan^{-1}\frac{y}{x}$$
$$x = r\cos\theta$$
$$y = r\sin\theta$$
$$\frac{1}{e^{j\theta}} = e^{-j\theta}$$

Converting the right-hand side of the equation to exponential or polar form produces the equation

$$I_M e^{j\phi} = \frac{V_M}{\sqrt{R^2 + \omega^2 L^2}}\, e^{j[-\tan^{-1}(\omega L/R)]}$$

(A quick refresher on complex numbers is given in the Appendix for readers who need to sharpen their skills in this area.) The preceding form clearly indicates that the magnitude and phase of the resulting current are

$$I_M = \frac{V_M}{\sqrt{R^2 + \omega^2 L^2}}$$

and

$$\phi = -\tan^{-1}\frac{\omega L}{R}$$

However, since our actual forcing function was $V_M \cos\omega t$ rather than $V_M e^{j\omega t}$, our actual response is the real part of the complex response:

$$\begin{aligned} i(t) &= I_M \cos(\omega t + \phi) \\ &= \frac{V_M}{\sqrt{R^2 + \omega^2 L^2}} \cos\left(\omega t - \tan^{-1}\frac{\omega L}{R}\right) \end{aligned}$$

Note that this is identical to the response obtained in the previous example by solving the differential equation for the current $i(t)$.

8.3 Phasors

Once again let us assume that the forcing function for a linear network is of the form

$$v(t) = V_M e^{j\omega t}$$

Then every steady-state voltage or current in the network will have the same form and the same frequency ω; for example, a current $i(t)$ will be of the form $i(t) = I_M e^{j(\omega t + \phi)}$.

As we proceed in our subsequent circuit analyses, we will simply note the frequency and then drop the factor $e^{j\omega t}$ since it is common to every term in the describing equations. Dropping the term $e^{j\omega t}$ indicates that every voltage or current can be fully described by a magnitude and phase. For example, a voltage $v(t)$ can be written in exponential form as

$$v(t) = V_M \cos(\omega t + \theta) = \mathrm{Re}[V_M e^{j(\omega t + \theta)}] \qquad \textbf{8.18}$$

HINT

If $v(t) = V_M \cos(\omega t + \theta)$ and $i(t) = I_M \cos(\omega t + \phi)$, then in phasor notation

$$\boldsymbol{V} = V_M\underline{/\theta}$$

and

$$\boldsymbol{I} = I_M\underline{/\phi}$$

or as a complex number

$$v(t) = \mathrm{Re}(V_M\underline{/\theta}\, e^{j\omega t}) \qquad \textbf{8.19}$$

Since we are working with a complex forcing function, the real part of which is the desired answer, and each term in the equation will contain $e^{j\omega t}$, we can drop $\mathrm{Re}(\cdot)$ and $e^{j\omega t}$ and work only with the complex number $V_M\underline{/\theta}$. This complex representation is commonly

called a *phasor*. As a distinguishing feature, phasors will be written in boldface type. In a completely identical manner a voltage $v(t) = V_M \cos(\omega t + \theta) = \mathrm{Re}[V_M e^{j(\omega t + \theta)}]$ and a current $i(t) = I_M \cos(\omega t + \phi) = \mathrm{Re}[I_M e^{j(\omega t + \phi)}]$ are written in phasor notation as $\mathbf{V} = V_M\underline{/\theta}$ and $\mathbf{I} = I_M\underline{/\phi}$, respectively. Note that it is common practice to express phasors with positive magnitudes.

EXAMPLE 8.5

Again, we consider the *RL* circuit in Example 8.3. Let us use phasors to determine the expression for the current.

SOLUTION

The differential equation is

$$L\frac{di(t)}{dt} + Ri(t) = V_M \cos \omega t$$

The forcing function can be replaced by a complex forcing function that is written as $\mathbf{V}e^{j\omega t}$ with phasor $\mathbf{V} = V_M\underline{/\theta^\circ}$. Similarly, the forced response component of the current $i(t)$ can be replaced by a complex function that is written as $\mathbf{I}e^{j\omega t}$ with phasor $\mathbf{I} = I_M\underline{/\phi}$. From our previous discussions we recall that the solution of the differential equation is the real part of this current.

Using the complex forcing function, we find that the differential equation becomes

$$L\frac{d}{dt}(\mathbf{I}e^{j\omega t}) + R\mathbf{I}e^{j\omega t} = \mathbf{V}e^{j\omega t}$$

$$j\omega L\mathbf{I}e^{j\omega t} + R\mathbf{I}e^{j\omega t} = \mathbf{V}e^{j\omega t}$$

Note that $e^{j\omega t}$ is a common factor and, as we have already indicated, can be eliminated, leaving the phasors; that is,

$$j\omega L\mathbf{I} + R\mathbf{I} = \mathbf{V}$$

Therefore,

$$\mathbf{I} = \frac{\mathbf{V}}{R + j\omega L} = I_M\underline{/\phi} = \frac{V_M}{\sqrt{R^2 + \omega^2 L^2}}\underline{/-\tan^{-1}\frac{\omega L}{R}}$$

Thus,

$$i(t) = \frac{V_M}{\sqrt{R^2 + \omega^2 L^2}}\cos\left(\omega t - \tan^{-1}\frac{\omega L}{R}\right)$$

which once again is the function we obtained earlier.

HINT

The differential equation is reduced to a phasor equation.

We define relations between phasors after the $e^{j\omega t}$ term has been eliminated as "phasor, or frequency domain, analysis." Thus, we have transformed a set of differential equations with sinusoidal forcing functions in the time domain into a set of algebraic equations containing complex numbers in the frequency domain. In effect, we are now faced with solving a set of algebraic equations for the unknown phasors. The phasors are then simply transformed back to the time domain to yield the solution of the original set of differential equations. In addition, we note that the solution of sinusoidal steady-state circuits would be relatively simple if we could write the phasor equation directly from the circuit description. In Section 8.4 we will lay the groundwork for doing just that.

Note that in our discussions we have tacitly assumed that sinusoidal functions would be represented as phasors with a phase angle based on a cosine function. Therefore, if sine functions are used, we will simply employ the relationship in Eq. (8.7) to obtain the proper phase angle.

In summary, while $v(t)$ represents a voltage in the time domain, the phasor $\mathbf{V}$ represents the voltage in the frequency domain. The phasor contains only magnitude and phase information, and the frequency is implicit in this representation. The transformation from the time domain to the frequency domain, as well as the reverse transformation, is shown in Table 8.1. Recall that the phase angle is based on a cosine function and, therefore, if a sine function is involved, a 90° shift factor must be employed, as shown in the table.

TABLE 8.1 Phasor representation

TIME DOMAIN	FREQUENCY DOMAIN
$A \cos(\omega t \pm \theta)$	$A\angle{\pm\theta}$
$A \sin(\omega t \pm \theta)$	$A\angle{\pm\theta - 90°}$

PROBLEM-SOLVING STRATEGY

PHASOR ANALYSIS

STEP 1. Using phasors, transform a set of differential equations in the time domain into a set of algebraic equations in the frequency domain.

STEP 2. Solve the algebraic equations for the unknown phasors.

STEP 3. Transform the now-known phasors back to the time domain.

However, if a network contains only sine sources, there is no need to perform the 90° shift. We simply perform the normal phasor analysis, and then the *imaginary* part of the time-varying complex solution is the desired response. Simply put, cosine sources generate a cosine response, and sine sources generate a sine response.

LEARNING ASSESSMENTS

E8.3 Convert the following voltage functions to phasors.

$$v_1(t) = 12 \cos(377t - 425°) \text{ V}$$
$$v_2(t) = 18 \sin(2513t + 4.2°) \text{ V}$$

ANSWER:
$\mathbf{V}_1 = 12\angle{-425°}$ V;
$\mathbf{V}_2 = 18\angle{-85.8°}$ V.

E8.4 Convert the following phasors to the time domain if the frequency is 400 Hz.

$$\mathbf{V}_1 = 10\angle{20°} \text{ V}$$
$$\mathbf{V}_2 = 12\angle{-60°} \text{ V}$$

ANSWER:
$v_1(t) = 10 \cos(800\pi t + 20°)$ V;
$v_2(t) = 12 \cos(800\pi t - 60°)$ V.

8.4 Phasor Relationships for Circuit Elements

As we proceed in our development of the techniques required to analyze circuits in the sinusoidal steady state, we are now in a position to establish the phasor relationships between voltage and current for the three passive elements *R, L,* and *C*.

In the case of a resistor as shown in Fig. 8.6a, the voltage–current relationship is known to be

$$v(t) = Ri(t) \tag{8.20}$$

Applying the complex voltage $V_M e^{j(\omega t + \theta_v)}$ results in the complex current $I_M e^{j(\omega t + \theta_i)}$, and therefore Eq. (8.20) becomes

$$V_M e^{j(\omega t + \theta_v)} = RI_M e^{j(\omega t + \theta_i)}$$

which reduces to

$$V_M e^{j\theta_v} = RI_M e^{j\theta_i} \tag{8.21}$$

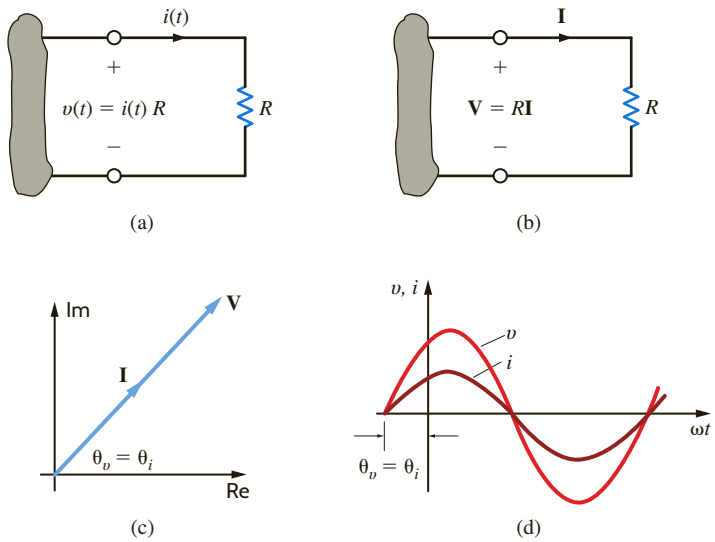

Figure 8.6
Voltage–current relationships for a resistor.

Equation (8.21) can be written in phasor form as

$$\mathbf{V} = R\mathbf{I} \tag{8.22}$$

HINT
Current and voltage are in phase.

where

$$\mathbf{V} = V_M e^{j\theta_v} = V_M \underline{/\theta_v} \quad \text{and} \quad \mathbf{I} = I_M e^{j\theta_i} = I_M \underline{/\theta_i}$$

This relationship is illustrated in **Fig. 8.6b**. From Eq. (8.21) we see that $\theta_v = \theta_i$ and thus the current and voltage for this circuit are *in phase.*

Historically, complex numbers have been represented as points on a graph in which the x-axis represents the real axis and the y-axis the imaginary axis. The line segment connecting the origin with the point provides a convenient representation of the magnitude and angle when the complex number is written in a polar form. A review of the Appendix will indicate how these complex numbers or line segments can be added, subtracted, and so on. Since phasors are complex numbers, it is convenient to represent the phasor voltage and current graphically as line segments. A plot of the line segments representing the phasors is called a *phasor diagram*. This pictorial representation of phasors provides immediate information on the relative magnitude of one phasor with another, the angle between two phasors, and the relative position of one phasor with respect to another (i.e., leading or lagging). A phasor diagram and the sinusoidal waveforms for the resistor are shown in **Figs. 8.6c** and **d**, respectively. A phasor diagram will be drawn for each of the other circuit elements in the remainder of this section.

EXAMPLE 8.6

If the voltage $v(t) = 24 \cos (377t + 75°)$ V is applied to a 6-Ω resistor as shown in Fig. 8.6a, we wish to determine the resultant current.

SOLUTION

Since the phasor voltage is

$$\mathbf{V} = 24\underline{/75°} \text{ V}$$

the phasor current from Eq. (8.22) is

$$\mathbf{I} = \frac{24\underline{/75°}}{6} = 4\underline{/75°} \text{A}$$

which in the time domain is

$$i(t) = 4 \cos (377t + 75°) \text{ A}$$

LEARNING ASSESSMENT

E8.5 The current in a 4-Ω resistor is known to be $\mathbf{I} = 12\angle 60°$ A. Express the voltage across the resistor as a time function if the frequency of the current is 4 kHz.

ANSWER:
$v_1(t) = 48\cos(8000\pi t + 60°)$ V.

The voltage–current relationship for an inductor, as shown in **Fig. 8.7a**, is

$$v(t) = L\frac{di(t)}{dt} \tag{8.23}$$

Substituting the complex voltage and current into this equation yields

$$V_M e^{j(\omega t + \theta_v)} = L\frac{d}{dt} I_M e^{j(\omega t + \theta_i)}$$

which reduces to

$$V_M e^{j\theta_v} = j\omega L I_M e^{j\theta_i} \tag{8.24}$$

Equation (8.24) in phasor notation is

$$\mathbf{V} = j\omega L\mathbf{I} \tag{8.25}$$

HINT
The derivative process yields a frequency-dependent function.

Note that the differential equation in the time domain (8.23) has been converted to an algebraic equation with complex coefficients in the frequency domain. This relationship is shown in **Fig. 8.7b**. Since the imaginary operator $j = 1e^{j90°} = 1\angle 90° = \sqrt{-1}$, Eq. (8.24) can be written as

$$V_M e^{j\theta_v} = \omega L I_M e^{j(\theta_i + 90°)} \tag{8.26}$$

HINT
The voltage leads the current or the current lags the voltage.

Therefore, the voltage and current are *90° out of phase,* and in particular the voltage leads the current by 90° or the current lags the voltage by 90°. The phasor diagram and the sinusoidal waveforms for the inductor circuit are shown in **Figs. 8.7c** and **d**, respectively.

Figure 8.7
Voltage–current relationships for an inductor.

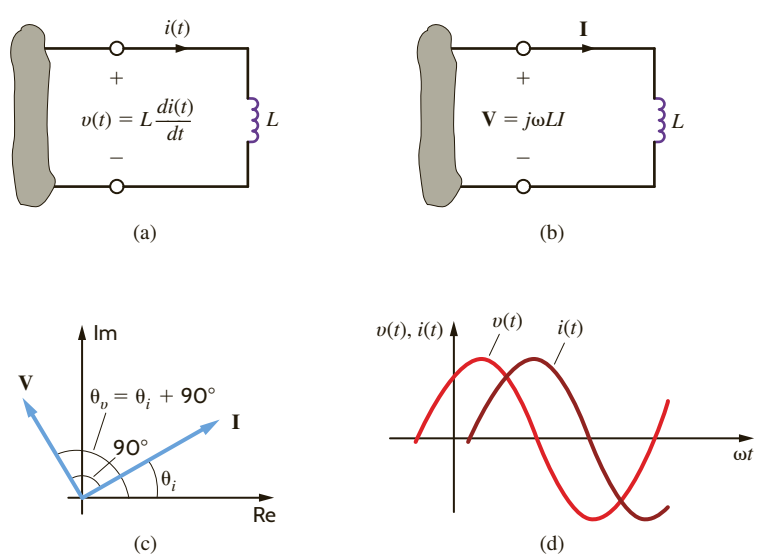

EXAMPLE 8.7

The voltage $v(t) = 12\cos(377t + 20°)$ V is applied to a 20-mH inductor, as shown in Fig. 8.7a. Find the resultant current.

SOLUTION

The phasor current is

$$\mathbf{I} = \frac{\mathbf{V}}{j\omega L} = \frac{12\,\underline{/20°}}{\omega L\,\underline{/90°}}$$

$$= \frac{12\,\underline{/20°}}{(377)(20 \times 10^{-3})\,\underline{/90°}}$$

$$= 1.59\underline{/-70°}\text{ A}$$

or

$$i(t) = 1.59\cos(377t - 70°)\text{ A}$$

HINT

Applying $\mathbf{V} = j\omega L\mathbf{I}$

$$\frac{x_1\,\underline{/\theta_1}}{x_2\,\underline{/\theta_2}} = \frac{x_1}{x_2}\underline{/\theta_1 - \theta_2}$$

LEARNING ASSESSMENT

E8.6 The current in a 0.05-H inductor is $\mathbf{I} = 4\underline{/-30°}$ A. If the frequency of the current is 60 Hz, determine the voltage across the inductor.

ANSWER:
$v_L(t) = 75.4\cos(377t + 60°)$ V.

The voltage–current relationship for our last passive element, the capacitor, as shown in **Fig. 8.8a**, is

$$i(t) = C\frac{dv(t)}{dt} \qquad \textbf{8.27}$$

Once again employing the complex voltage and current, we obtain

$$I_M e^{j(\omega t + \theta_i)} = C\frac{d}{dt}V_M e^{j(\omega t + \theta_v)}$$

which reduces to

$$I_M e^{j\theta_i} = j\omega C V_M e^{j\theta_v} \qquad \textbf{8.28}$$

HINT

The current leads the voltage or the voltage lags the current.

In phasor notation this equation becomes

$$\mathbf{I} = j\omega C\mathbf{V} \qquad \textbf{8.29}$$

Eq. (8.27), a differential equation in the time domain, has been transformed into Eq. (8.29), an algebraic equation with complex coefficients in the frequency domain. The phasor relationship is shown in **Fig. 8.8b**. Substituting $j = 1e^{j90°}$ into Eq. (8.28) yields

$$I_M e^{j\theta_i} = \omega C V_M e^{j(\theta_v + 90°)} \qquad \textbf{8.30}$$

Note that the voltage and current are *90° out of phase*. Eq. (8.30) states that the current leads the voltage by 90° or the voltage lags the current by 90°. The phasor diagram and the sinusoidal waveforms for the capacitor circuit are shown in **Figs. 8.8c** and **d**, respectively.

Figure 8.8
Voltage–current relationships for a capacitor.

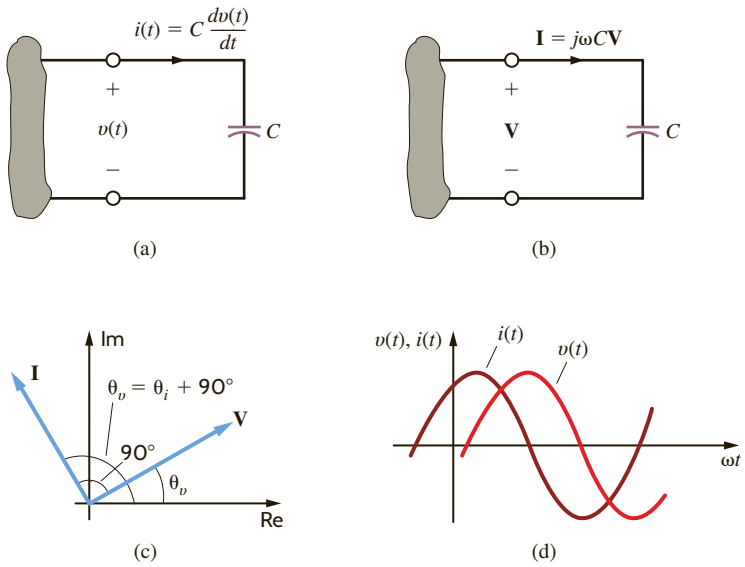

EXAMPLE 8.8

The voltage $v(t) = 100\cos(314t + 15°)$ V is applied to a 100-μF capacitor as shown in Fig. 8.8a. Find the current.

SOLUTION

The resultant phasor current is

$$\begin{aligned}\mathbf{I} &= j\omega C(100\underline{/15°})\\ &= (314)(100 \times 10^{-6}\underline{/90°})(100\underline{/15°})\\ &= 3.14\ \underline{/105°}\ \text{A}\end{aligned}$$

HINT
Applying $\mathbf{I} = j\omega C\mathbf{V}$

Therefore, the current written as a time function is

$$i(t) = 3.14\cos(314t + 105°)\ \text{A}$$

LEARNING ASSESSMENT

E8.7 The current in a 150-μF capacitor is $\mathbf{I} = 3.6\underline{/-145°}$ A. If the frequency of the current is 60 Hz, determine the voltage across the capacitor.

ANSWER:
$v_C(t) = 63.66\cos(377t - 235°)$ V.

8.5 Impedance and Admittance

We have examined each of the circuit elements in the frequency domain on an individual basis. We now wish to treat these passive circuit elements in a more general fashion. We define the two-terminal input *impedance* **Z**, also referred to as the driving point impedance, in exactly the same manner in which we defined resistance earlier. Later we will examine another type of impedance, called transfer impedance.

Impedance is defined as the ratio of the phasor voltage **V** to the phasor current **I**:

$$\mathbf{Z} = \frac{\mathbf{V}}{\mathbf{I}} \tag{8.31}$$

at the two terminals of the element related to one another by the passive sign convention, as illustrated in Fig. 8.9. Since **V** and **I** are complex, the impedance **Z** is complex and

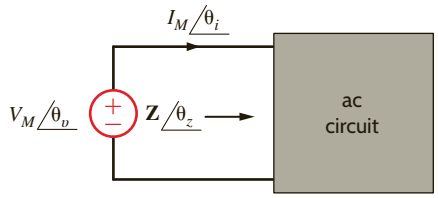

Figure 8.9
General impedance relationship.

$$\mathbf{Z} = \frac{V_M\angle\theta_v}{I_M\angle\theta_i} = \frac{V_M}{I_M}\angle\theta_v - \theta_i = Z\angle\theta_z \qquad \textbf{8.32}$$

Since **Z** is the ratio of **V** to **I**, the units of **Z** are ohms. Thus, impedance in an ac circuit is analogous to resistance in a dc circuit. In rectangular form, impedance is expressed as

$$\mathbf{Z}(\omega) = R(\omega) + jX(\omega) \qquad \textbf{8.33}$$

where $R(\omega)$ is the real, or resistive, component and $X(\omega)$ is the imaginary, or reactive, component. In general, we simply refer to R as the resistance and X as the reactance. It is important to note that R and X are real functions of ω and therefore $\mathbf{Z}(\omega)$ is frequency dependent. Equation (8.33) clearly indicates that **Z** is a complex number; however, it is not a phasor, since phasors denote sinusoidal functions.

Equations (8.32) and (8.33) indicate that

$$Z\angle\theta_z = R + jX \qquad \textbf{8.34}$$

Therefore,

$$Z = \sqrt{R^2 + X^2}$$
$$\theta_z = \tan^{-1}\frac{X}{R} \qquad \textbf{8.35}$$

where

$$R = Z\cos\theta_z$$
$$X = Z\sin\theta_z$$

For the individual passive elements the impedance is as shown in Table 8.2. However, just as it was advantageous to know how to determine the equivalent resistance in dc circuits, we want to learn how to determine the equivalent impedance in ac circuits.

KCL and KVL are both valid in the frequency domain. We can use this fact, as was done in Chapter 2 for resistors, to show that impedances can be combined using the same rules that we established for resistor combinations. That is, if $\mathbf{Z}_1, \mathbf{Z}_2, \mathbf{Z}_3, \cdots, \mathbf{Z}_n$ are connected in series, the equivalent impedance $\mathbf{Z}_s$ is

$$\mathbf{Z}_s = \mathbf{Z}_1 + \mathbf{Z}_2 + \mathbf{Z}_3 + \cdots + \mathbf{Z}_n \qquad \textbf{8.36}$$

and if $\mathbf{Z}_1, \mathbf{Z}_2, \mathbf{Z}_3, \ldots, \mathbf{Z}_n$ are connected in parallel, the equivalent impedance is given by

$$\frac{1}{\mathbf{Z}_p} = \frac{1}{\mathbf{Z}_1} + \frac{1}{\mathbf{Z}_2} + \frac{1}{\mathbf{Z}_3} + \cdots + \frac{1}{\mathbf{Z}_n} \qquad \textbf{8.37}$$

TABLE 8.2 Passive element impedance

PASSIVE ELEMENT	IMPEDANCE
R	$\mathbf{Z} = R$
L	$\mathbf{Z} = j\omega L = jX_L,\ X_L = \omega L$
C	$\mathbf{Z} = \frac{1}{j\omega C} = -\frac{j}{\omega C} = -jX_C,\ X_C = \frac{1}{\omega C}$

EXAMPLE 8.9

Determine the equivalent impedance of the network shown in Fig. 8.10 if the frequency is $f = 60$ Hz. Then compute the current $i(t)$ if the voltage source is $v(t) = 50\cos(\omega t + 30°)$ V. Finally, calculate the equivalent impedance if the frequency is $f = 400$ Hz.

Figure 8.10
Series ac circuit.

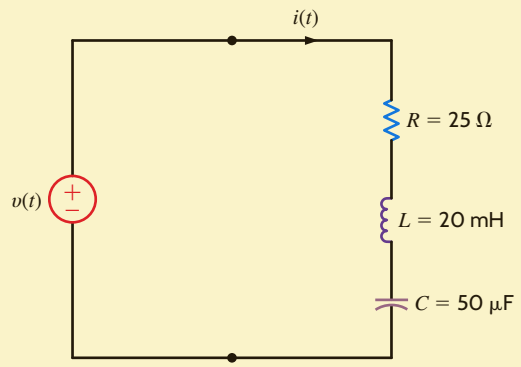

SOLUTION

The impedances of the individual elements at 60 Hz are

$$\mathbf{Z}_R = 25\ \Omega$$
$$\mathbf{Z}_L = j\omega L = j(2\pi \times 60)(20 \times 10^{-3}) = j7.54\ \Omega$$
$$\mathbf{Z}_C = \frac{-j}{\omega C} = \frac{-j}{(2\pi \times 60)(50 \times 10^{-6})} = -j53.05\ \Omega$$

Since the elements are in series,

$$\mathbf{Z} = \mathbf{Z}_R + \mathbf{Z}_L + \mathbf{Z}_C = 25 - j45.51\ \Omega$$

The current in the circuit is given by

$$\mathbf{I} = \frac{\mathbf{V}}{\mathbf{Z}} = \frac{50\angle 30°}{25 - j45.51} = \frac{50\angle 30°}{51.93\angle -61.22°} = 0.96\angle 91.22°\ \text{A}$$

or in the time domain, $i(t) = 0.96\cos(377t + 91.22°)$ A.

If the frequency is 400 Hz, the impedance of each element is

$$\mathbf{Z}_R = 25\ \Omega$$
$$\mathbf{Z}_L = j\omega L = j50.27\ \Omega$$
$$\mathbf{Z}_C = \frac{-j}{\omega C} = -j7.96\ \Omega$$

The total impedance is then

$$\mathbf{Z} = 25 + j42.31 = 49.14\angle 59.42°\ \Omega$$

At the frequency $f = 60$ Hz, the reactance of the circuit is capacitive; that is, if the impedance is written as $R + jX$, $X < 0$. However, at $f = 400$ Hz the reactance is inductive since $X > 0$.

PROBLEM-SOLVING STRATEGY

BASIC AC ANALYSIS

STEP 1. Express $v(t)$ as a phasor and determine the impedance of each passive element.

STEP 2. Combine impedances and solve for the phasor $\mathbf{I}$.

STEP 3. Convert the phasor $\mathbf{I}$ to $i(t)$.

LEARNING ASSESSMENT

E8.8 Find the current $i(t)$ in the network in Fig. E8.8.

ANSWER:
$i(t) = 3.88 \cos(377t - 39.2°)$A.

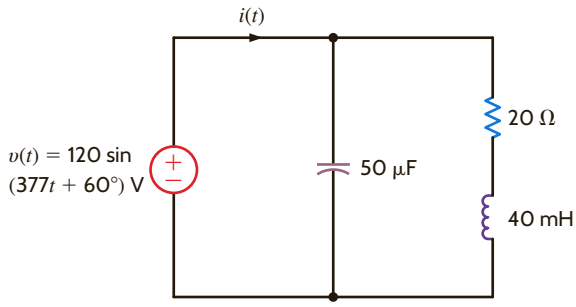

Figure E8.8

Another quantity that is very useful in the analysis of ac circuits is the two-terminal input *admittance*, which is the reciprocal of impedance; that is,

$$\mathbf{Y} = \frac{1}{\mathbf{Z}} = \frac{\mathbf{I}}{\mathbf{V}} \tag{8.38}$$

The units of **Y** are siemens, and this quantity is analogous to conductance in resistive dc circuits. Since **Z** is a complex number, **Y** is also a complex number.

$$\mathbf{Y} = Y_M \angle \theta_y \tag{8.39}$$

which is written in rectangular form as

$$\mathbf{Y} = G + jB \tag{8.40}$$

where G and B are called *conductance* and *susceptance*, respectively. Because of the relationship between **Y** and **Z**, we can express the components of one quantity as a function of the components of the other. From the expression

$$G + jB = \frac{1}{R + jX} \tag{8.41}$$

we can show that

$$G = \frac{R}{R^2 + X^2}, \quad B = \frac{-X}{R^2 + X^2} \tag{8.42}$$

and in a similar manner, we can show that

$$R = \frac{G}{G^2 + B^2}, \quad X = \frac{-B}{G^2 + B^2} \tag{8.43}$$

It is very important to note that, in general, R and G are *not* reciprocals of one another. The same is true for X and B. The purely resistive case is an exception. In the purely reactive case, the quantities are negative reciprocals of one another.

The admittance of the individual passive elements are

$$\begin{aligned} \mathbf{Y}_R &= \frac{1}{R} = G \\ \mathbf{Y}_L &= \frac{1}{j\omega L} = \frac{-j}{\omega L} \\ \mathbf{Y}_C &= j\omega C \end{aligned} \tag{8.44}$$

HINT

Technique for taking the reciprocal:

$$\frac{1}{R + jX} = \frac{R - jX}{(R + jX)(R - jX)} = \frac{R - jX}{R^2 + X^2}$$

Once again, since KCL and KVL are valid in the frequency domain, we can show, using the same approach outlined in Chapter 2 for conductance in resistive circuits, that the rules for combining admittances are the same as those for combining conductances; that is, if $\mathbf{Y}_1$, $\mathbf{Y}_2$, $\mathbf{Y}_3$, . . ., $\mathbf{Y}_n$ are connected in parallel, the equivalent admittance is

$$\mathbf{Y}_p = \mathbf{Y}_1 + \mathbf{Y}_2 + \cdots + \mathbf{Y}_n \tag{8.45}$$

and if $\mathbf{Y}_1$, $\mathbf{Y}_2$, . . ., $\mathbf{Y}_n$ are connected in series, the equivalent admittance is

$$\frac{1}{\mathbf{Y}_S} = \frac{1}{\mathbf{Y}_1} + \frac{1}{\mathbf{Y}_2} + \cdots + \frac{1}{\mathbf{Y}_n} \tag{8.46}$$

EXAMPLE 8.10

Calculate the equivalent admittance $\mathbf{Y}_p$ for the network in Fig. 8.11 and use it to determine the current $\mathbf{I}$ if $\mathbf{V}_S = 60\angle 45°$ V.

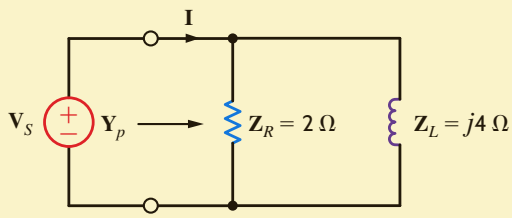

Figure 8.11
Example parallel circuit.

SOLUTION

From Fig. 8.11 we note that

$$\mathbf{Y}_R = \frac{1}{\mathbf{Z}_R} = \frac{1}{2}\ \text{S}$$

$$\mathbf{Y}_L = \frac{1}{\mathbf{Z}_L} = \frac{-j}{4}\ \text{S}$$

Therefore,

$$\mathbf{Y}_p = \frac{1}{2} - j\frac{1}{4}\ \text{S}$$

HINT
Admittances add in parallel.

and hence,

$$\begin{aligned}\mathbf{I} &= \mathbf{Y}_p\mathbf{V}_S \\ &= \left(\frac{1}{2} - j\frac{1}{4}\right)(60\angle 45°) \\ &= 33.5\angle 18.43°\ \text{A}\end{aligned}$$

LEARNING ASSESSMENT

E8.9 Find the current $\mathbf{I}$ in the network in Fig. E8.9.

ANSWER:
$\mathbf{I} = 9.01\angle 53.7°$ A.

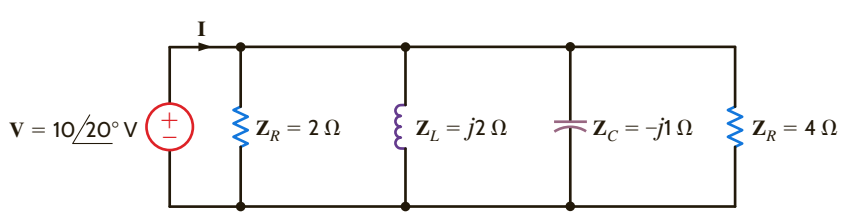

Figure E8.9

As a prelude to our analysis of more general ac circuits, let us examine the techniques for computing the impedance or admittance of circuits in which numerous passive elements are interconnected. The following example illustrates that our technique is analogous to our earlier computations of equivalent resistance.

EXAMPLE 8.11

Consider the network shown in Fig. 8.12a. The impedance of each element is given in the figure. We wish to calculate the equivalent impedance of the network $\mathbf{Z}_{eq}$ at terminals A–B.

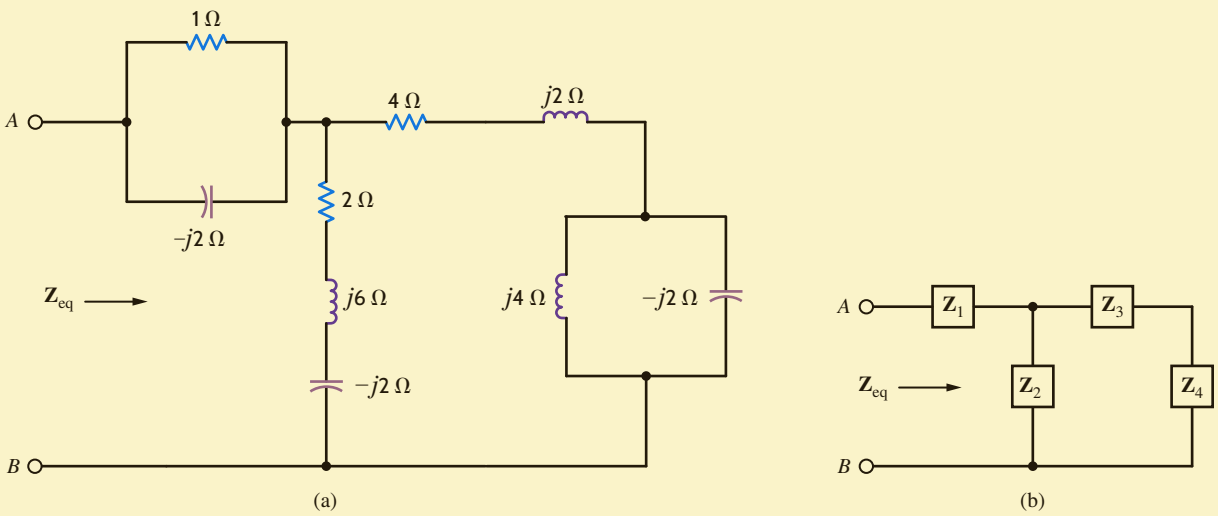

Figure 8.12

Example circuit for determining equivalent impedance in two steps.

SOLUTION

The equivalent impedance $\mathbf{Z}_{eq}$ could be calculated in a variety of ways; we could use only impedances, or only admittances, or a combination of the two. We will use the latter. We begin by noting that the circuit in Fig. 8.12a can be represented by the circuit in Fig. 8.12b.

Note that

$$\begin{aligned}\mathbf{Y}_4 &= \mathbf{Y}_L + \mathbf{Y}_C \\ &= \frac{1}{j4} + \frac{1}{-j2} \\ &= j\frac{1}{4}\ \text{S}\end{aligned}$$

Therefore,

$$\mathbf{Z}_4 = -j4\ \Omega$$

Now

$$\begin{aligned}\mathbf{Z}_{34} &= \mathbf{Z}_3 + \mathbf{Z}_4 \\ &= (4 + j2) + (-j4) \\ &= 4 - j2\ \Omega\end{aligned}$$

and hence,

$$\begin{aligned}\mathbf{Y}_{34} &= \frac{1}{\mathbf{Z}_{34}} \\ &= \frac{1}{4 - j2} \\ &= 0.20 + j0.10\ \text{S}\end{aligned}$$

Since

$$\begin{aligned}\mathbf{Z}_2 &= 2 + j6 - j2\\ &= 2 + j4\ \Omega\end{aligned}$$

then

$$\begin{aligned}\mathbf{Y}_2 &= \frac{1}{2 + j4}\\ &= 0.10 - j0.20\ \text{S}\\ \mathbf{Y}_{234} &= \mathbf{Y}_2 + \mathbf{Y}_{34}\\ &= 0.30 - j0.10\ \text{S}\end{aligned}$$

The reader should carefully note our approach: we are adding impedances in series and adding admittances in parallel.

From $\mathbf{Y}_{234}$ we can compute $\mathbf{Z}_{234}$ as

$$\begin{aligned}\mathbf{Z}_{234} &= \frac{1}{\mathbf{Y}_{234}}\\ &= \frac{1}{0.30 - j0.10}\\ &= 3 + j1\ \Omega\end{aligned}$$

Now

$$\begin{aligned}\mathbf{Y}_1 &= \mathbf{Y}_R + \mathbf{Y}_C\\ &= \frac{1}{1} + \frac{1}{-j2}\\ &= 1 + j\frac{1}{2}\ \text{S}\end{aligned}$$

and then

$$\begin{aligned}\mathbf{Z}_1 &= \frac{1}{1 + j\frac{1}{2}}\\ &= 0.8 - j0.4\ \Omega\end{aligned}$$

Therefore,

$$\begin{aligned}\mathbf{Z}_{\text{eq}} &= \mathbf{Z}_1 + \mathbf{Z}_{234}\\ &= 0.8 - j0.4 + 3 + j1\\ &= 3.8 + j0.6\ \Omega\end{aligned}$$

PROBLEM-SOLVING STRATEGY

COMBINING IMPEDANCES AND ADMITTANCES

STEP 1. Add the admittances of elements in parallel.

STEP 2. Add the impedances of elements in series.

STEP 3. Convert back and forth between admittance and impedance in order to combine neighboring elements.

LEARNING ASSESSMENTS

E8.10 Compute the impedance $\mathbf{Z}_T$ in the network in Fig. E8.10.

ANSWER:
$\mathbf{Z}_T = 3.38 + j1.08\ \Omega$.

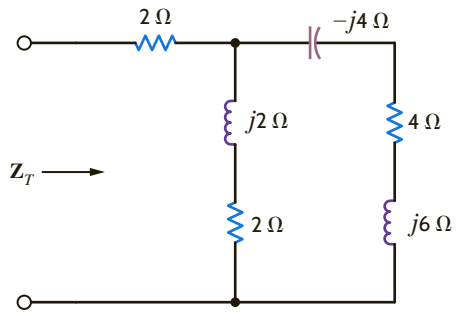

Figure E8.10

E8.11 Find $\mathbf{Z}$ in Fig. E8.11.

ANSWER:
$\mathbf{Z} = 1.95 + j0.29\ \Omega$.

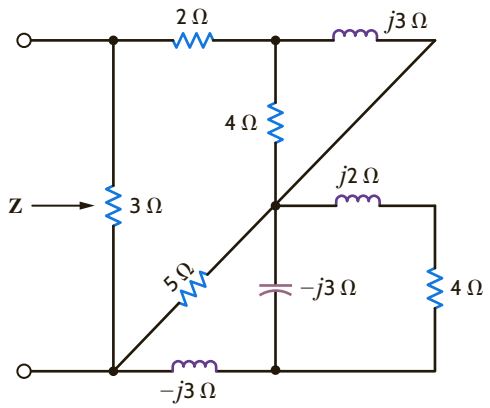

Figure E8.11

8.6 Phasor Diagrams

Impedance and admittance are functions of frequency, and therefore their values change as the frequency changes. These changes in $\mathbf{Z}$ and $\mathbf{Y}$ have a resultant effect on the current–voltage relationships in a network. This impact of changes in frequency on circuit parameters can be easily seen via a phasor diagram. The following examples will serve to illustrate these points.

EXAMPLE 8.12

Let us sketch the phasor diagram for the network shown in Fig. 8.13.

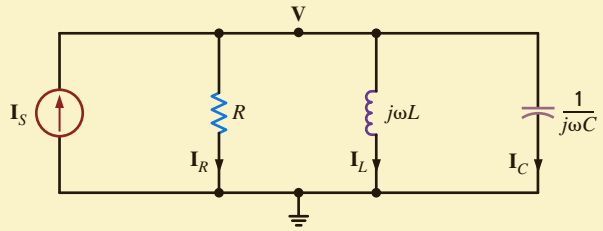

Figure 8.13
Example parallel circuit.

SOLUTION The pertinent variables are labeled on the figure. For convenience in forming a phasor diagram, we select **V** as a reference phasor and arbitrarily assign it a 0° phase angle. We will, therefore, measure all currents with respect to this phasor. We suffer no loss of generality by assigning **V** a 0° phase angle, since if it is actually 30°, for example, we will simply rotate the entire phasor diagram by 30° because all the currents are measured with respect to this phasor.

Figure 8.14
Phasor diagrams for the circuit in Fig. 8.13.

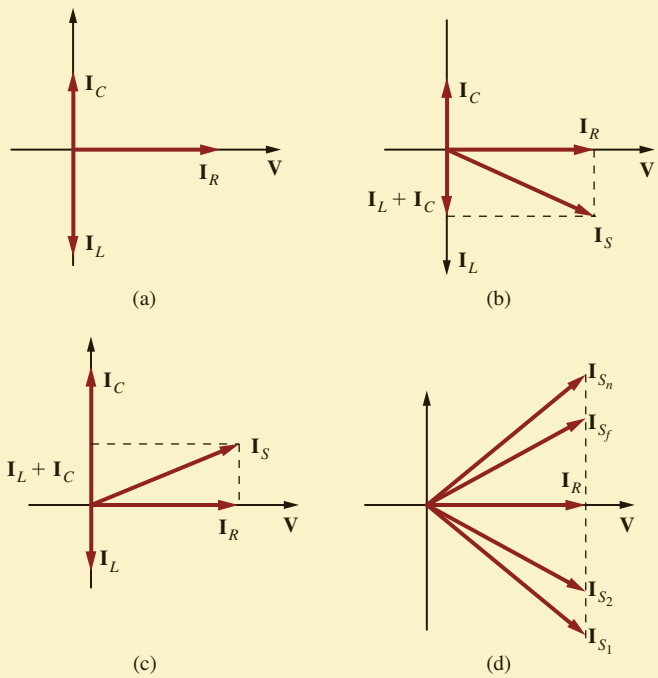

At the upper node in the circuit KCL is

$$\mathbf{I}_S = \mathbf{I}_R + \mathbf{I}_L + \mathbf{I}_C = \frac{\mathbf{V}}{R} + \frac{\mathbf{V}}{j\omega L} + \frac{\mathbf{V}}{1/j\omega C}$$

Since $\mathbf{V} = V_M\underline{/0°}$, then

$$\mathbf{I}_S = \frac{V_M\underline{/0°}}{R} + \frac{V_M\underline{/-90°}}{\omega L} + V_M\omega C\underline{/90°}$$

The phasor diagram that illustrates the phase relationship between **V**, $\mathbf{I}_R$, $\mathbf{I}_L$, and $\mathbf{I}_C$ is shown in **Fig. 8.14a**. For small values of ω such that the magnitude of $\mathbf{I}_L$ is greater than that of $\mathbf{I}_C$, the phasor diagram for the currents is shown in **Fig. 8.14b**. In the case of large values of ω—that is, those for which $\mathbf{I}_C$ is greater than $\mathbf{I}_L$—the phasor diagram for the currents is shown in **Fig. 8.14c**. Note that as ω increases, the phasor $\mathbf{I}_S$ moves from $\mathbf{I}_{S_1}$ to $\mathbf{I}_{S_n}$ along a locus of points specified by the dashed line shown in **Fig. 8.14d**.

Note that $\mathbf{I}_S$ is in phase with **V** when $\mathbf{I}_C = \mathbf{I}_L$ or, in other words, when $\omega L = 1/\omega C$. Hence, the node voltage **V** is in phase with the current source $\mathbf{I}_S$ when

$$\omega = \frac{1}{\sqrt{LC}}$$

This can also be seen from the KCL equation

$$\mathbf{I} = \left[\frac{1}{R} + j\left(\omega C - \frac{1}{\omega L}\right)\right]\mathbf{V}$$

HINT
From a graphical standpoint, phasors can be manipulated like vectors.

EXAMPLE 8.13

Let us determine the phasor diagram for the series circuit shown in Fig. 8.15a.

SOLUTION

KVL for this circuit is of the form

$$\mathbf{V}_S = \mathbf{V}_R + \mathbf{V}_L + \mathbf{V}_C$$
$$= \mathbf{I}R + \omega L\mathbf{I}\underline{/90^\circ} + \frac{\mathbf{I}}{\omega C}\underline{/-90^\circ}$$

If we select $\mathbf{I}$ as a reference phasor so that $\mathbf{I} = I_M\underline{/0^\circ}$, then if $\omega L I_M > I_M/\omega C$, the phasor diagram will be of the form shown in Fig. 8.15b. Specifically, if $\omega = 377$ rad/s (i.e., $f = 60$ Hz), then $\omega L = 6$ and $1/\omega C = 2$. Under these conditions, the phasor diagram is as shown in Fig. 8.15c. If, however, we select $\mathbf{V}_S$ as reference with, for example,

$$v_S(t) = 12\sqrt{2}\cos(377t + 90^\circ)\ \text{V}$$

then

$$\mathbf{I} = \frac{\mathbf{V}}{\mathbf{Z}} = \frac{12\sqrt{2}\underline{/90^\circ}}{4 + j6 - j2}$$
$$= \frac{12\sqrt{2}\underline{/90^\circ}}{4\sqrt{2}\underline{/45^\circ}}$$
$$= 3\underline{/45^\circ}\ \text{A}$$

and the entire phasor diagram, as shown in Figs. 8.15b and c, is rotated 45°, as shown in Fig. 8.15d.

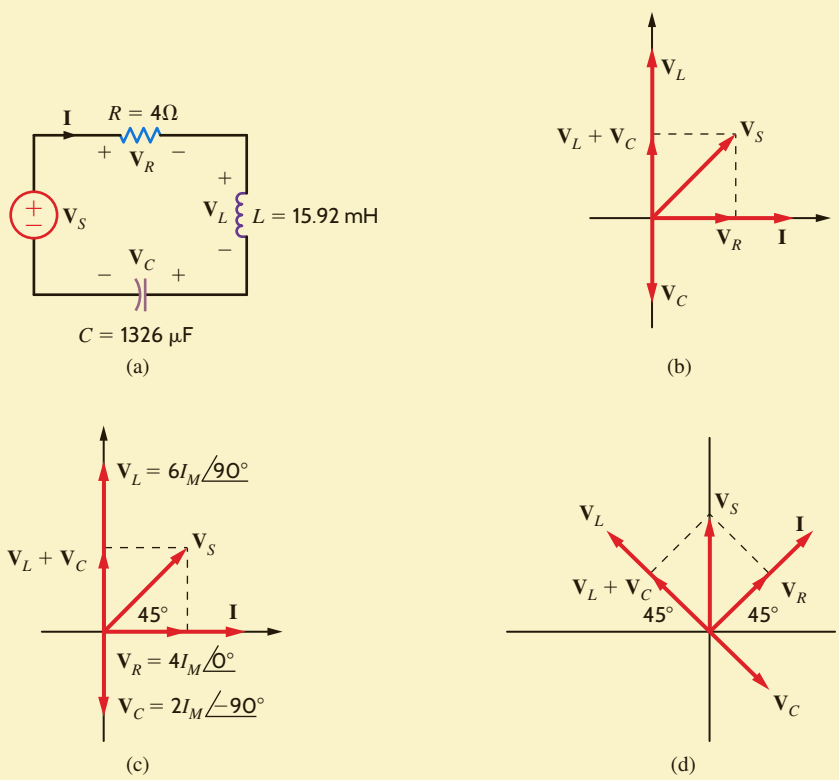

Figure 8.15
Series circuit and certain specific phasor diagrams (plots are not drawn to scale).

LEARNING ASSESSMENTS

E8.12 Draw a phasor diagram to illustrate all currents and voltages for the network in Fig. E8.12.

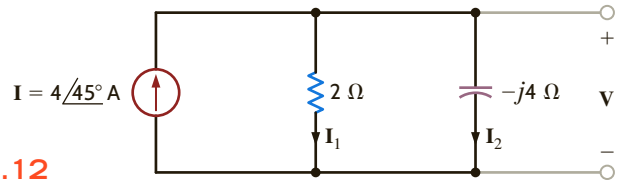

Figure E8.12

ANSWER:

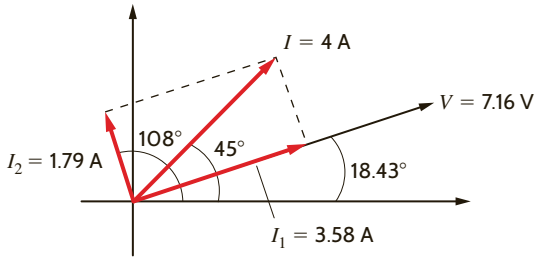

E8.13 Find the value of C such that $v(t)$ and $i(t)$ are in phase in Fig. E8.13.

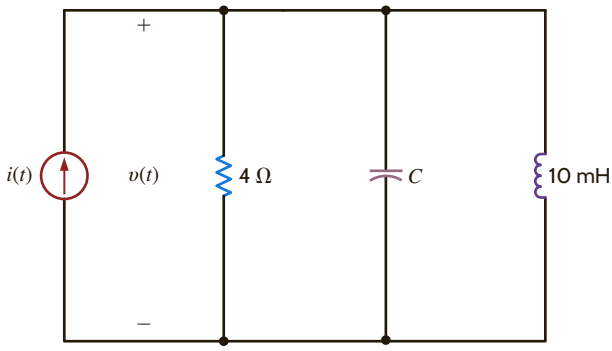

Figure E8.13

ANSWER:
$C = 400\ \mu\text{F}$.

8.7 Basic Analysis Using Kirchhoff's Laws

We have shown that Kirchhoff's laws apply in the frequency domain, and therefore they can be used to compute steady-state voltages and currents in ac circuits. This approach involves expressing these voltages and currents as phasors, and once this is done, the ac steady-state analysis employing phasor equations is performed in an identical fashion to that used in the dc analysis of resistive circuits. Complex number algebra is the tool that is used for the mathematical manipulation of the phasor equations, which, of course, have complex coefficients. We will begin by illustrating that the techniques we have applied in the solution of dc resistive circuits are valid in ac circuit analysis also—the only difference being that in steady-state ac circuit analysis the algebraic phasor equations have complex coefficients.

PROBLEM-SOLVING STRATEGY

AC STEADY-STATE ANALYSIS

- For relatively simple circuits (e.g., those with a single source), use
  - Ohm's law for ac analysis—that is, $\mathbf{V} = \mathbf{IZ}$
  - The rules for combining $\mathbf{Z}_s$ and $\mathbf{Y}_p$
  - KCL and KVL
  - Current and voltage division
- For more complicated circuits with multiple sources, use
  - Nodal analysis
  - Loop or mesh analysis
  - Superposition
  - Source exchange
  - Thévenin's and Norton's theorems

At this point, it is important for the reader to understand that in our manipulation of algebraic phasor equations with complex coefficients we will, for the sake of simplicity, normally carry only two digits to the right of the decimal point. In doing so, we will introduce round-off errors in our calculations. Nowhere are these errors more evident than when two or more approaches are used to solve the same problem, as is done in the following example.

EXAMPLE 8.14

We wish to calculate all the voltages and currents in the circuit shown in Fig. 8.16a.

SOLUTION

Our approach will be as follows. We will calculate the total impedance seen by the source $\mathbf{V}_S$. Then we will use this to determine $\mathbf{I}_1$. Knowing $\mathbf{I}_1$, we can compute $\mathbf{V}_1$ using KVL. Knowing $\mathbf{V}_1$, we can compute $\mathbf{I}_2$ and $\mathbf{I}_3$, and so on.

The total impedance seen by the source $\mathbf{V}_S$ is

$$\begin{aligned}\mathbf{Z}_{eq} &= 4 + \frac{(j6)(8 - j4)}{j6 + 8 - j4}\\ &= 4 + \frac{24 + j48}{8 + j2}\\ &= 4 + 4.24 + j4.94\\ &= 9.61\underline{/30.94^\circ}\ \Omega\end{aligned}$$

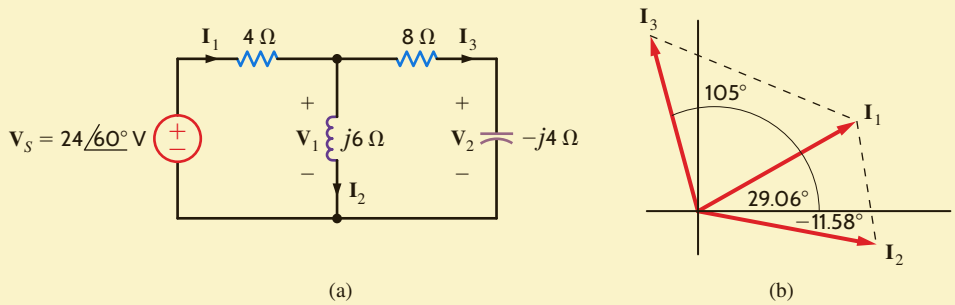

Figure 8.16
(a) Example ac circuit, (b) phasor diagram for the currents (plots are not drawn to scale).

Then

$$\begin{aligned}\mathbf{I}_1 &= \frac{\mathbf{V}_S}{\mathbf{Z}_{eq}} = \frac{24\underline{/60^\circ}}{9.61\underline{/30.94^\circ}}\\ &= 2.5\underline{/29.06^\circ}\ \text{A}\end{aligned}$$

$\mathbf{V}_1$ can be determined using KVL:

$$\begin{aligned}\mathbf{V}_1 &= \mathbf{V}_S - 4\mathbf{I}_1\\ &= 24\underline{/60^\circ} - 10\underline{/29.06^\circ}\\ &= 3.26 + j15.93\\ &= 16.26\underline{/78.43^\circ}\ \text{V}\end{aligned}$$

Note that $\mathbf{V}_1$ could also be computed via voltage division:

$$\mathbf{V}_1 = \frac{\mathbf{V}_S \dfrac{(j6)(8 - j4)}{j6 + 8 - j4}}{4 + \dfrac{(j6)(8 - j4)}{j6 + 8 - 4}}\ \text{V}$$

HINT

Technique

1. Compute $\mathbf{I}_1$.

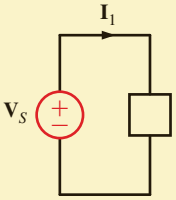

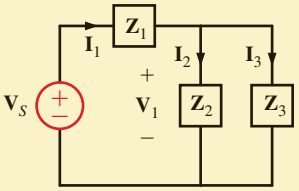

2. Determine $\mathbf{V}_1 = \mathbf{V}_s - \mathbf{I}_1\mathbf{Z}_1$

Then $\mathbf{I}_2 = \dfrac{\mathbf{V}_1}{\mathbf{Z}_2}$ and $\mathbf{I}_3 = \dfrac{\mathbf{V}_1}{\mathbf{Z}_3}$

Current and voltage division are also applicable.

which from our previous calculation is

$$\mathbf{V}_1 = \frac{(24\underline{/60^\circ})(6.51\underline{/49.36^\circ})}{9.61\underline{/30.94^\circ}}$$

$$= 16.26\underline{/78.42^\circ}\ \text{V}$$

Knowing $\mathbf{V}_1$, we can calculate both $\mathbf{I}_2$ and $\mathbf{I}_3$:

$$\mathbf{I}_2 = \frac{\mathbf{V}_1}{j6} = \frac{16.26\underline{/78.43^\circ}}{6\underline{/90^\circ}}$$

$$= 2.71\underline{/-11.58^\circ}\ \text{A}$$

and

$$\mathbf{I}_3 = \frac{\mathbf{V}_1}{8 - j4}$$

$$= 1.82\underline{/105^\circ}\ \text{A}$$

Note that $\mathbf{I}_2$ and $\mathbf{I}_3$ could have been calculated by current division. For example, $\mathbf{I}_2$ could be determined by

$$\mathbf{I}_2 = \frac{\mathbf{I}_1\,(8 - j4)}{8 - j4 + j6}$$

$$= \frac{(2.5\underline{/29.06^\circ})\,(8.94\underline{/-26.57^\circ})}{8 + j2}$$

$$= 2.71\underline{/-11.55^\circ}\ \text{A}$$

Finally, $\mathbf{V}_2$ can be computed as

$$\mathbf{V}_2 = \mathbf{I}_3\,(-j4)$$

$$= 7.28\underline{/15^\circ}\ \text{V}$$

This value could also have been computed by voltage division. The phasor diagram for the currents $\mathbf{I}_1$, $\mathbf{I}_2$, and $\mathbf{I}_3$ is shown in **Fig. 8.16b** and is an illustration of KCL.

Finally, the reader is encouraged to work the problem in reverse; that is, given $\mathbf{V}_2$, find $\mathbf{V}_S$. Note that if $\mathbf{V}_2$ is known, $\mathbf{I}_3$ can be computed immediately using the capacitor impedance. Then $\mathbf{V}_2 + \mathbf{I}_3\,(8)$ yields $\mathbf{V}_1$. Knowing $\mathbf{V}_1$ we can find $\mathbf{I}_2$. Then $\mathbf{I}_2 + \mathbf{I}_3 = \mathbf{I}_1$, and so on. Note that this analysis, which is the subject of Learning Assessment E8.16, involves simply a repeated application of Ohm's law, KCL, and KVL.

LEARNING ASSESSMENTS

E8.14 Find $v_A(t)$ in Fig. E8.14.

ANSWER:
$v_A(t) = 95.83\cos(50t + 24.1^\circ)$ V.

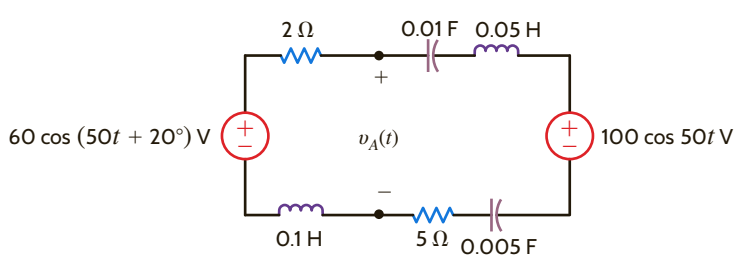

Figure E8.14

E8.15 Find $\mathbf{V}_o$ in Fig. E8.15.

ANSWER:
$\mathbf{V}_o = 2.98\angle{-153.43^\circ}$ V.

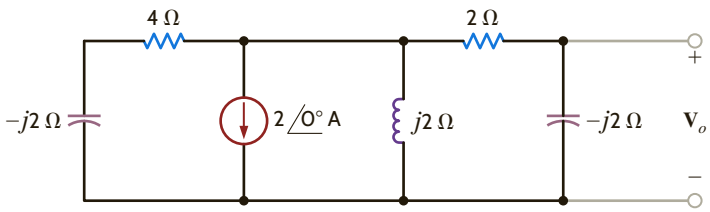

Figure E8.15

E8.16 In the network in Fig. E8.16, $\mathbf{V}_o$ is known to be $8\angle{45^\circ}$ V. Compute $\mathbf{V}_S$.

ANSWER:
$\mathbf{V}_S = 17.89\angle{-18.43^\circ}$ V.

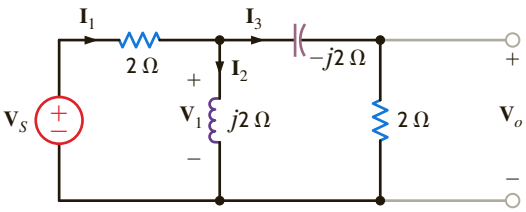

Figure E8.16

8.8 Analysis Techniques

In this section we revisit the circuit analysis methods that were successfully applied earlier to dc circuits and illustrate their applicability to ac steady-state analysis. The vehicle we employ to present these techniques is examples in which all the theorems, together with nodal analysis and loop analysis, are used to obtain a solution.

EXAMPLE 8.15

Let us determine the current $\mathbf{I}_o$ in the network in Fig. 8.17a using nodal analysis, loop analysis, superposition, source exchange, Thévenin's theorem, and Norton's theorem.

SOLUTION

1. *Nodal Analysis* We begin with a nodal analysis of the network. The KCL equation for the supernode that includes the voltage source is

$$\frac{\mathbf{V}_1}{1+j} - 2\angle{0^\circ} + \frac{\mathbf{V}_2}{1} + \frac{\mathbf{V}_2}{1-j} = 0$$

and the associated KVL constraint equation is

$$\mathbf{V}_1 + 6\angle{0^\circ} = \mathbf{V}_2$$

HINT
Summing the current, leaving the supernode. Outbound currents have a positive sign.

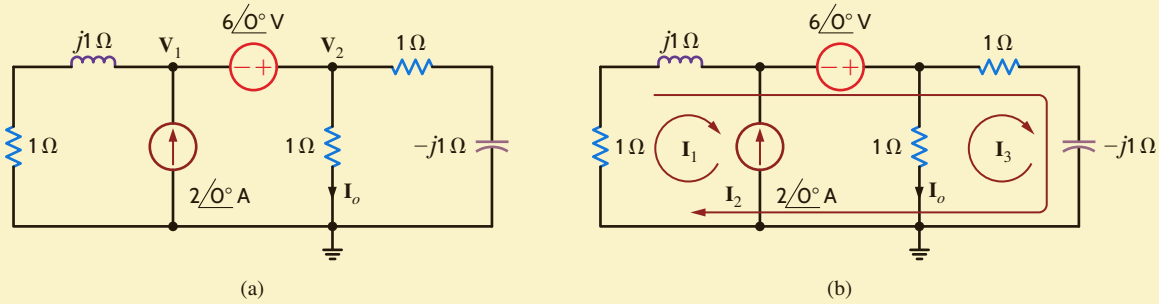

Figure 8.17
Circuits used in Example 8.15 for node and loop analysis.

The two equations in matrix form are

$$\begin{pmatrix} 0.5 - 0.5j & 1.5 + 0.5j \\ 1 & -1 \end{pmatrix}\begin{pmatrix} \mathbf{V}_1 \\ \mathbf{V}_2 \end{pmatrix} = \begin{pmatrix} 2 \\ -6 \end{pmatrix}$$

The MATLAB solution is then

```
>> Y = [0.5-0.5j 1.5+0.5j; 1 -1]
   Y =
        0.5000-0.5000i        1.5000+0.5000i
        1.0000               -1.0000

>> I = [2; -6]
   I =
         2
        -6

>> V = inv(Y)*I
   V =
        -3.5000-1.5000i
         2.5000-1.5000i

>> abs (V)
         3.8079
         2.9155

>> 180*phase(v)/pi

   Ans =
        -156.8014
         -30.9638
```

And since $\mathbf{I}_0 = \mathbf{V}_2/1$, $\mathbf{I}_0 = 2.9155\underline{/-30.9638^\circ}$ A

```
>> 180*phase(V)/pi

   ans =
        -156.8014
         -30.9638
```

And since $\mathbf{I}_0 = \mathbf{V}_2/1$, $\mathbf{I}_0 = 2.9155\underline{/-30.9638^\circ}$ A.

HINT

Just as in a dc analysis, the loop equations assume that a decrease in potential level is + and an increase is −.

2. *Loop Analysis* The network in **Fig. 8.17b** is used to perform a loop analysis. Note that one loop current is selected that passes through the independent current source. The three loop equations are

$$\mathbf{I}_1 = -2\underline{/0^\circ}$$

$$1(\mathbf{I}_1 + \mathbf{I}_2) + j1(\mathbf{I}_1 + \mathbf{I}_2) - 6\underline{/0^\circ} + 1(\mathbf{I}_2 + \mathbf{I}_3) - j1(\mathbf{I}_2 + \mathbf{I}_3) = 0$$

$$1\mathbf{I}_3 + 1(\mathbf{I}_2 + \mathbf{I}_3) - j1(\mathbf{I}_2 + \mathbf{I}_3) = 0$$

Combining the first two equations yields

$$\mathbf{I}_2(2) + \mathbf{I}_3(1 - j) = 8 + 2j$$

The third loop equation can be simplified to the form

$$\mathbf{I}_2(1 - j) + \mathbf{I}_3(2 - j) = 0$$

The equations in matrix form are

$$\begin{bmatrix} 2 & 1-j \\ 1-j & 2-j \end{bmatrix}\begin{bmatrix} \mathbf{I}_2 \\ \mathbf{I}_3 \end{bmatrix} = \begin{bmatrix} 8 + 2j \\ 0 \end{bmatrix}$$

The MATLAB solution is then

```
>> Z = [2 1-j; 1-j 2-j]
   Z =
        2.0000                1.0000 - 1.0000i
        1.0000 - 1.0000i      2.0000 - 1.0000i

>> V = [8+2*j; 0]
   V =
        8.0000 + 2.0000i
             0

>> I = inv(Z)*V
   I =
         4.5000 - 1.0000i
        -2.5000 + 1.5000i

>> abs (I)

   ans =
         4.6098
         2.9155

>> 180*phase(I)/pi

   ans =
          -12.5288
          149.0362
```

Therefore, $\mathbf{I}_3 = 2.9155\underline{/149.0362^\circ}$ and $\mathbf{I}_0 = -\mathbf{I}_3 = 2.9155\underline{/-30.9638^\circ}$ A.

HINT

In applying superposition in this case, each source is applied independently, and the results are added to obtain the solution.

3. ***Superposition*** In using superposition, we apply one independent source at a time. The network in which the current source acts alone is shown in **Fig. 8.18a**. By combining the two parallel impedances on each end of the network, we obtain the circuit in **Fig. 8.18b**, where

$$\mathbf{Z}' = \frac{(1+j)(1-j)}{(1+j)+(1-j)} = 1\ \Omega$$

Therefore, using current division,

$$\mathbf{I}_0' = 1\underline{/0^\circ}\ \text{A}$$

The circuit in which the voltage source acts alone is shown in **Fig. 8.18c**. The voltage $\mathbf{V}_1''$ obtained using voltage division is

$$\mathbf{V}_1'' = \frac{(6\underline{/0^\circ})\left[\dfrac{1(1-j)}{1+1-j}\right]}{1+j+\left[\dfrac{1(1-j)}{1+1-j}\right]} = \frac{6(1-j)}{4}\ \text{V}$$

and hence,

$$\mathbf{I}_0'' = \frac{6}{4}(1-j)\ \text{A}$$

Then

$$\mathbf{I}_o = \mathbf{I}_o' + \mathbf{I}_o'' = 1 + \frac{6}{4}(1-j) = 2.9155\underline{/-30.9638^\circ}\ \text{A}.$$

4. ***Source Exchange*** As a first step in the source exchange approach, we exchange the current source and parallel impedance for a voltage source in series with the impedance, as shown in **Fig. 8.19a**.

Figure 8.18

Circuits used in Example 8.15 for a superposition analysis.

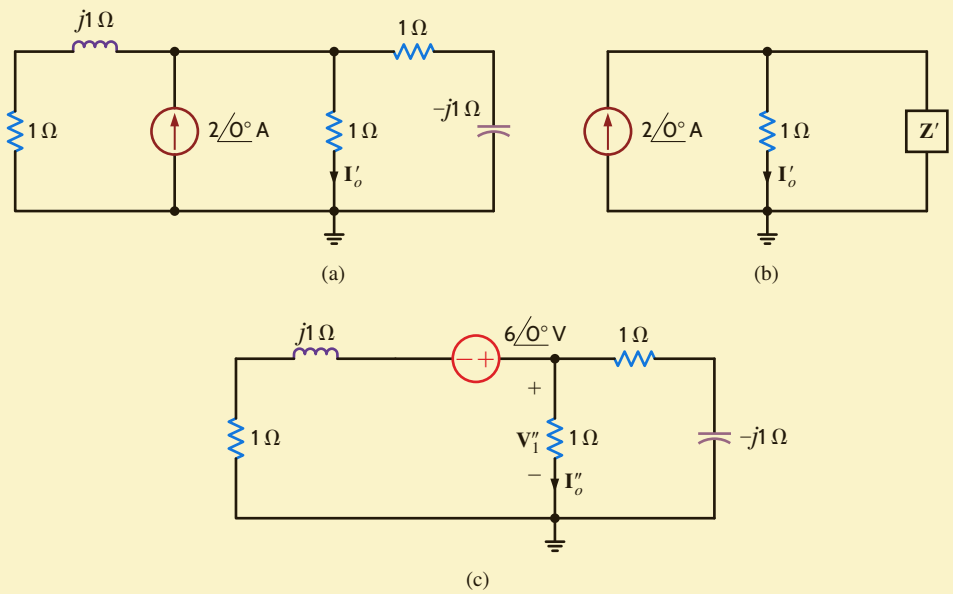

Figure 8.19

Circuits used in Example 8.15 for a source exchange analysis.

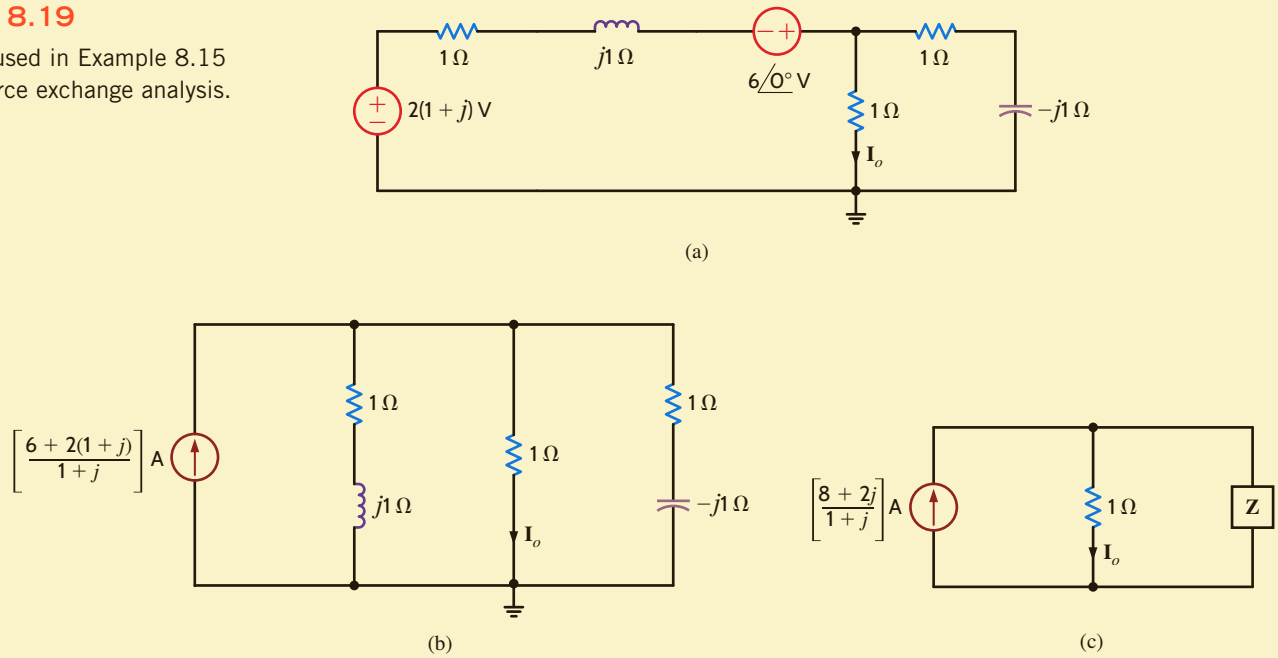

Adding the two voltage sources and transforming them and the series impedance into a current source in parallel with that impedance are shown in **Fig. 8.19b**. Combining the two impedances that are in parallel with the 1-Ω resistor produces the network in **Fig. 8.19c**, where

$$\mathbf{Z} = \frac{(1+j)(1-j)}{1+j+1-j} = 1\ \Omega$$

Therefore, using current division,

$$\mathbf{I}_o = \left(\frac{8+2j}{1+j}\right)\left(\frac{1}{2}\right) = \frac{4+j}{1+j}$$
$$= 2.9155\underline{/-30.9638^\circ}\ \text{A}$$

HINT

In source exchange, a voltage source in series with an impedance can be exchanged for a current source in parallel with the impedance and vice versa. Repeated application systematically reduces the number of circuit elements.

5. *Thévenin Analysis* In applying Thévenin's theorem to the circuit in Fig. 8.17a, we first find the open-circuit voltage, $\mathbf{V}_{oc}$, as shown in **Fig. 8.20a**. To simplify the analysis, we perform a source exchange on the left end of the network, which results in the circuit in **Fig. 8.20b**. Now using voltage division,

$$\mathbf{V}_{oc} = [6 + 2(1 + j)]\left[\frac{1 - j}{1 - j + 1 + j}\right]$$

or

$$\mathbf{V}_{oc} = (5 - 3j)\ \text{V}$$

The Thévenin equivalent impedance, $\mathbf{Z}_{Th}$, obtained at the open-circuit terminals when the current source is replaced with an open circuit and the voltage source is replaced with a short circuit, is shown in **Fig. 8.20c** and calculated to be

$$\mathbf{Z}_{Th} = \frac{(1 + j)(1 - j)}{1 + j + 1 - j} = 1\ \Omega$$

Connecting the Thévenin equivalent circuit to the 1-Ω resistor containing $\mathbf{I}_o$ in the original network yields the circuit in **Fig. 8.20d**. The current $\mathbf{I}_o$ is then

$$\mathbf{I}_o = 2.9155\underline{/-30.9638^\circ}\ \text{A}$$

HINT

In this Thévenin analysis,

1. Remove the 1-Ω load and find the voltage across the open terminals, $\mathbf{V}_{oc}$.
2. Determine the impedance $\mathbf{Z}_{Th}$ at the open terminals with all sources made zero.
3. Construct the following circuit and determine $\mathbf{I}_o$.

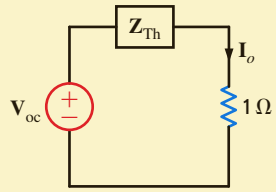

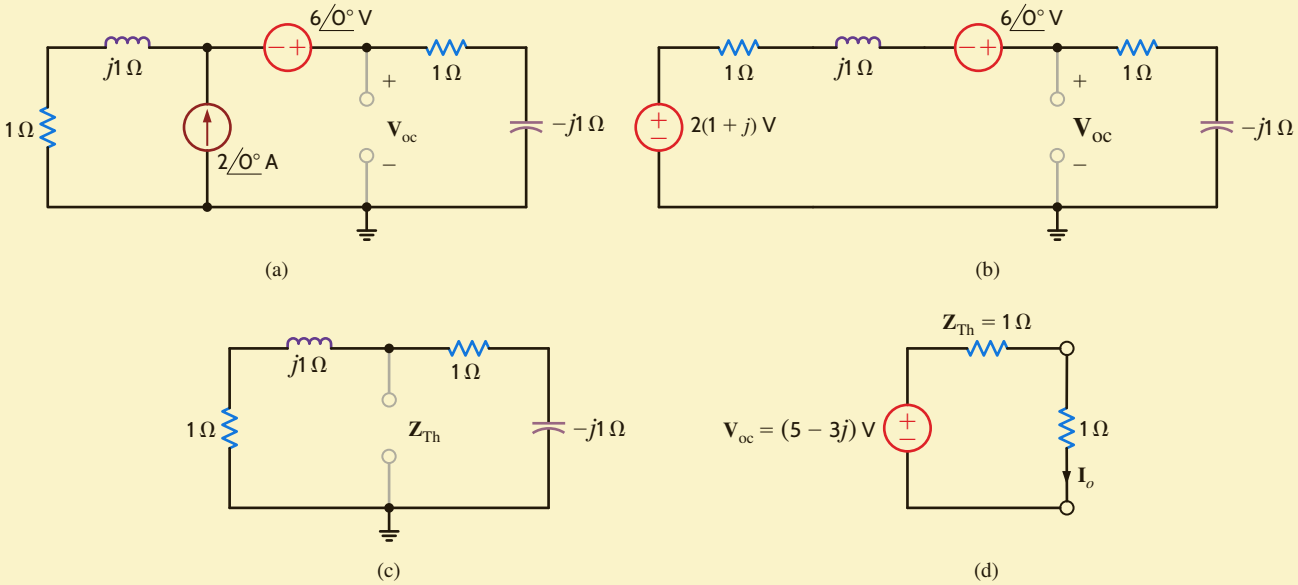

Figure 8.20

Circuits used in Example 8.15 for a Thévenin analysis.

6. *Norton Analysis* Finally, in applying Norton's theorem to the circuit in Fig. 8.17a, we calculate the short-circuit current, $\mathbf{I}_{sc}$, using the network in **Fig. 8.21a**. Note that because of the short circuit, the voltage source is directly across the impedance in the left-most branch. Therefore,

$$\mathbf{I}_1 = \frac{6\underline{/0^\circ}}{1 + j}$$

Then, using KCL,

$$\mathbf{I}_{sc} = \mathbf{I}_1 + 2\underline{/0^\circ} = 2 + \frac{6}{1 + j}$$
$$= \left(\frac{8 + 2j}{1 + j}\right)\text{A}$$

HINT

In this Norton analysis,

1. Remove the 1-Ω load and find the current $\mathbf{I}_{sc}$ through the short-circuited terminals.
2. Determine the impedance $\mathbf{Z}_{Th}$ at the open load terminals with all sources made zero.
3. Construct the following circuit and determine $\mathbf{I}_o$.

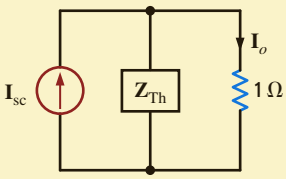

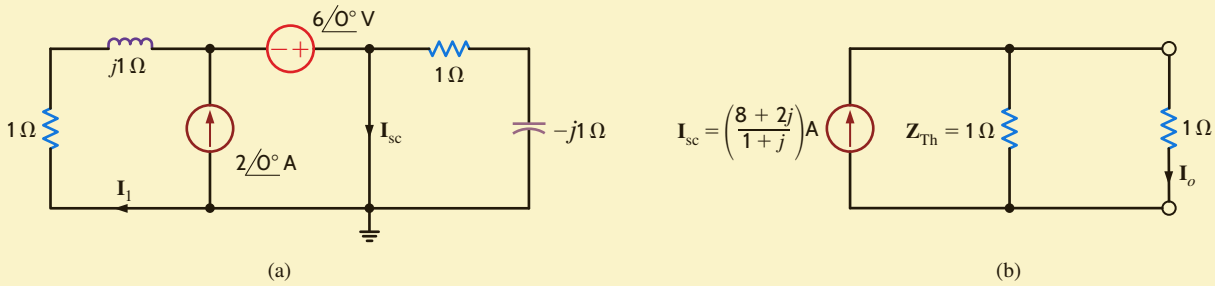

Figure 8.21

Circuits used in Example 8.15 for a Norton analysis.

The Thévenin equivalent impedance, $\mathbf{Z}_{\text{Th}}$, is known to be 1 Ω and, therefore, connecting the Norton equivalent to the 1-Ω resistor containing $\mathbf{I}_o$ yields the network in **Fig. 8.21b**. Using current division, we find that

$$\mathbf{I}_o = \frac{1}{2}\left(\frac{8+2j}{1+j}\right)$$
$$= 2.9155\angle{-30.9638^\circ}\ \text{A}$$

Let us now consider an example containing a dependent source.

EXAMPLE 8.16

Let us determine the voltage $\mathbf{V}_o$ in the circuit in **Fig. 8.22a**. In this example we will use node equations, loop equations, Thévenin's theorem, and Norton's theorem. We will omit the techniques of superposition and source transformation. Why?

SOLUTION

1. ***Nodal Analysis*** To perform a nodal analysis, we label the node voltages and identify the supernode as shown in **Fig. 8.22b**. The constraint equation for the supernode is

$$\mathbf{V}_3 + 12\angle{0^\circ} = \mathbf{V}_1$$

Figure 8.22

Circuits used in Example 8.16 for nodal and loop analysis.

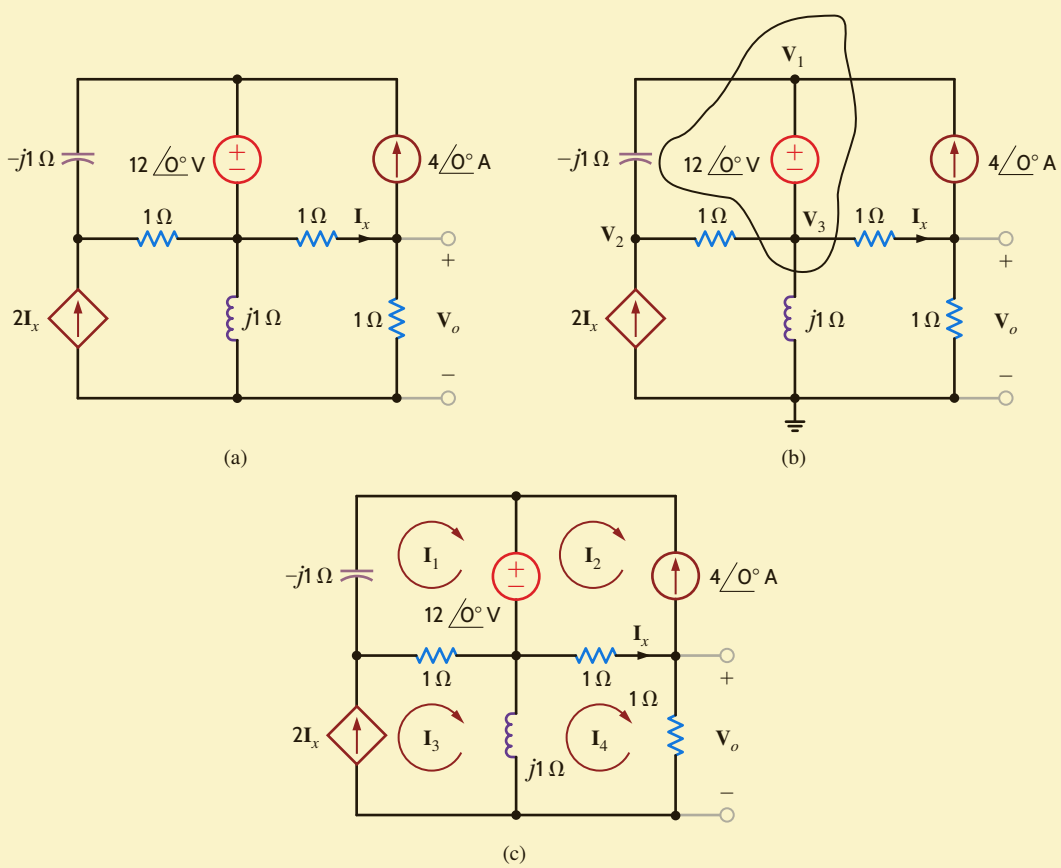

and the KCL equations for the nodes of the network are

$$\frac{\mathbf{V}_1 - \mathbf{V}_2}{-j1} + \frac{\mathbf{V}_3 - \mathbf{V}_2}{1} - 4\underline{/0^\circ} + \frac{\mathbf{V}_3 - \mathbf{V}_o}{1} + \frac{\mathbf{V}_3}{j1} = 0$$

$$\frac{\mathbf{V}_2 - \mathbf{V}_1}{-j1} + \frac{\mathbf{V}_2 - \mathbf{V}_3}{1} - 2\left(\frac{\mathbf{V}_3 - \mathbf{V}_o}{1}\right) = 0$$

$$4\underline{/0^\circ} + \frac{\mathbf{V}_o - \mathbf{V}_3}{1} + \frac{\mathbf{V}_o}{1} = 0$$

HINT

How does the presence of a dependent source affect superposition and source exchange?

The matrix equation is

$$\begin{bmatrix} -1 & 0 & 1 & 0 \\ j & -(1+j) & 2-j & -1 \\ -j & 1+j & -3 & 2 \\ 0 & 0 & -1 & 2 \end{bmatrix} \begin{bmatrix} \mathbf{V}_1 \\ \mathbf{V}_2 \\ \mathbf{V}_3 \\ \mathbf{V}_0 \end{bmatrix} = \begin{bmatrix} -12 \\ 4 \\ 0 \\ -4 \end{bmatrix}$$

The MATLAB solution is then

```
>> Y = [-1 0 1 0; j -(1+j) 2-j -1; -j 1+j -3 2;0 0 -1 2]
   Y =
        -1.0000                    0              1.0000                    0
              0 + 1.0000i   -1.0000 - 1.0000i    2.0000 - 1.0000i   -1.0000
              0 - 1.0000i    1.0000 + 1.0000i   -3.0000              2.0000
              0                    0             -1.0000              2.0000

>> I = [-12; 4; 0; -4]
   I =
            -12
              4
              0
             -4

>> V = inv(Y)*I
   V =
         9.6000 +  4.8000i
         6.8000 + 12.4000i
        -2.4000 +  4.8000i
        -3.2000 +  2.4000i

>> abs (V)
   ans =
         10.7331
         14.1421
          5.3666
          4.0000

>> 180*phase(V)/pi
   ans =
          26.5651
          61.2602
         116.5651
         143.1301
```

And therefore,

$$\mathbf{V}_o = 4\underline{/143.13^\circ}\ \text{V}$$

2. *Loop Analysis* The mesh currents for the network are defined in Fig. 8.22c. The constraint equations for the circuit are

$$\mathbf{I}_2 = -4\underline{/0^\circ}$$
$$\mathbf{I}_x = \mathbf{I}_4 - \mathbf{I}_2 = \mathbf{I}_4 + 4\underline{/0^\circ}$$
$$\mathbf{I}_3 = 2\mathbf{I}_x = 2\mathbf{I}_4 + 8\underline{/0^\circ}$$

The KVL equations for mesh 1 and mesh 4 are

$$-j1\mathbf{I}_1 + 1(\mathbf{I}_1 - \mathbf{I}_3) = -12\underline{/0^\circ}$$
$$j1(\mathbf{I}_4 - \mathbf{I}_3) + 1(\mathbf{I}_4 - \mathbf{I}_2) + 1\mathbf{I}_4 = 0$$

Note that if the constraint equations are substituted into the second KVL equation, the only unknown in the equation is $\mathbf{I}_4$. This substitution yields

$$\mathbf{I}_4 = 4\underline{/143.13^\circ}\ \text{A}$$

and hence,

$$\mathbf{V}_o = 4\underline{/143.13^\circ}\ \text{V}$$

3. *Thévenin's Theorem* In applying Thévenin's theorem, we will find the open-circuit voltage and then determine the Thévenin equivalent impedance using a test source at the open-circuit terminals. We could determine the Thévenin equivalent impedance by calculating the short-circuit current; however, we will determine this current when we apply Norton's theorem.

The open-circuit voltage is determined from the network in Fig. 8.23a. Note that $\mathbf{I}'_x = 4\underline{/0^\circ}$ A and since $2\mathbf{I}'_x$ flows through the inductor, the open-circuit voltage $\mathbf{V}_{oc}$ is

$$\mathbf{V}_{oc} = -1(4\underline{/0^\circ}) + j1(2\mathbf{I}'_x)$$
$$= -4 + j8\ \text{V}$$

To determine the Thévenin equivalent impedance, we turn off the independent sources, apply a test voltage source to the output terminals, and compute the current leaving the test source. As shown in Fig. 8.23b, since $\mathbf{I}''_x$ flows in the test source, KCL requires that the current in the inductor be $\mathbf{I}''_x$ also. KVL around the mesh containing the test source indicates that

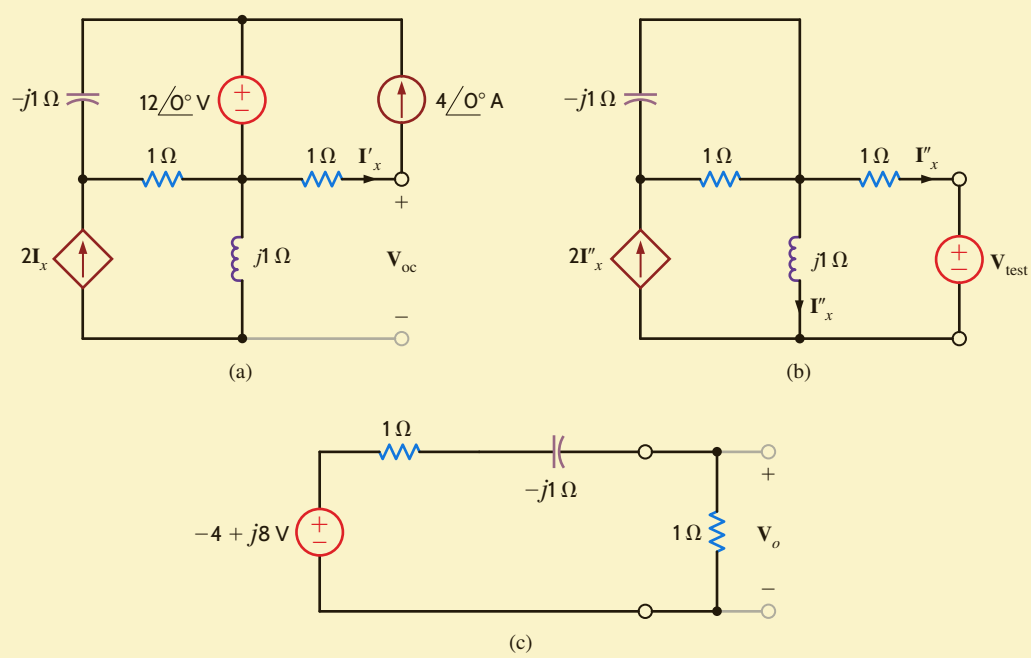

Figure 8.23
Circuits used in Example 8.16 when applying Thévenin's theorem.

$$j1\mathbf{I}''_x - 1\mathbf{I}''_x - \mathbf{V}_{\text{test}} = 0$$

Therefore,

$$\mathbf{I}''_x = \frac{-\mathbf{V}_{\text{test}}}{1 - j}$$

Then

$$\mathbf{Z}_{\text{Th}} = \frac{\mathbf{V}_{\text{test}}}{-\mathbf{I}''_x}$$
$$= 1 - j\Omega$$

If the Thévenin equivalent network is now connected to the load, as shown in **Fig. 8.23c**, the output voltage $\mathbf{V}_o$ is found to be

$$\mathbf{V}_o = \frac{-4 + 8j}{2 - j1}(1)$$
$$= 4\underline{/143.13^\circ}\ \text{V}$$

4. ***Norton's Theorem*** In using Norton's theorem, we will find the short-circuit current from the network in **Fig. 8.24a**. Once again, using the supernode, the constraint and KCL equations are

$$\mathbf{V}_3 + 12\underline{/0^\circ} = \mathbf{V}_1$$
$$\frac{\mathbf{V}_2 - \mathbf{V}_1}{-j1} + \frac{\mathbf{V}_2 - \mathbf{V}_3}{1} - 2\mathbf{I}'''_x = 0$$
$$\frac{\mathbf{V}_1 - \mathbf{V}_2}{-j1} + \frac{\mathbf{V}_3 - \mathbf{V}_2}{1} - 4\underline{/0^\circ} + \frac{\mathbf{V}_3}{j1} + \mathbf{I}'''_x = 0$$
$$\mathbf{I}'''_x = \frac{\mathbf{V}_3}{1}$$

The matrix equation is

$$\begin{bmatrix} -1 & 0 & 1 & 0 \\ -j & (1+j) & -1 & -2 \\ j & -(1+j) & 1-j & 1 \\ 0 & 0 & -1 & 1 \end{bmatrix} \begin{bmatrix} \mathbf{V}_1 \\ \mathbf{V}_2 \\ \mathbf{V}_3 \\ \mathbf{I}'''_x \end{bmatrix} = \begin{bmatrix} -12 \\ 0 \\ 4 \\ 0 \end{bmatrix}$$

The MATLAB solution is then

```
>> Y = [-1 0 1 0; -j 1+j -1 -2; j -(1+j) 1-j 1; 0 0 -1 1]
   Y =
        -1.0000                    0              1.0000                    0
              0 - 1.0000i    1.0000 + 1.0000i    -1.0000              -2.0000
              0 + 1.0000i   -1.0000 - 1.0000i     1.0000 - 1.0000i     1.0000
              0                    0             -1.0000               1.0000

>> I = [-12; 0; 4; 0]
   I =
           -12
             0
             4
             0

>> V = inv(Y)*I
   V =
       10.0000 +  2.0000i
        4.0000 + 12.0000i
       -2.0000 +  2.0000i
       -2.0000 +  2.0000i
```

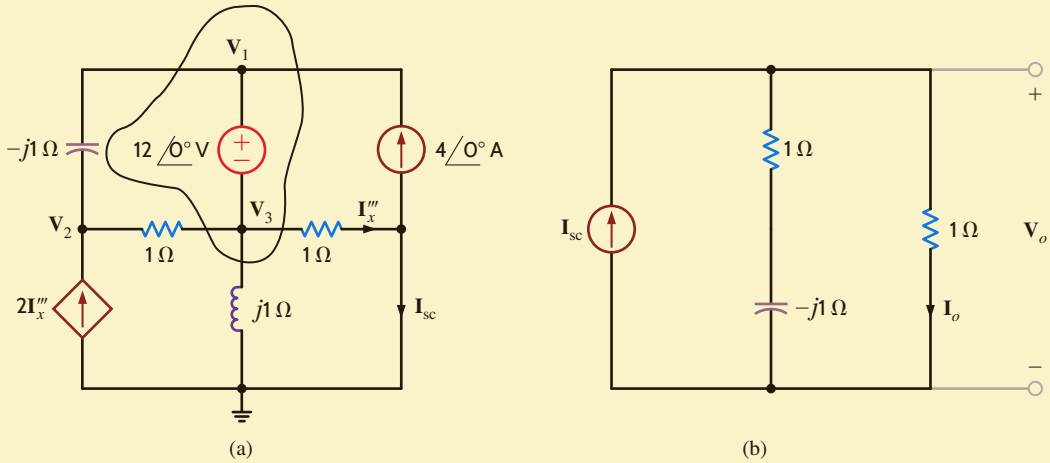

Figure 8.24

Circuits used in Example 8.16 when applying Norton's theorem.

```
>> abs (V)
   ans =
        10.1980
        12.6491
         2.8284
         2.8284

>> 180*phase(V)/pi
   ans =
         11.3099
         71.5651
        135.0000
        135.0000
```

or

$$\mathbf{I}_x''' = 2.8284\underline{/135^\circ}\ \text{A}$$

The KCL equation at the right-most node in the network in Fig. 8.24a is

$$\mathbf{I}_x''' = 4\underline{/0^\circ} + \mathbf{I}_{sc}$$

Solving for $\mathbf{I}_{sc}$, we obtain

$$\mathbf{I}_{sc} = 6.3245\underline{/161.57^\circ}\ \text{A}$$

The Thévenin equivalent impedance was found earlier to be

$$\mathbf{Z}_{Th} = 1 - j\ \Omega$$

Using the Norton equivalent network, the original network is reduced to that shown in Fig. 8.24b. The voltage $\mathbf{V}_o$ is then

$$\begin{aligned}\mathbf{V}_o &= \mathbf{I}_{sc}\{(1)(1-j)/(1+1-j)\}\ \text{V}\\ &= 4\underline{/143.13^\circ}\ \text{V}\end{aligned}$$

LEARNING ASSESSMENTS

E8.17 Use nodal analysis to find $\mathbf{V}_o$ in the network in Fig. E8.17.

ANSWER:
$\mathbf{V}_o = 2.12\angle 75^\circ$ V.

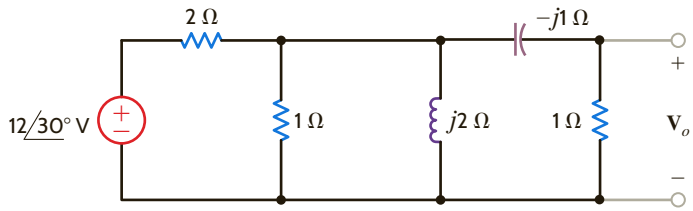

Figure E8.17

E8.18 Find $\mathbf{I}_1$ in Fig. E8.18 using nodal analysis.

ANSWER:
$\mathbf{I}_1 = 0.7781\angle -161.9^\circ$ A.

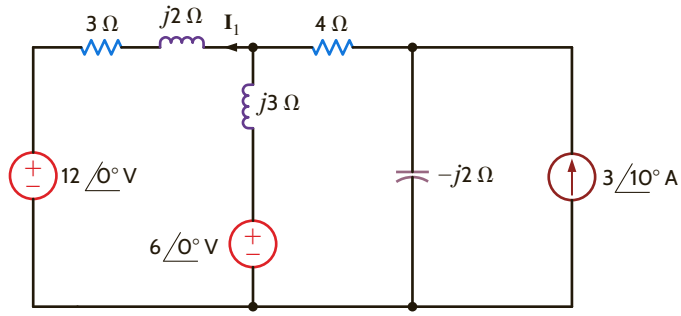

Figure E8.18

E8.19 Find $\mathbf{V}_x$ in Fig. E8.19 using (a) nodal analysis and (b) mesh analysis.

ANSWER:
$\mathbf{V}_x = 17.4\angle -21.62^\circ$ V.

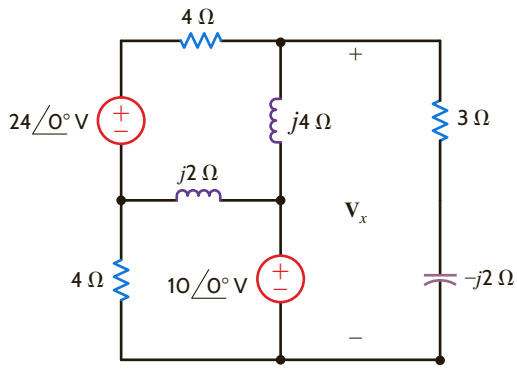

Figure E8.19

E8.20 Use (a) mesh equations and (b) Thévenin's theorem to find $\mathbf{V}_o$ in the network in Fig. E8.20.

ANSWER:
$\mathbf{V}_o = 10.88\angle 36^\circ$ V.

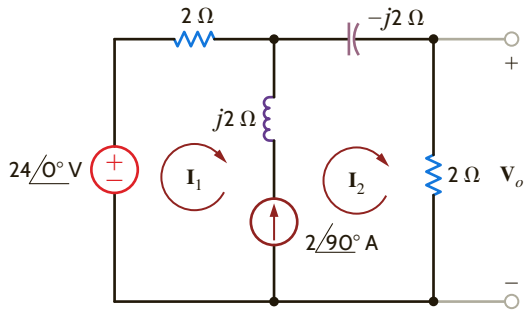

Figure E8.20

E8.21 Find $\mathbf{V}_o$ in Fig. E8.21 using mesh analysis.

ANSWER:
$\mathbf{V}_o = 1.4654\underline{/-12.34^\circ}$ V.

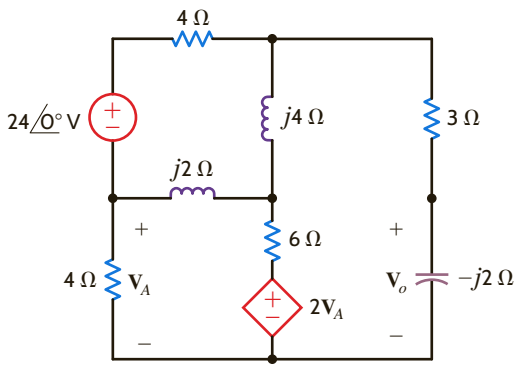

Figure E8.21

E8.22 Find $\mathbf{I}_1$ in Fig. E8.18 using superposition.

ANSWER:
$\mathbf{I}_1 = 0.7781\underline{/-161.9^\circ}$ V.

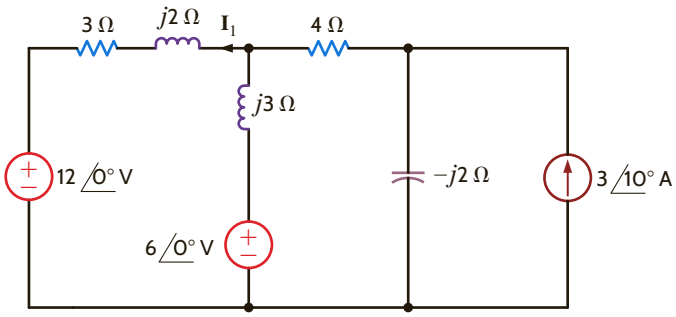

Figure E8.22

E8.23 Use (a) superposition, (b) source transformation, and (c) Norton's theorem to find $\mathbf{V}_o$ in the network in Fig. E8.23.

ANSWER:
$\mathbf{V}_o = 12\underline{/90^\circ}$ V.

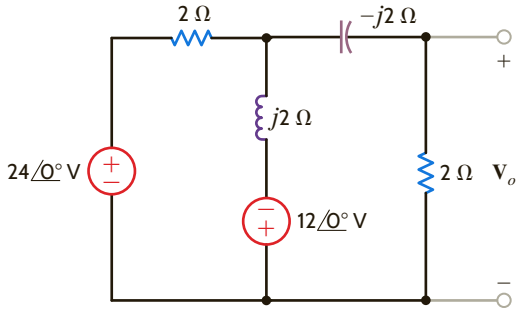

Figure E8.23

E8.24 Find $\mathbf{V}_o$ in Fig. E8.24 using Thevenin's theorem.

ANSWER:
$\mathbf{V}_o = 1.4654\underline{/-12.34^\circ}$ V.

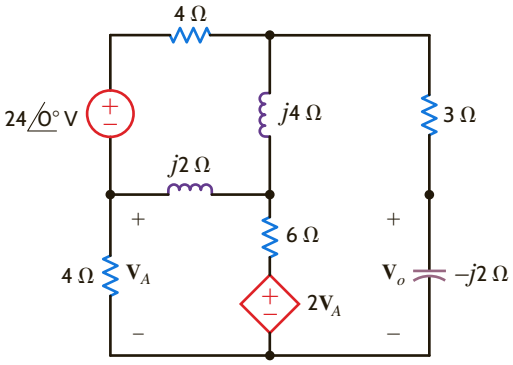

Figure E8.24

EXAMPLE 8.17

Let's solve for the current $i(t)$ in the circuit in **Fig. 8.25**. At first glance, this appears to be a simple single-loop circuit. A more detailed observation reveals that the two sources operate at different frequencies. The radian frequency for the source on the left is 10 rad/s, while the source on the right operates at a radian frequency of 20 rad/s. If we draw a frequency-domain circuit, which frequency do we use? How can we solve this problem?

SOLUTION

Recall that the principle of superposition tells us that we can analyze the circuit with each source operating alone. The circuit responses to each source acting alone are then added together to give us the response with both sources active. Let's use the principle of superposition to solve this problem. First, calculate the response $i'(t)$ from the source on the left using the circuit shown in **Fig. 8.26a**. Now we can draw a frequency-domain circuit for $\omega = 10$ rad/s, as shown in **Fig. 8.26b**.

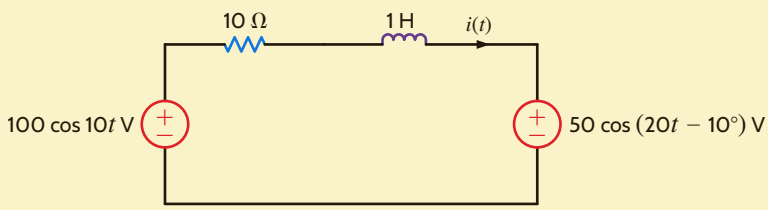

Figure 8.25 Circuit used in Example 8.17.

Then $\mathbf{I}' = \dfrac{100\angle 0^\circ}{10 + j10} = 7.07\angle -45^\circ$ A. Therefore, $i'(t) = 7.07\cos(10t - 45^\circ)$ A.

The response due to the source on the right can be determined using the circuit in **Fig. 8.27a**. Note that $i''(t)$ is defined in the opposite direction to $i(t)$ in the original circuit. The frequency-domain circuit for $\omega = 20$ rad/s is also shown in **Fig. 8.27b**.

The current $\mathbf{I}'' = \dfrac{50\angle -10^\circ}{10 + j20} = 2.24\angle -73.43^\circ$ A. Therefore, $i''(t) = 2.24\cos(20t - 73.43^\circ)$ A.

The current $i(t)$ can now be calculated as $i'(t) - i''(t) = 7.07\cos(10t - 45^\circ) - 2.24\cos(20t - 73.43^\circ)$ A.

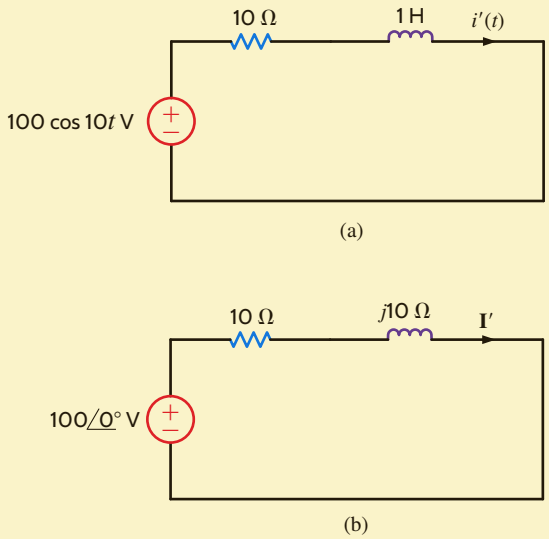

Figure 8.26 Circuits used to illustrate superposition.

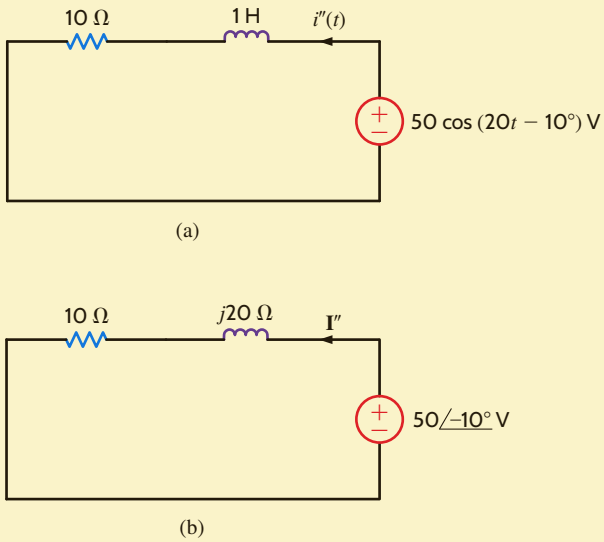

Figure 8.27 Circuits used to illustrate superposition.

SUMMARY

- ***The sinusoidal function definition*** The sinusoidal function $x(t) = X_M \sin(\omega t + \theta)$ has an amplitude of X_M, a radian frequency of ω, a period of $2\pi/\omega$, and a phase angle of θ.
- ***The phase lead and phase lag definitions*** If $x_1(t) = X_{M_1} \sin(\omega t + \theta)$ and $x_2(t) = X_{M_2} \sin(\omega t + \phi)$, $x_1(t)$ leads $x_2(t)$ by $\theta - \phi$ radians and $x_2(t)$ lags $x_1(t)$ by $\theta - \phi$ radians.
- ***The phasor definition*** The sinusoidal voltage $v(t) = V_M \cos(\omega t + \theta)$ can be written in exponential form as $v(t) = \mathrm{Re}\left[V_M e^{j(\omega t + \theta)}\right]$ and in phasor form as $\mathbf{V} = V_M \angle\underline{\theta}$.
- ***The phase relationship in θ_v and θ_i for elements R, L, and C*** If θ_v and θ_i represent the phase angles of the voltage across and the current through a circuit element, then $\theta_i = \theta_v$ if the element is a resistor, θ_i lags θ_v by 90° if the element is an inductor, and θ_i leads θ_v by 90° if the element is a capacitor.
- ***The impedances of R, L, and C*** Impedance, $\mathbf{Z}$, is defined as the ratio of the phasor voltage, $\mathbf{V}$, to the phasor current, $\mathbf{I}$, where $\mathbf{Z} = R$ for a resistor, $\mathbf{Z} = j\omega L$ for an inductor, and $\mathbf{Z} = 1/j\omega C$ for a capacitor.
- ***The phasor diagrams*** Phasor diagrams can be used to display the magnitude and phase relationships of various voltages and currents in a network.
- ***Frequency-domain analysis***
  1. Represent all voltages, $v_i(t)$, and all currents, $i_j(t)$, as phasors and represent all passive elements by their impedance or admittance.
  2. Solve for the unknown phasors in the frequency (ω) domain.
  3. Transform the now-known phasors back to the time domain.
- ***Solution techniques for ac steady-state problems***

  Ohm's law
  KCL and KVL
  Nodal and loop analysis
  Superposition and source exchange
  Thévenin's theorem
  Norton's theorem

PROBLEMS

8.1 Given $i(t) = 5 \cos(400t - 120°)$ A, determine the period of the current and the frequency in Hertz.

8.2 Determine the relative phase relationship of the two waves

$$v_1(t) = 10 \cos(377t - 30°) \text{ V}$$
$$v_2(t) = 10 \cos(377t + 90°) \text{ V}$$

8.3 Given the following voltage and current:

$$i(t) = 5 \sin(377t - 20°) \text{ V}$$
$$v(t) = 10 \cos(377t + 30°) \text{ V}$$

Determine the phase relationship between $i(t)$ and $v(t)$.

8.4 Write the expression for the waveform shown in Fig. P8.4 as a cosine function with numerical values for the amplitude, frequency, and phase.

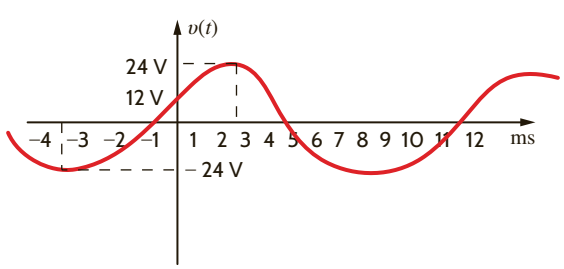

Figure P8.4

8.5 Calculate the current in the resistor in Fig. P8.5 if the voltage input is

(a) $v_1(t) = 10 \cos(377t + 180°)$ V.

(b) $v_2(t) = 12 \sin(377t + 45°)$ V.

Give the answers in both the time and frequency domains.

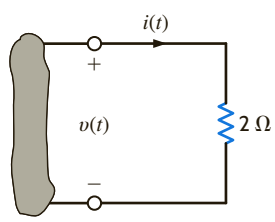

Figure P8.5

8.6 Calculate the current in the capacitor shown in Fig. P8.6 if the voltage input is

(a) $v_1(t) = 10 \cos(377t - 30°)$ V.

(b) $v_2(t) = 12 \sin(377t + 60°)$ V.

Give the answers in both the time and frequency domains.

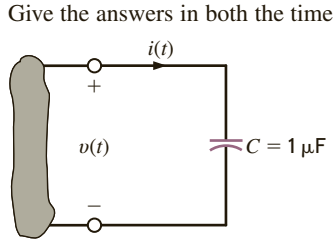

Figure P8.6

8.7 Determine the phase angles by which $v_1(t)$ leads $i_1(t)$ and $v_1(t)$ leads $i_2(t)$, where

$$v_1(t) = 4 \sin (377t + 25°) \text{ V}$$
$$i_1(t) = 0.05 \cos (377t - 20°) \text{ A}$$
$$i_2(t) = -0.1 \sin (377t + 45°) \text{ A}$$

8.8 Find the frequency-domain impedance. **Z**, as shown in Fig. P8.8.

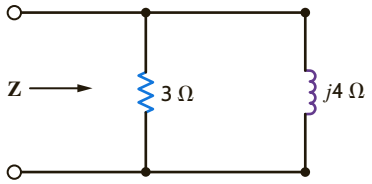

Figure P8.8

8.9 Calculate the current in the inductor shown in Fig. P8.9 if the voltage input is

(a) $v_1(t) = 10 \cos (377t + 45°)$ V

(b) $v_2(t) = 5 \sin (377t - 90°)$ V

Give the answers in both the time and frequency domains.

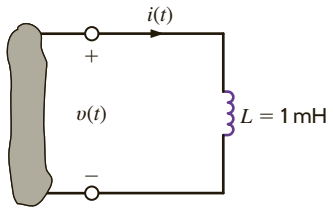

Figure P8.9

8.10 Find the frequency-domain impedance, **Z**, in the network in Fig. P8.10.

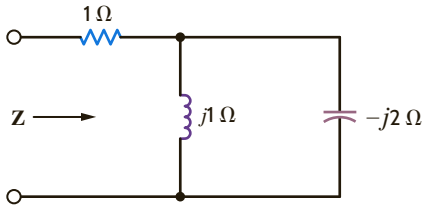

Figure P8.10

8.11 Find **Z** in the network in Fig. P8.11.

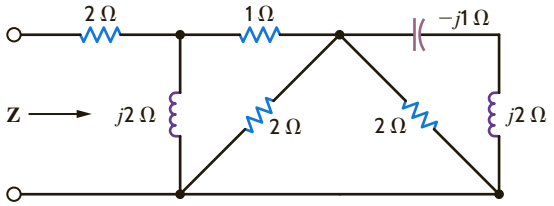

Figure P8.11

8.12 Find the impedance, **Z**, shown in Fig. P8.12 at a frequency of 400 Hz.

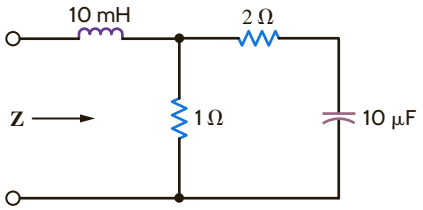

Figure P8.12

8.13 Find the frequency-domain impedance, **Z**, as shown in Fig. P8.13.

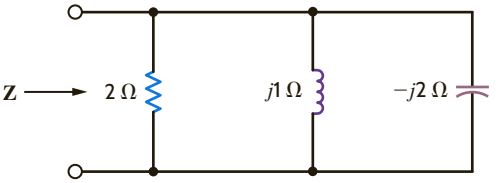

Figure P8.13

8.14 Find the impedance, **Z**, shown in Fig. P8.14 at a frequency of 60 Hz.

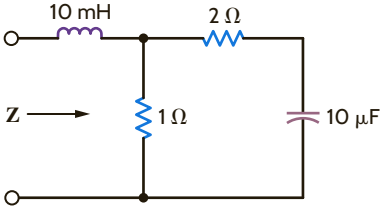

Figure P8.14

8.15 Find **Y** in the network in Fig. P8.15.

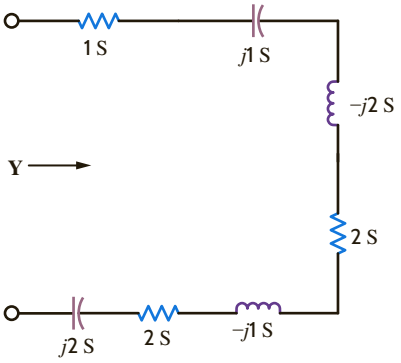

Figure P8.15

8.16 Find the equivalent impedance for the circuit in Fig. P8.16.

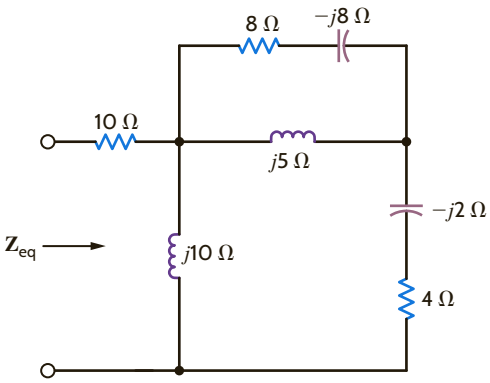

Figure P8.16

8.17 Find the frequency-domain impedance, **Z**, shown in Fig. P8.17.

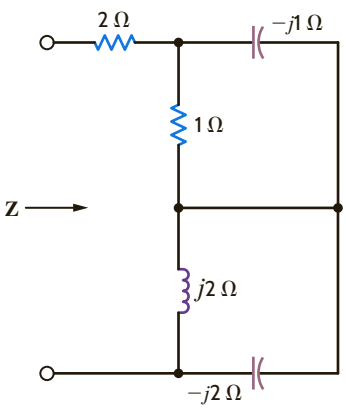

Figure P8.17

8.18 Find the impedance, **Z**, shown in Fig. P8.18 at a frequency of 60 Hz.

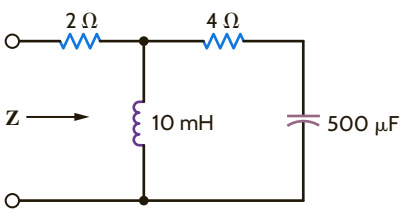

Figure P8.18

8.19 Find the frequency-domain impedance, **Z**, shown in Fig. P8.19.

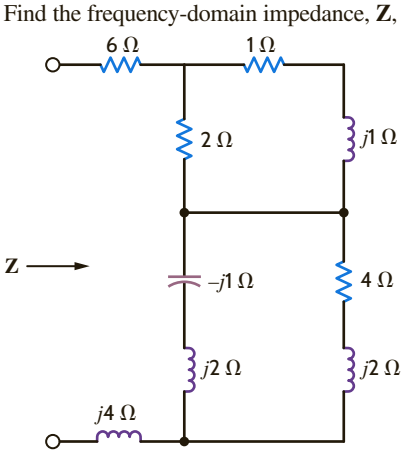

Figure P8.19

8.20 In the circuit shown in Fig. P8.20, determine the value of the inductance such that the current is in phase with the source voltage.

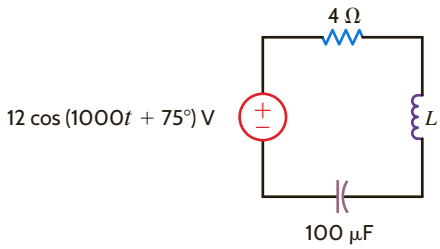

Figure P8.20

8.21 Find the value of C in the circuit shown in Fig. P8.21 so that **Z** is purely resistive at a frequency of 60 Hz.

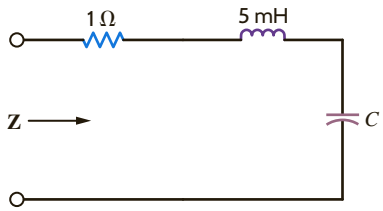

Figure P8.21

8.22 The impedance of the network in Fig. P8.22 is found to be purely real at $f = 400$ Hz. What is the value of C?

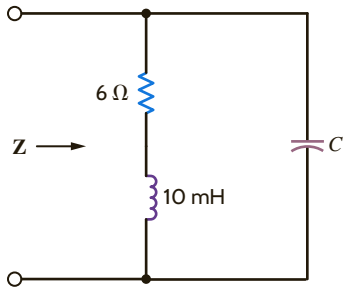

Figure P8.22

8.23 The admittance of the box in Fig. P8.23 is $0.1 + j0.2$ S at 500 rad/s. What is the impedance at 300 rad/s?

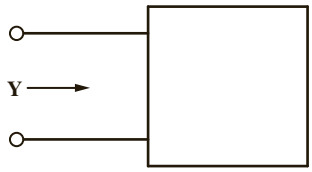

Figure P8.23

8.24 The impedance of the box in Fig. P8.24 is $5 + j4\ \Omega$ at 1000 rad/s. What is the impedance at 1300 rad/s?

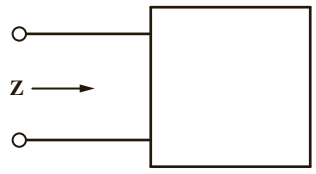

Figure P8.24

8.25 Draw the frequency-domain network and calculate $v_o(t)$ in the circuit shown in Fig. P8.25 if $i_1(t)$ is 200 cos$(10^5t + 60°)$ mA, $i_2(t)$ is 100 sin $10^5(t + 90°)$ mA, and $v_S(t) = 10 \sin(10^5t)$ V. Also, use a phasor diagram to determine $v_C(t)$.

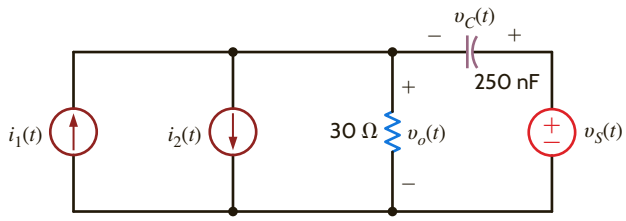

Figure P8.25

8.26 The impedance of the circuit in Fig. P8.26 is real at $f = 60$ Hz. What is the value of L?

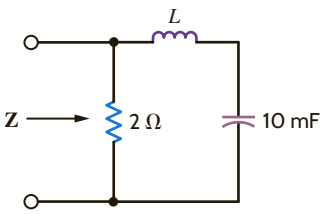

Figure P8.26

8.27 Find the frequency at which the circuit shown in Fig. P8.27 is purely resistive.

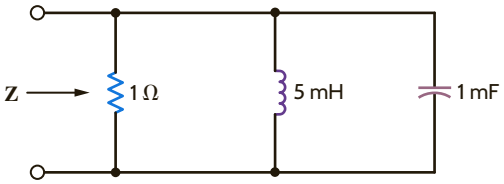

Figure P8.27

8.28 Find $v_S(t)$ in the circuit in Fig. P8.28.

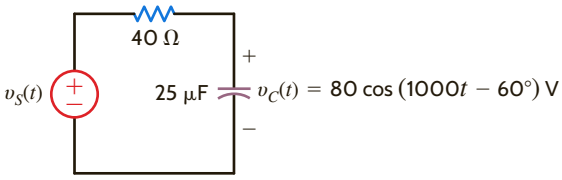

Figure P8.28

8.29 Draw the frequency-domain network and calculate $i(t)$ in the circuit shown in Fig. P8.29 if $v_S(t)$ is 15 sin (10,000t) V. Also, using a phasor diagram, show that $v_C(t) + v_R(t) = v_S(t)$.

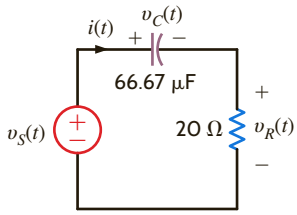

Figure P8.29

8.30 Draw the frequency-domain network and calculate $v_o(t)$ in the circuit shown in Fig. P8.30 if $i_S(t)$ is 1 cos $(2500t - 45°)$ A. Also, using a phasor diagram, show that $i_C(t) + i_R(t) = i_S(t)$.

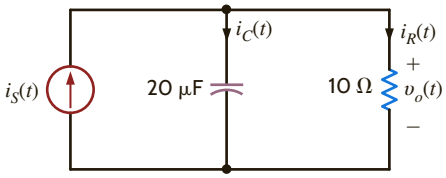

Figure P8.30

8.31 Find $i_C(t)$ and $i(t)$ in the network in Fig. P8.31.

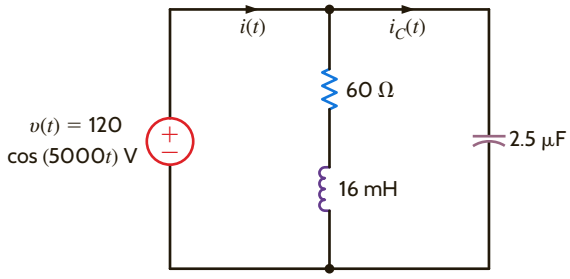

Figure P8.31

8.32 If $v_s(t) = 20 \cos 5t$ volts, find $v_o(t)$ in the network in Fig. P8.32.

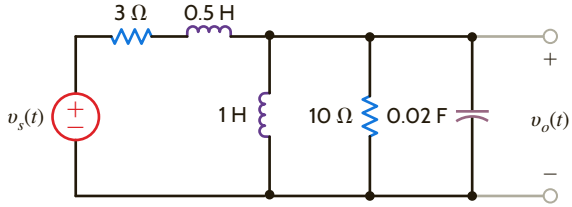

Figure P8.32

8.33 Find $v_o(t)$ in the circuit in Fig. P8.33.

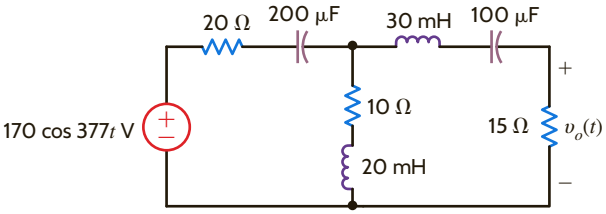

Figure P8.33

8.34 Find $v_o(t)$ in the network in Fig. P8.34.

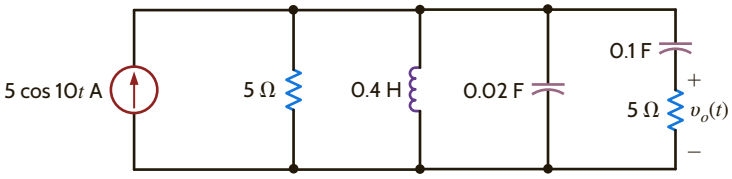

Figure P8.34

8.35 Find $i_o(t)$ in the circuit in Fig. P8.35 if $v(t) = 50 \cos 100t$ V.

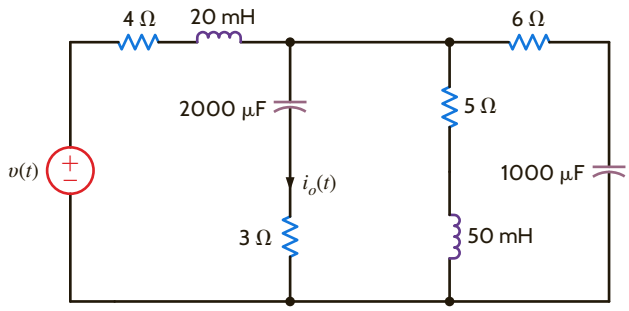

Figure P8.35

8.36 Find $v_o(t)$ and $i_o(t)$ in the network in Fig. P8.36.

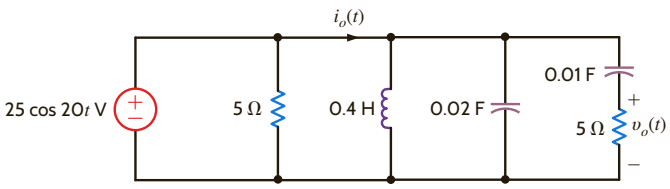

Figure P8.36

8.37 Calculate $v_o(t)$ in Fig. P8.37.

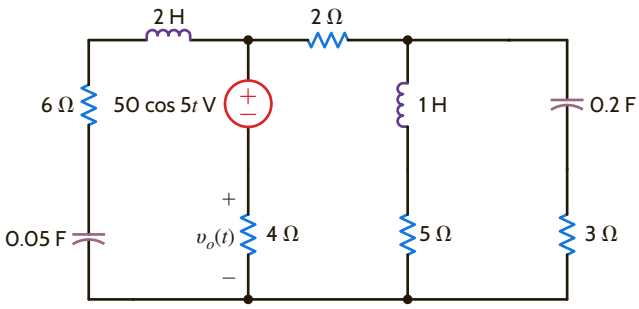

Figure P8.37

8.38 Find $i_2(t)$ in the circuit in Fig. P8.38.

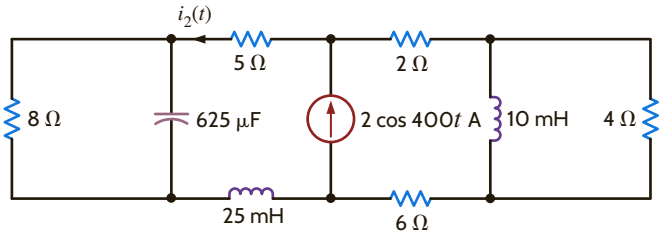

Figure P8.38

8.39 Find the voltage $\mathbf{V}_o$ shown in Fig. P8.39.

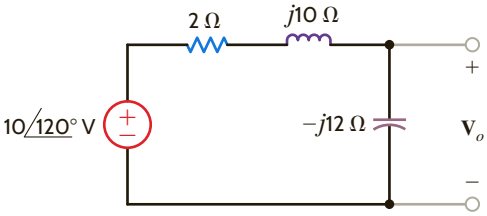

Figure P8.39

8.40 Find the frequency-domain current $\mathbf{I}$ shown in Fig. P8.40.

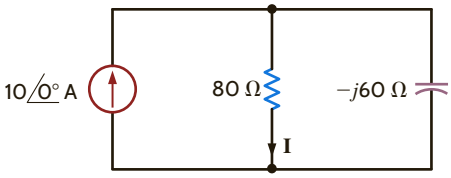

Figure P8.40

8.41 Find the frequency-domain voltage $\mathbf{V}_o$ shown in Fig. P8.41.

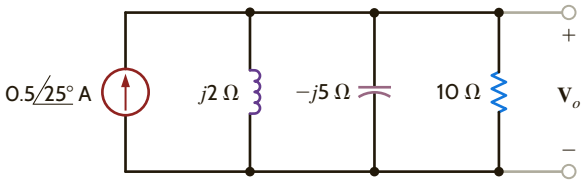

Figure P8.41

8.42 Find the voltage $\mathbf{V}$ shown in Fig. P8.42.

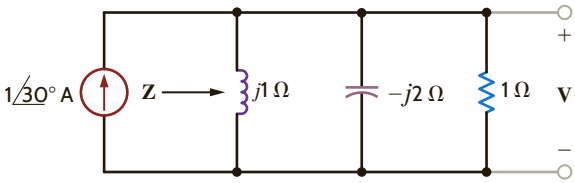

Figure P8.42

8.43 Find the frequency-domain current $\mathbf{I}$ shown in Fig. P8.43.

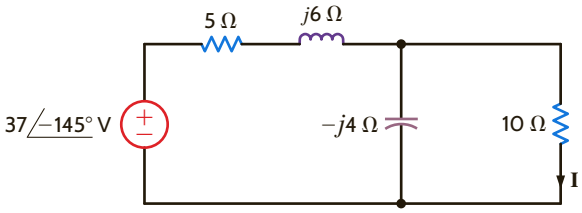

Figure P8.43

8.44 Find $v_x(t)$ in the circuit in Fig. P8.44.

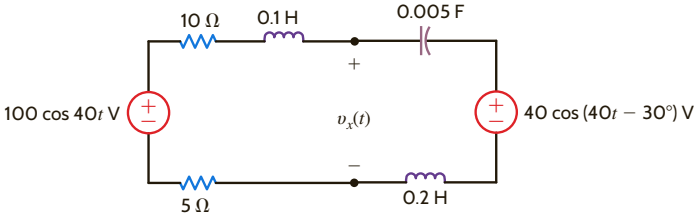

Figure P8.44

8.45 Find $v_o(t)$ in the network in Fig. P8.45.

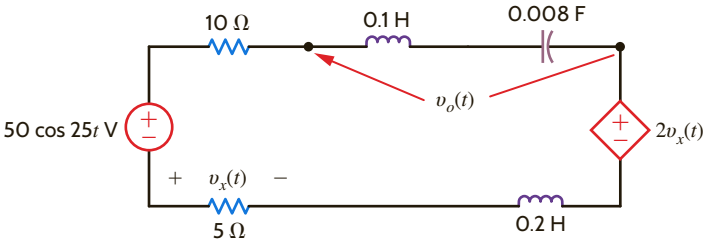

Figure P8.45

8.46 Find $v_1(t)$ and $v_2(t)$ in the circuit in Fig. P8.46.

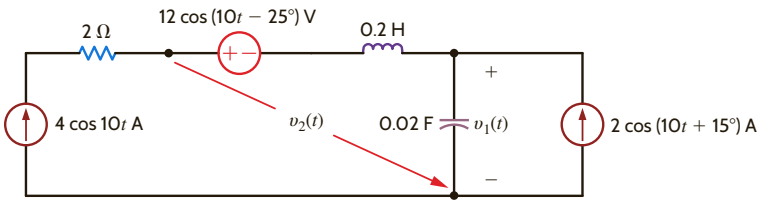

Figure P8.46

8.47 Find the voltage **V** shown in Fig. P8.47.

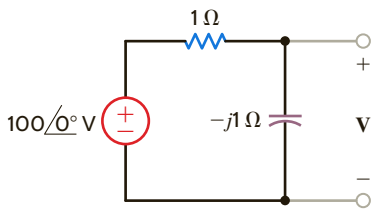

Figure P8.47

8.48 Find the voltage $\mathbf{V}_o$ shown in Fig. P8.48.

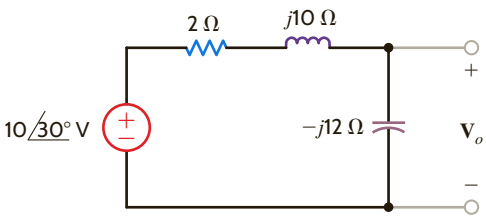

Figure P8.48

8.49 Find the frequency-domain voltage $\mathbf{V}_o$ shown in Fig. P8.49.

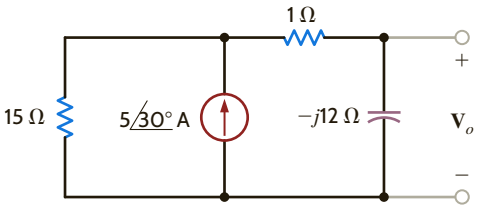

Figure P8.49

8.50 Find $\mathbf{V}_o$ in the network in Fig. P8.50.

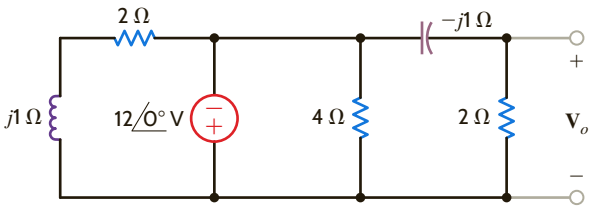

Figure P8.50

8.51 Determine $\mathbf{I}_o$ in the network shown in Fig. P8.51 if $\mathbf{V}_S = 12\underline{/0°}$ V.

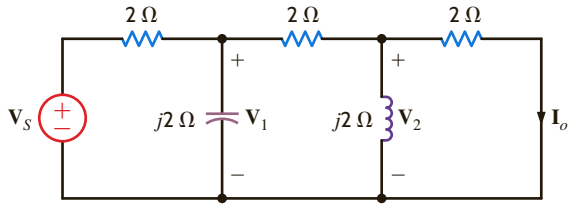

Figure P8.51

8.52 Given the network in Fig. P8.52, determine the value of $\mathbf{V}_o$ if $\mathbf{V}_S = 24\underline{/0°}$ V.

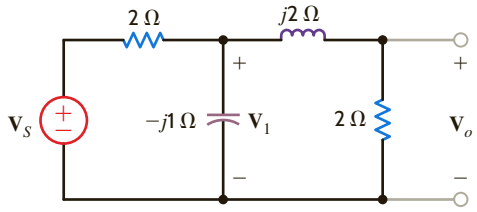

Figure P8.52

8.53 Find $\mathbf{V}_S$ in the network in Fig. P8.53 if $\mathbf{V}_1 = 4\underline{/0°}$ V.

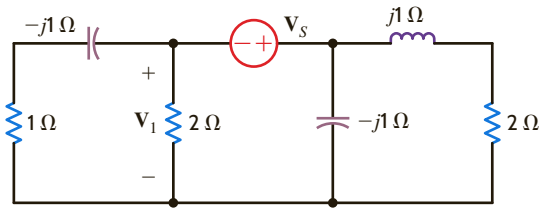

Figure P8.53

8.54 If $\mathbf{V}_1 = 4\underline{/0°}$ V, find $\mathbf{I}_o$ in Fig. P8.54.

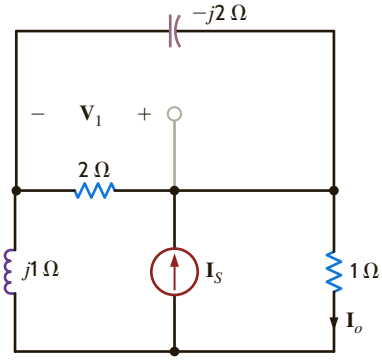

Figure P8.54

8.55 In the network in Fig. P8.55, $\mathbf{I}_o = 4\underline{/0°}$ A. Find $\mathbf{I}_x$.

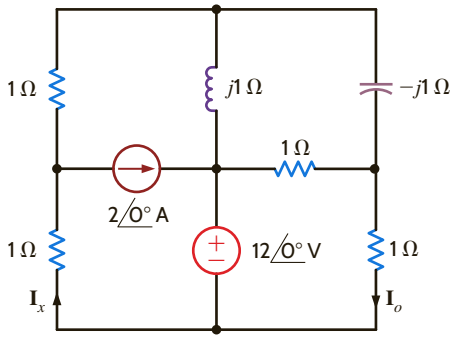

Figure P8.55

8.56 If $\mathbf{I}_o = 4\angle 0°$ A in the circuit in Fig. P8.56, find $\mathbf{I}_x$.

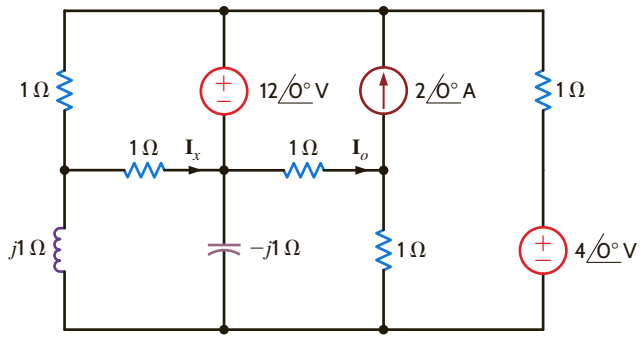

Figure P8.56

8.57 If $\mathbf{I}_o = 4\angle 0°$ A in the network in Fig. P8.57, find $\mathbf{I}_x$.

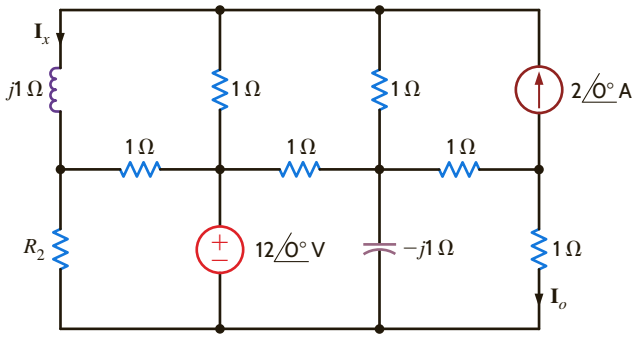

Figure P8.57

8.58 In the network in Fig. P8.58, $\mathbf{V}_o$ is known to be $4\angle 45°$ V. Find $\mathbf{Z}$.

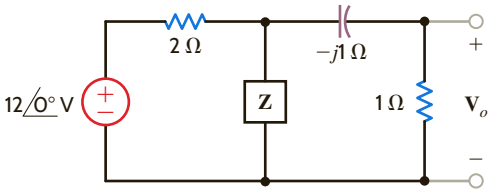

Figure P8.58

8.59 In the network in Fig. P8.59, $\mathbf{V}_1 = 5\angle -120°$ V. Find $\mathbf{Z}$.

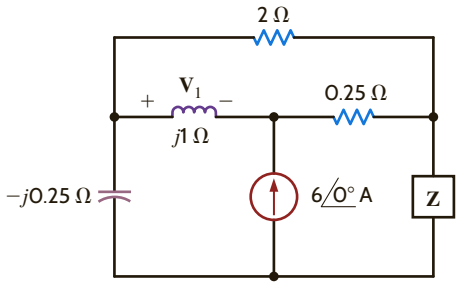

Figure P8.59

8.60 Find $\mathbf{V}_o$ in the circuit in Fig. P8.60.

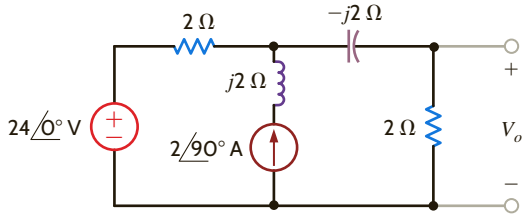

Figure P8.60

8.61 Find $\mathbf{V}_o$ in the network in Fig. P8.61.

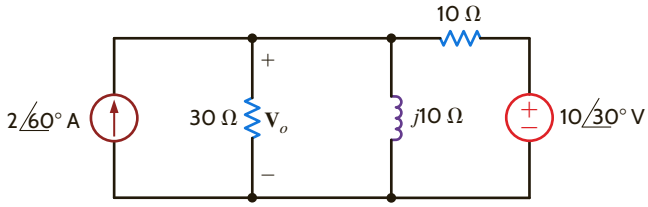

Figure P8.61

8.62 Using nodal analysis, find $\mathbf{I}_o$ in the circuit in Fig. P8.62.

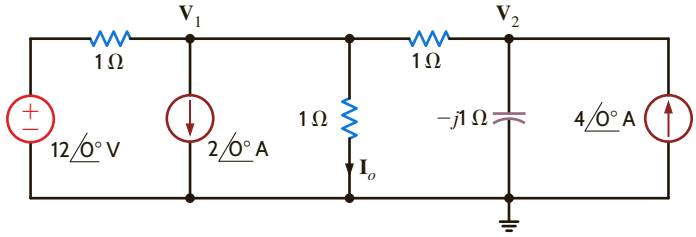

Figure P8.62

8.63 Use nodal analysis to find $\mathbf{I}_o$ in the circuit in Fig. P8.63.

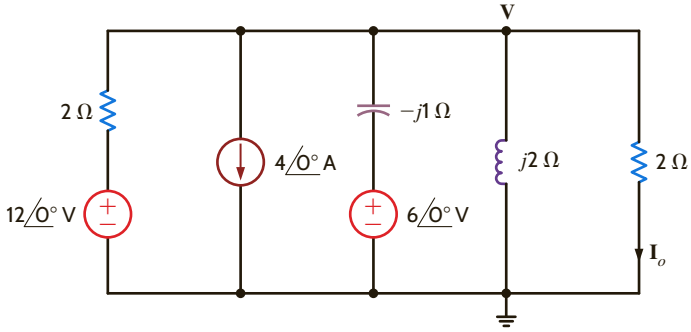

Figure P8.63

8.64 Find $\mathbf{V}_o$ in the network in Fig. P8.64 using nodal analysis.

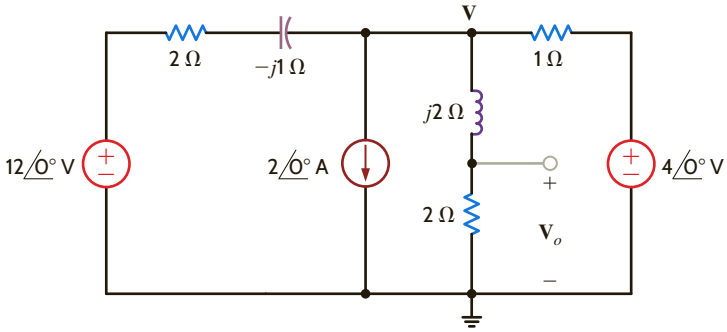

Figure P8.64

8.65 Use the supernode technique to find $\mathbf{I}_o$ in the circuit in Fig. P8.65.

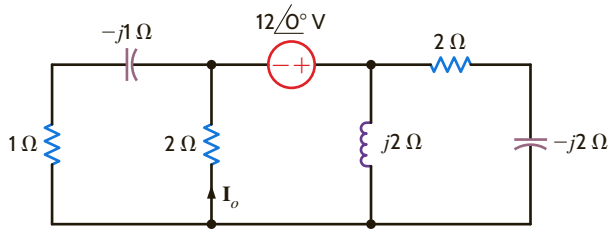

Figure P8.65

8.66 Find $\mathbf{I}_1$ and $\mathbf{V}_o$ in the network in Fig. P8.66.

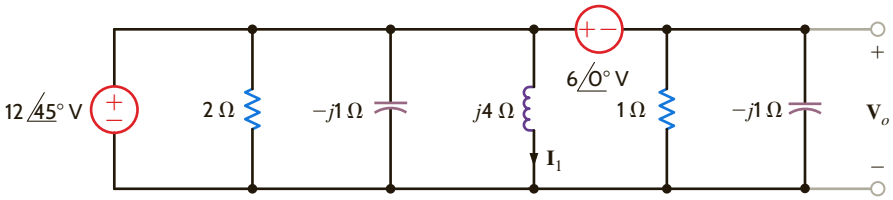

Figure P8.66

8.67 Use nodal analysis to find $\mathbf{V}_o$ in the network in Fig. P8.67.

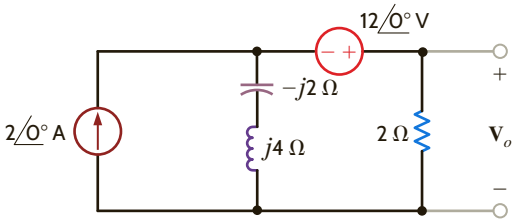

Figure P8.67

8.68 Use nodal analysis to find $\mathbf{I}_o$ in the circuit in Fig. P8.68.

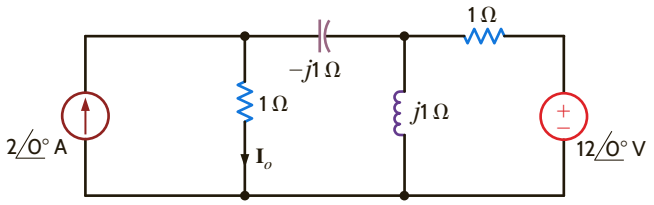

Figure P8.68

8.69 Use nodal analysis to find $\mathbf{V}_o$ in the network in Fig. P8.69.

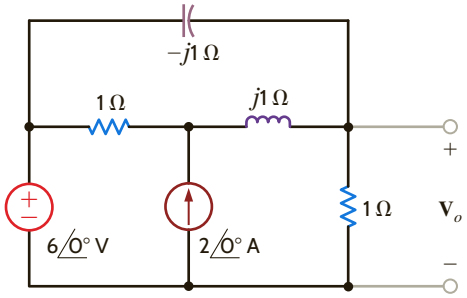

Figure P8.69

8.70 Use nodal analysis to find $\mathbf{V}_o$ in the circuit in Fig. P8.70.

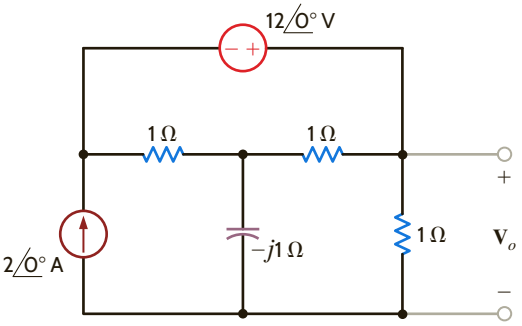

Figure P8.70

8.71 Use nodal analysis to find $\mathbf{V}_o$ in the network in Fig. P8.71.

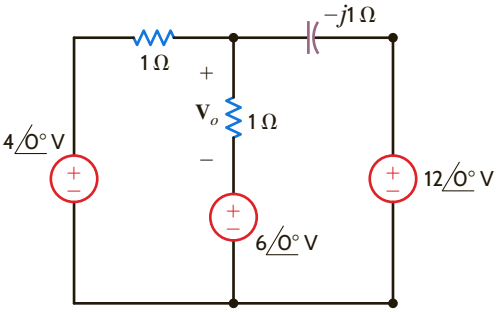

Figure P8.71

8.72 Use nodal analysis to find $\mathbf{I}_o$ in the network in Fig. P8.72.

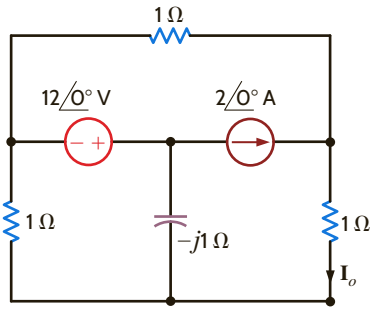

Figure P8.72

8.73 Use nodal analysis to find $\mathbf{V}_o$ in the circuit in Fig. P8.73.

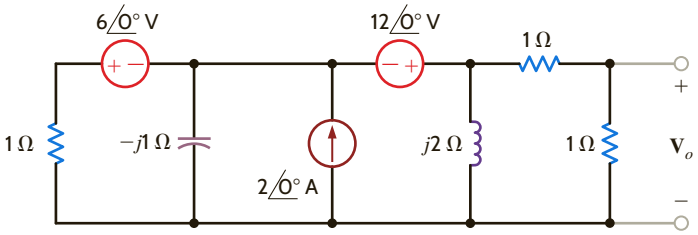

Figure P8.73

8.74 Find $\mathbf{I}_o$ in the circuit in Fig. P8.74 using nodal analysis.

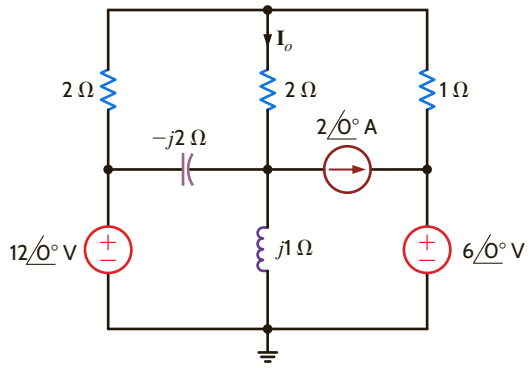

Figure P8.74

8.75 Use nodal analysis to find $\mathbf{I}_o$ in the circuit in Fig. P8.75.

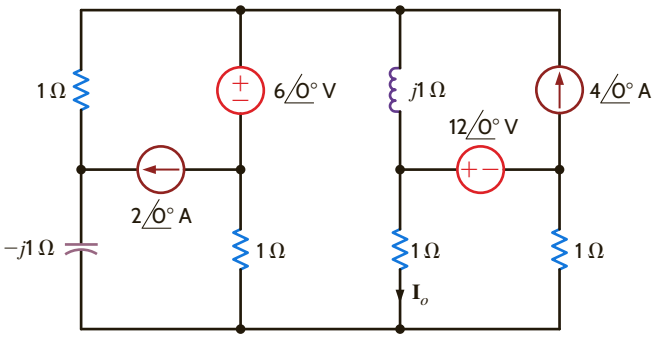

Figure P8.75

8.76 Use nodal analysis to find $\mathbf{V}_o$ in the network in Fig. P8.76.

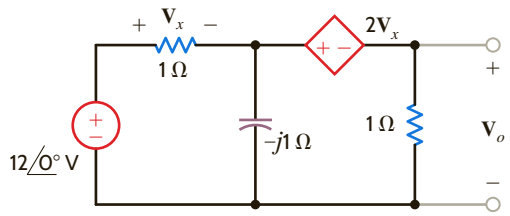

Figure P8.76

8.77 Use nodal analysis to find $\mathbf{V}_o$ in the network in Fig. P8.77.

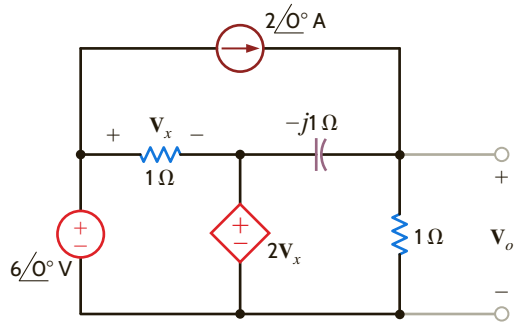

Figure P8.77

8.78 Use nodal analysis to find $\mathbf{I}_o$ in the network in Fig. P8.78.

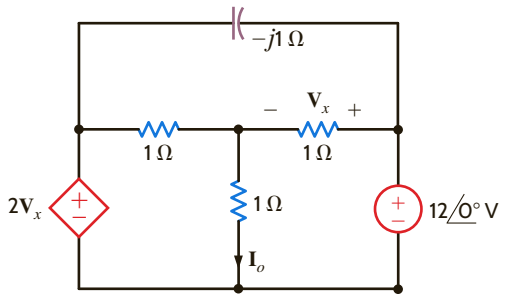

Figure P8.78

8.79 Use nodal analysis to find $\mathbf{V}_o$ in the network in Fig. P8.79.

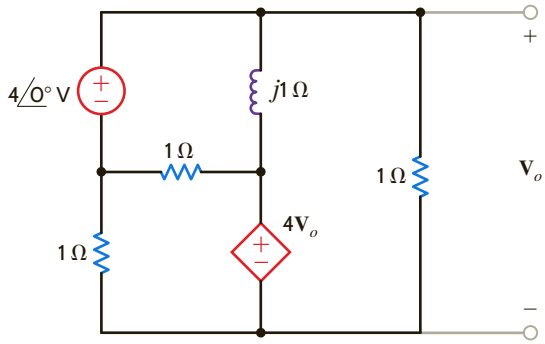

Figure P8.79

8.80 Use nodal analysis to find $\mathbf{I}_o$ in the network in Fig. P8.80.

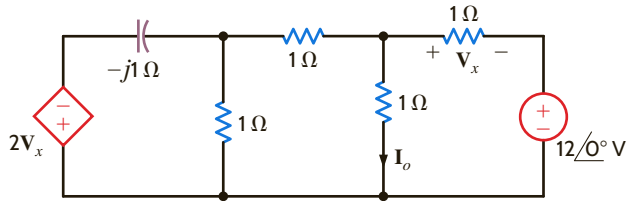

Figure P8.80

8.81 Use nodal analysis to find $\mathbf{V}_o$ in the circuit in Fig. P8.81.

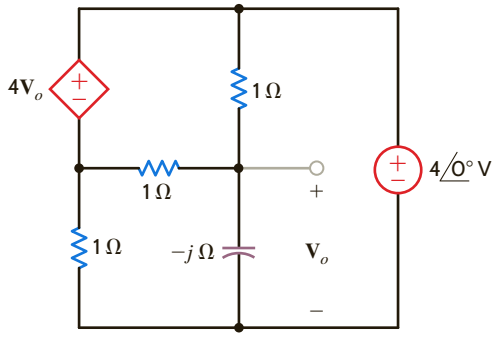

Figure P8.81

8.82 Use nodal analysis to find $\mathbf{V}_x$ in the circuit in Fig. P8.82.

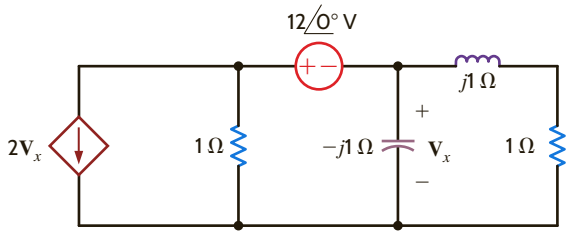

Figure P8.82

8.83 Find the voltage across the inductor in the circuit shown in Fig. P8.83 using nodal analysis.

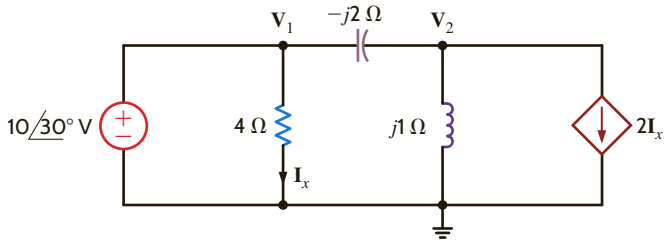

Figure P8.83

8.84 Use nodal analysis to find $\mathbf{V}_o$ in the circuit in Fig. P8.84.

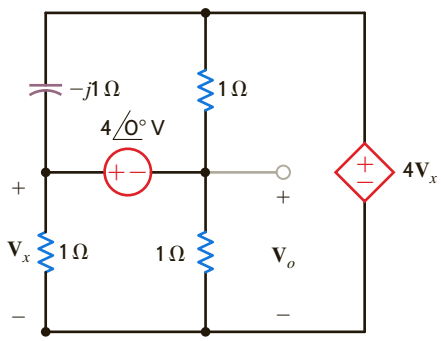

Figure P8.84

8.85 Use nodal analysis to find $\mathbf{V}_o$ in the network in Fig. P8.85.

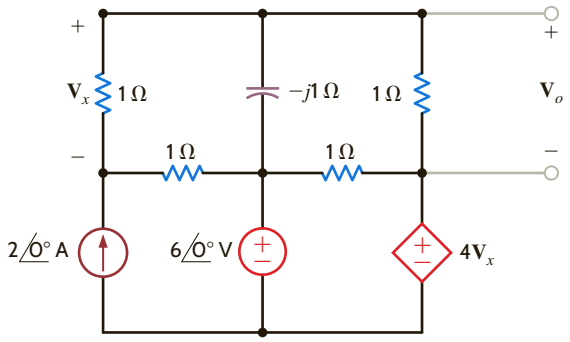

Figure P8.85

8.86 Use nodal analysis to find $\mathbf{V}_o$ in the circuit in Fig. P8.86.

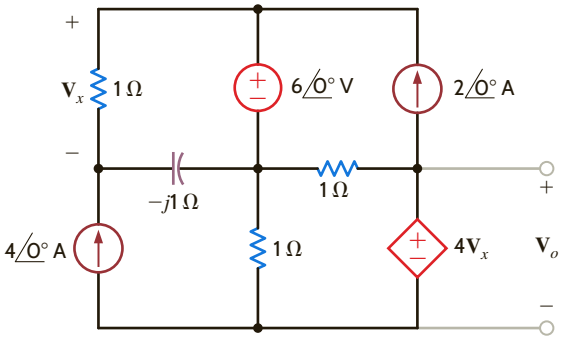

Figure P8.86

8.87 Use nodal analysis to find $\mathbf{V}_o$ in the circuit in Fig. P8.87.

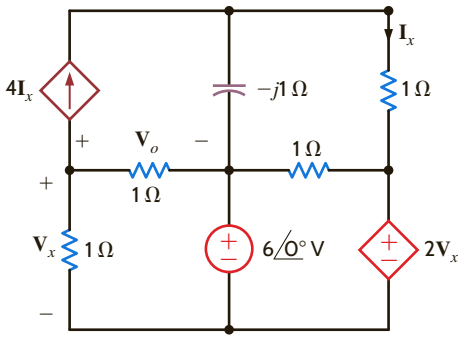

Figure P8.87

8.88 Use nodal analysis to find $\mathbf{I}_o$ in the circuit in Fig. P8.88.

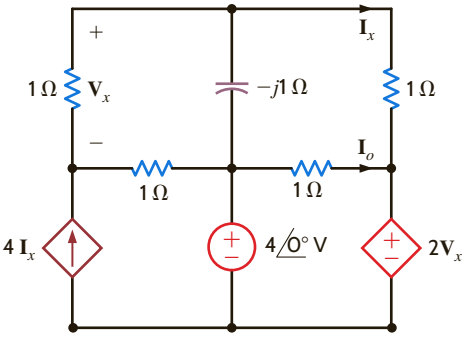

Figure P8.88

8.89 Use mesh analysis to find $\mathbf{V}_o$ in the circuit shown in Fig. P8.89.

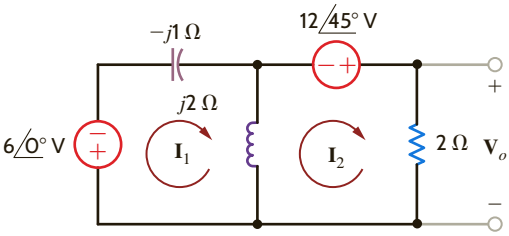

Figure P8.89

8.90 Solve problem 8.67 using loop analysis.

8.91 Solve problem 8.68 using loop analysis.

8.92 Solve problem 8.69 using loop analysis.

8.93 Find $\mathbf{V}_o$ in the network in Fig. P8.93 using loop analysis.

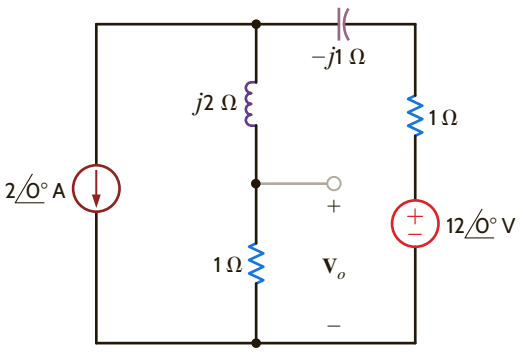

Figure P8.93

8.94 Find $\mathbf{V}_o$ in the network in Fig. P8.94 using loop analysis.

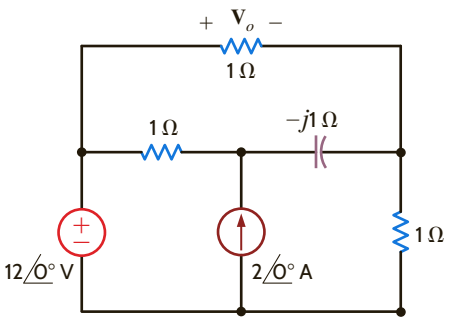

Figure P8.94

8.95 Find $\mathbf{I}_o$ in the network in Fig. P8.95 using loop analysis.

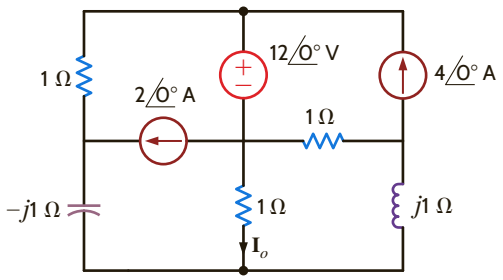

Figure P8.95

8.96 Find $\mathbf{V}_o$ in the circuit in Fig. P8.96 using mesh analysis.

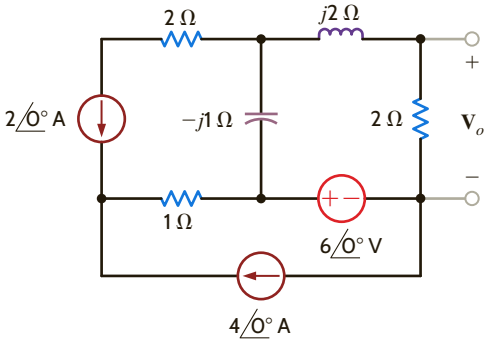

Figure P8.96

8.97 Find $\mathbf{V}_o$ in the network in Fig. P8.97.

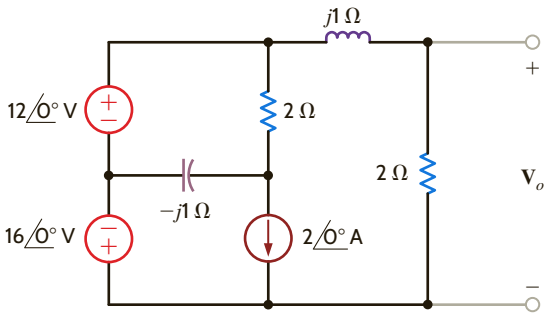

Figure P8.97

8.98 Determine $\mathbf{V}_o$ in the circuit in Fig. P8.98.

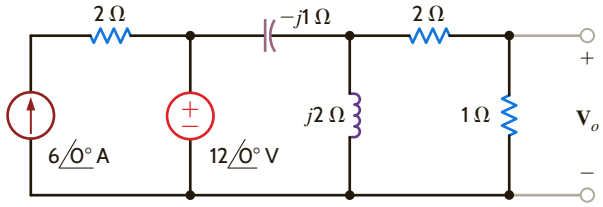

Figure P8.98

8.99 Use mesh analysis to find $\mathbf{V}_o$ in the circuit shown in Fig. P8.99.

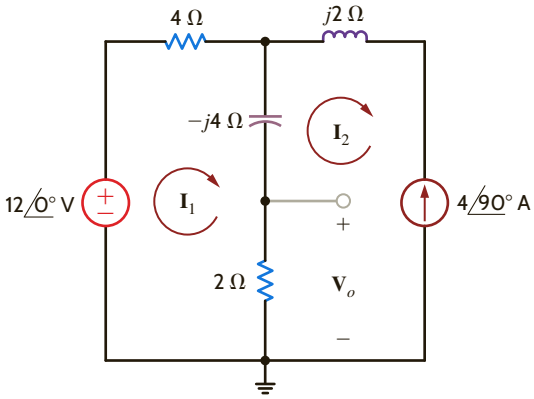

Figure P8.99

8.100 Using loop analysis, find $\mathbf{I}_o$ in the network in Fig. P8.100.

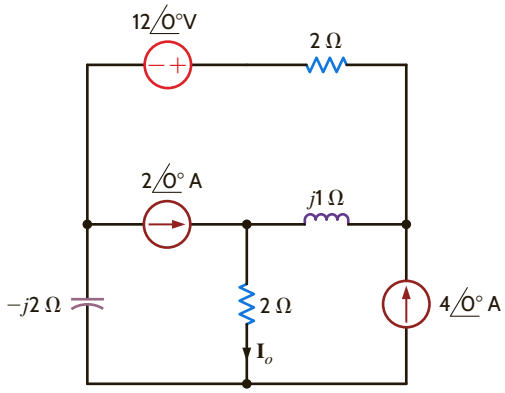

Figure P8.100

8.101 Use mesh analysis to find $\mathbf{V}_o$ in the circuit in Fig. P8.101.

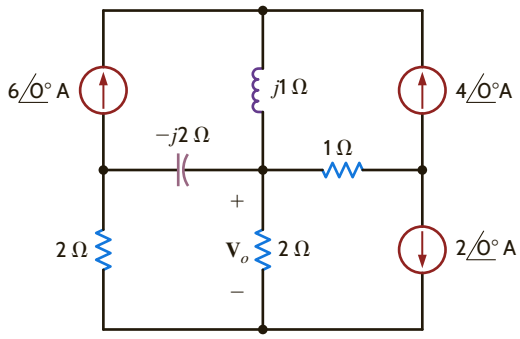

Figure P8.101

8.102 Use loop analysis to find $\mathbf{I}_o$ in the network in Fig. P8.102.

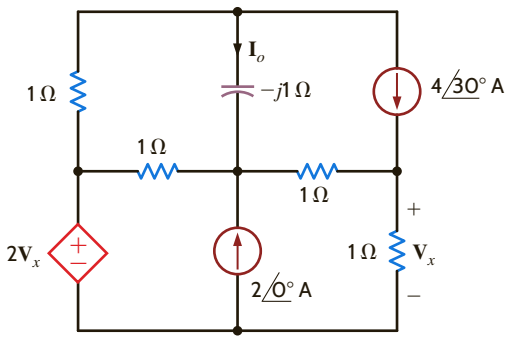

Figure P8.102

8.103 Find $\mathbf{V}_o$ in the network in Fig. P8.103.

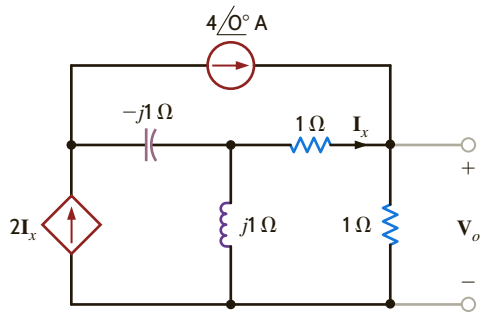

Figure P8.103

8.104 Use loop analysis to find $\mathbf{V}_o$ in the circuit in Fig. P8.104.

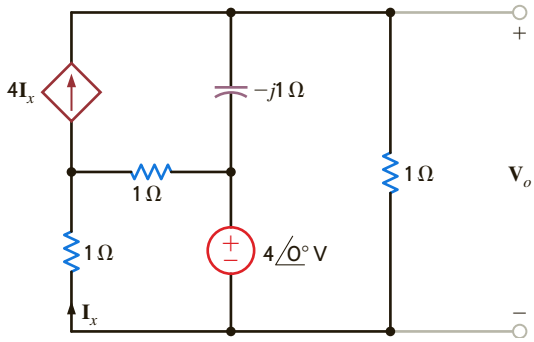

Figure P8.104

8.105 Use loop analysis to find $\mathbf{V}_o$ in the network in Fig. P8.105.

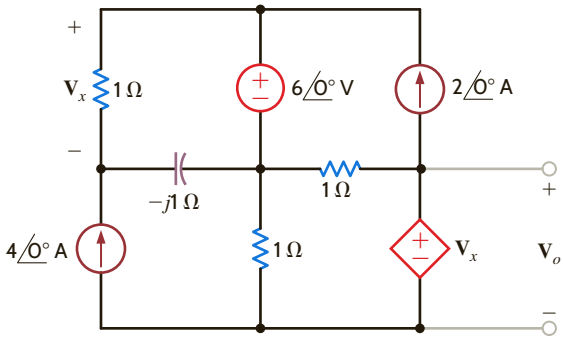

Figure P8.105

8.106 Use superposition to find $\mathbf{V}_o$ in the network in Fig. P8.106.

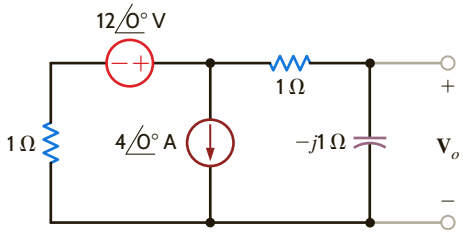

Figure P8.106

8.107 Solve problem 8.67 using superposition.

8.108 Solve problem 8.68 using superposition.

8.109 Solve problem 8.69 using superposition.

8.110 Use superposition to determine $\mathbf{V}_o$ in the circuit in Fig. P8.110.

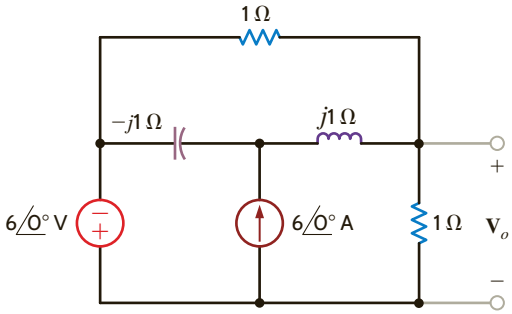

Figure P8.110

8.111 Using superposition, find $\mathbf{V}_o$ in the circuit in Fig. P8.111.

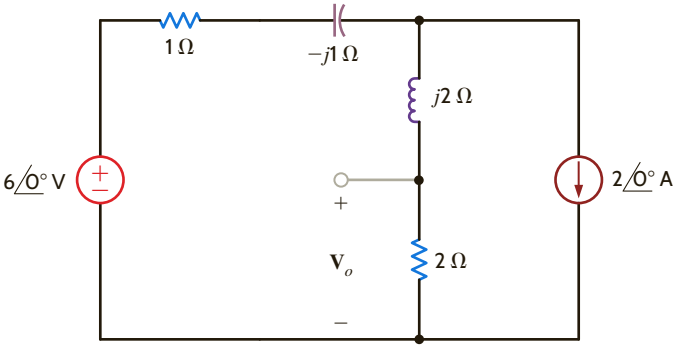

Figure P8.111

8.112 Find $\mathbf{V}_o$ in the network in Fig. P8.112 using superposition.

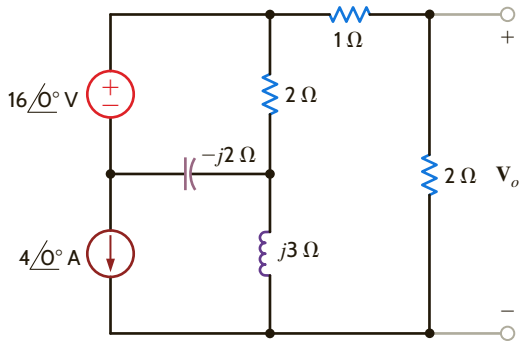

Figure P8.112

8.113 Find $\mathbf{V}_o$ in the network in Fig. P8.113 using superposition.

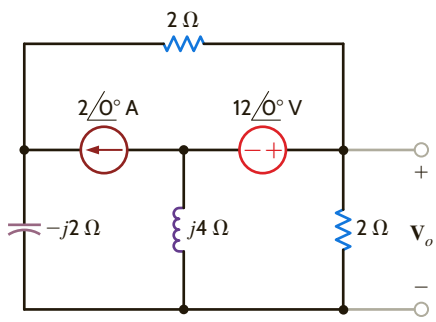

Figure P8.113

8.114 Use superposition to find $\mathbf{V}_o$ in the circuit in Fig. P8.114.

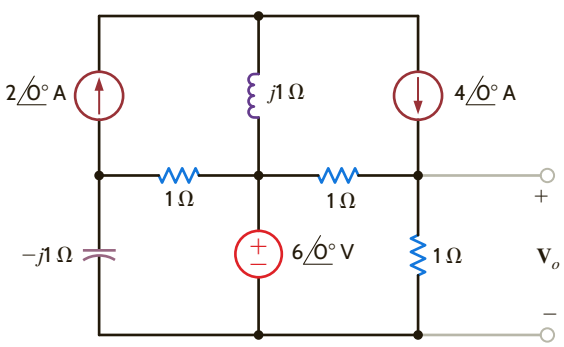

Figure P8.114

8.115 Use superposition to find $\mathbf{V}_o$ in the network in Fig. P8.115.

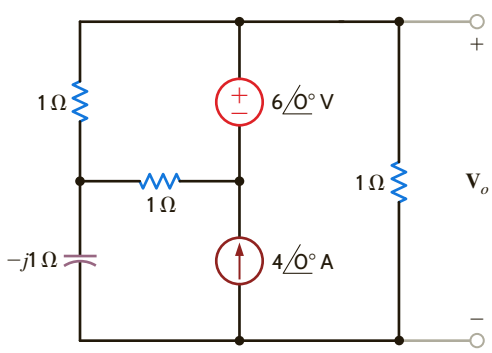

Figure P8.115

8.116 Solve problem 8.68 using source exchange.

8.117 Use source exchange to find the current $\mathbf{I}_o$ in the network in Fig. P8.117.

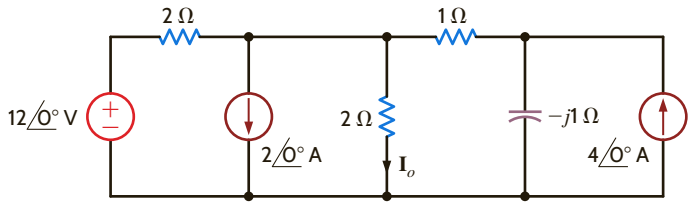

Figure P8.117

8.118 Use source exchange to determine $\mathbf{V}_o$ in the network in Fig. P8.118.

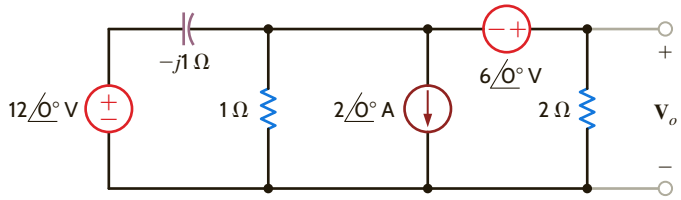

Figure P8.118

8.119 Use source transformation to find $\mathbf{V}_o$ in the circuit in Fig. P8.119.

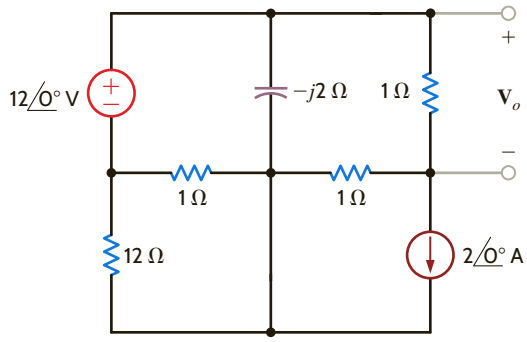

Figure P8.119

8.120 Use source transformation to find $\mathbf{V}_o$ in the circuit in Fig. P8.120.

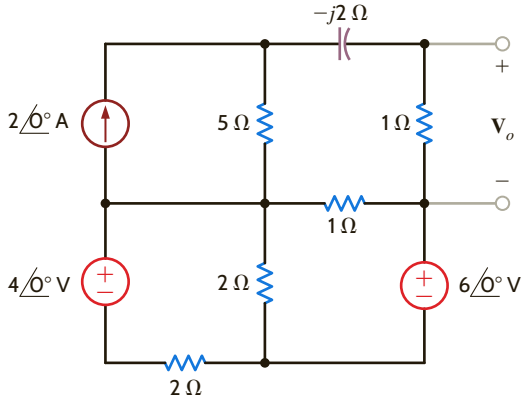

Figure P8.120

8.21 Use source transformation to find $\mathbf{I}_o$ in the circuit in Fig. P8.121.

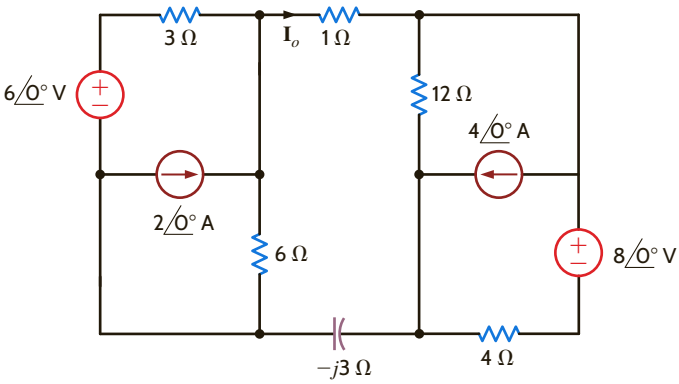

Figure P8.121

8.122 Solve problem 8.67 using Thévenin's theorem.

8.123 Solve problem 8.68 using Thévenin's theorem.

8.124 Solve problem 8.69 using Thévenin's theorem.

8.125 Use Thevenin's theorem to find $\mathbf{V}_o$ in the circuit in Fig. P8.125.

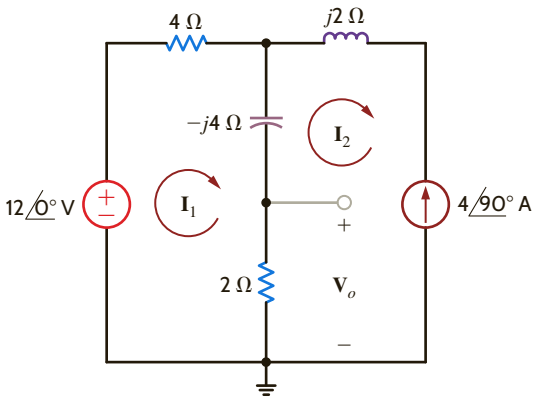

Figure P8.125

8.126 Apply Thévenin's theorem twice to find $\mathbf{V}_o$ in the circuit in Fig. P8.126.

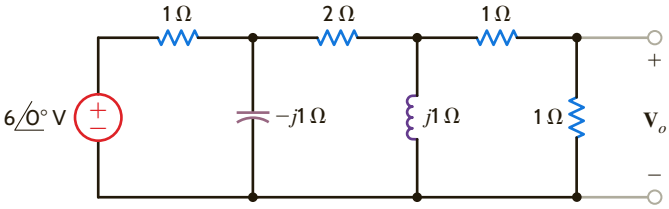

Figure P8.126

8.127 Use Thévenin's theorem to find $\mathbf{V}_o$ in the network in Fig. P8.127.

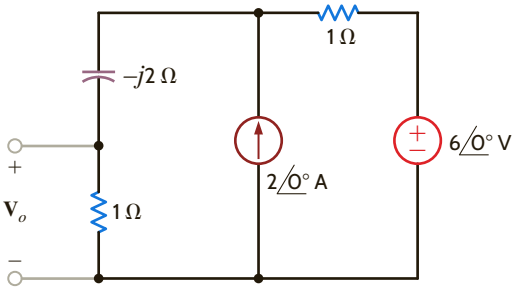

Figure P8.127

8.128 Use Thévenin's theorem to find $\mathbf{I}_o$ in the network in Fig. P8.128.

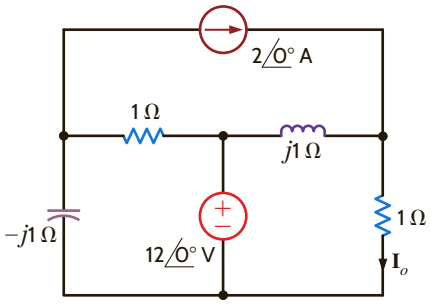

Figure P8.128

8.129 Use Thévenin's theorem to find the voltage across the 2-Ω resistor in the network in Fig. P8.129.

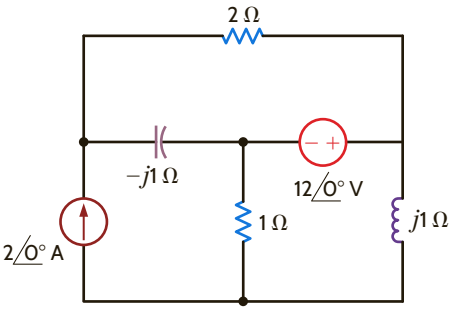

Figure P8.129

8.130 Use Thévenin's theorem to find $\mathbf{I}_o$ in the network in Fig. P8.130.

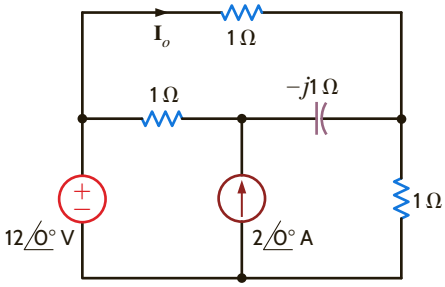

Figure P8.130

8.131 Use Thévenin's theorem to find $\mathbf{V}_o$ in the network in Fig. P8.131.

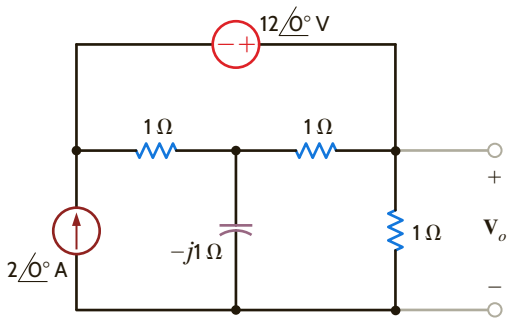

Figure P8.131

8.132 Use Thévenin's theorem to find $\mathbf{I}_o$ in the network in Fig. P8.132.

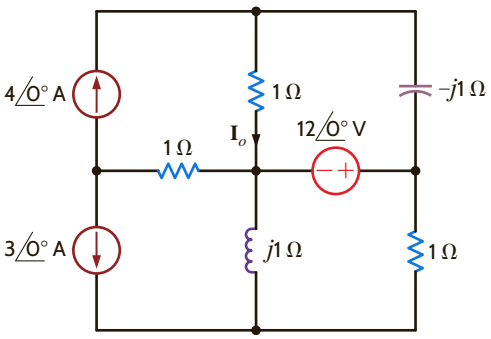

Figure P8.132

8.133 Use Thévenin's theorem to find $\mathbf{V}_o$ in the network in Fig. P8.133.

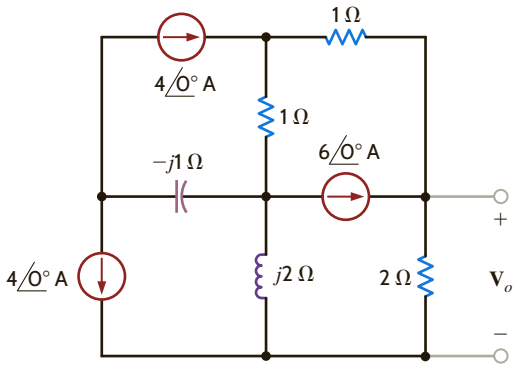

Figure P8.133

8.134 Use Thévenin's theorem to determine $\mathbf{I}_o$ in the circuit in Fig. P8.134.

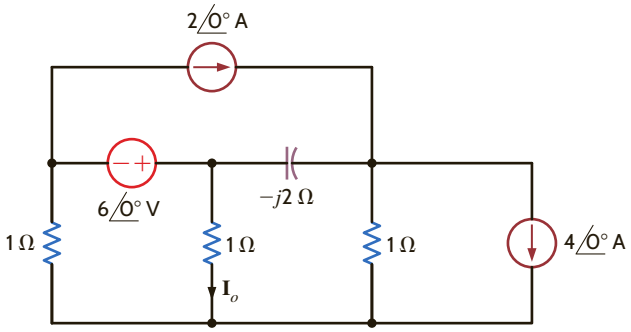

Figure P8.134

8.135 Use Thévenin's theorem to find $\mathbf{V}_o$ in the network in Fig. P8.135.

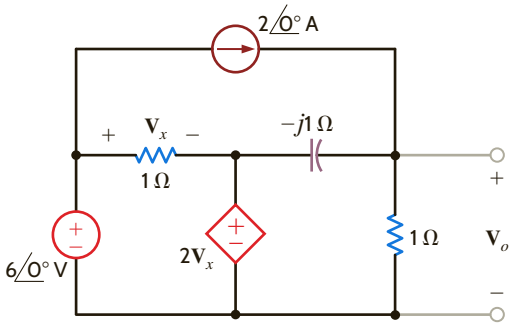

Figure P8.135

8.136 Use Thévenin's theorem to find $\mathbf{I}_o$ in the network in Fig. P8.136.

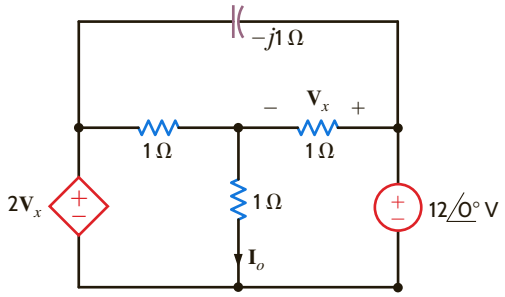

Figure P8.136

8.137 Find $\mathbf{V}_o$ in the network in Fig. P8.137 using Thévenin's theorem.

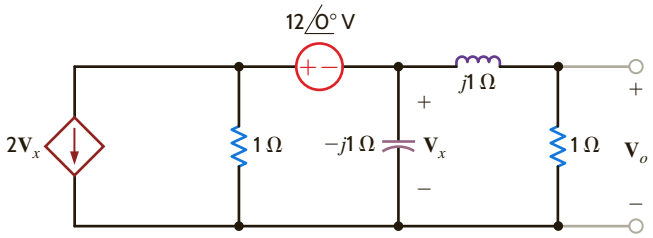

Figure P8.137

8.138 Find the Thévenin's equivalent for the network in Fig. P8.138 at terminals *A*–*B*.

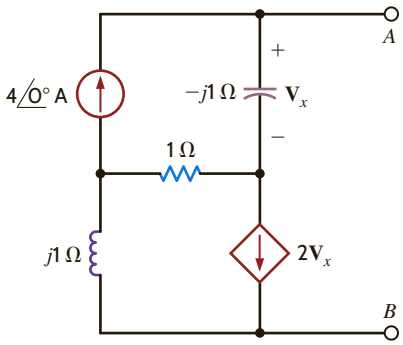

Figure P8.138

8.139 Given the network in Fig. P8.139, find the Thévenin's equivalent of the network at terminals *A–B*.

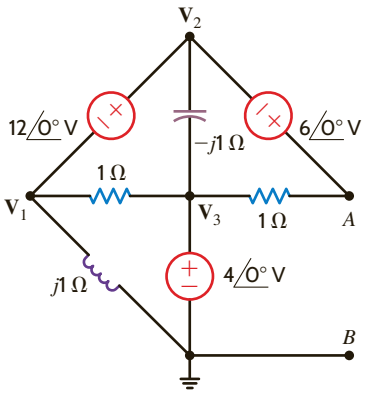

Figure P8.139

8.140 Use Thévenin's theorem to determine $\mathbf{I}_o$ in the network in Fig. P8.140.

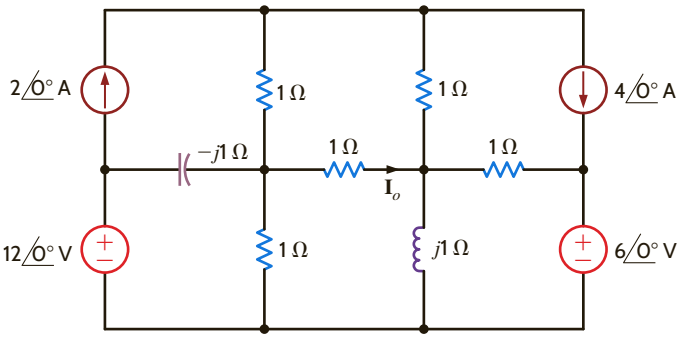

Figure P8.140

8.141 Use Thévenin's theorem to find $\mathbf{I}_o$ in the network in Fig. P8.141.

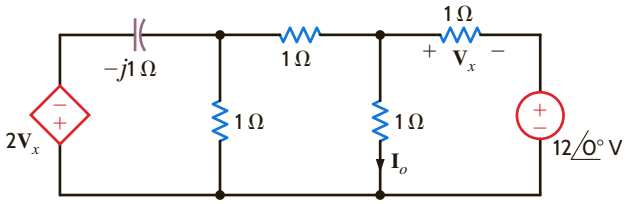

Figure P8.141

8.142 Solve problem 8.68 using Norton's theorem.

8.143 Solve problem 8.69 using Norton's theorem.

8.144 Find $\mathbf{V}_x$ in the circuit in Fig. P8.144 using Norton's theorem.

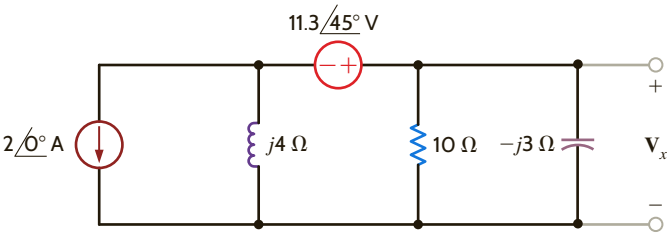

Figure P8.144

8.145 Find $\mathbf{I}_o$ in the network in Fig. P8.145 using Norton's theorem.

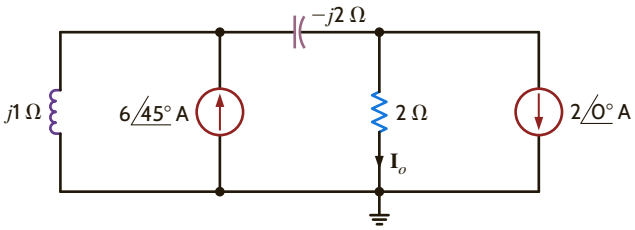

Figure P8.145

8.146 Use Norton's theorem to find $\mathbf{V}_o$ in the network in Fig. P8.146.

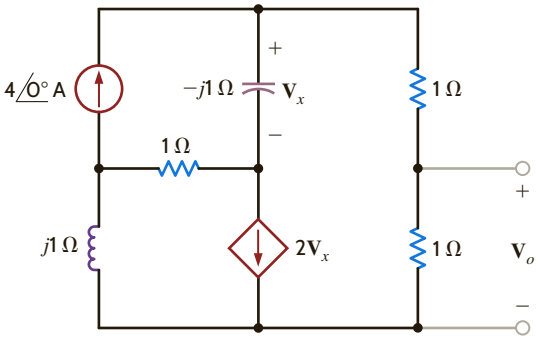

Figure P8.146

8.147 Find $\mathbf{V}_o$ using Norton's theorem for the circuit in Fig. P8.147.

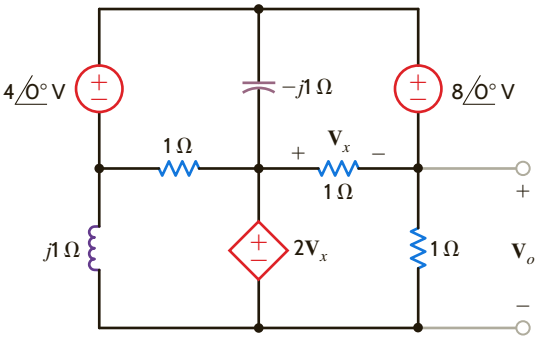

Figure P8.147

8.148 Use Norton's theorem to find $\mathbf{V}_o$ in the circuit in Fig. P8.148.

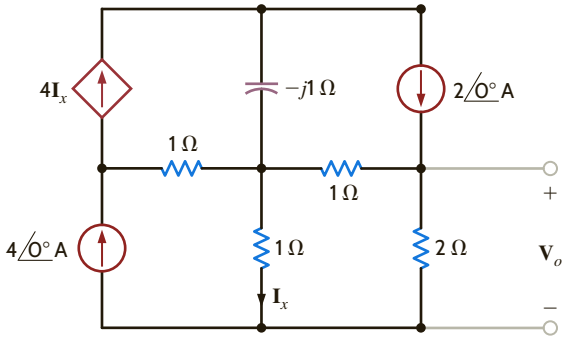

Figure P8.148

8.149 Apply Norton's theorem to find $\mathbf{V}_o$ in the network in Fig. P8.149.

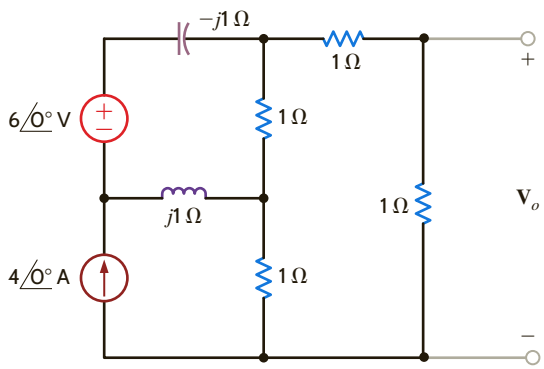

Figure P8.149

8.150 Find $\mathbf{V}_o$ in the circuit in Fig. P8.150.

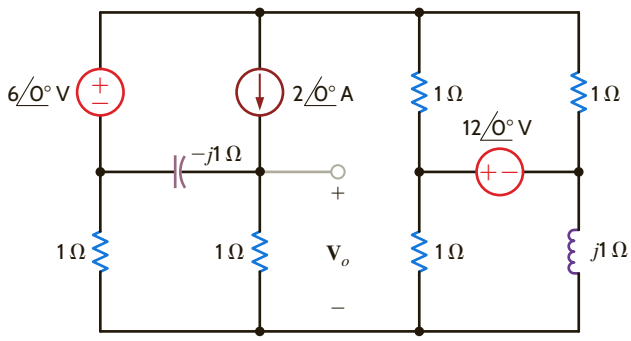

Figure P8.150

8.151 Find the node voltages in the network in Fig. P8.151.

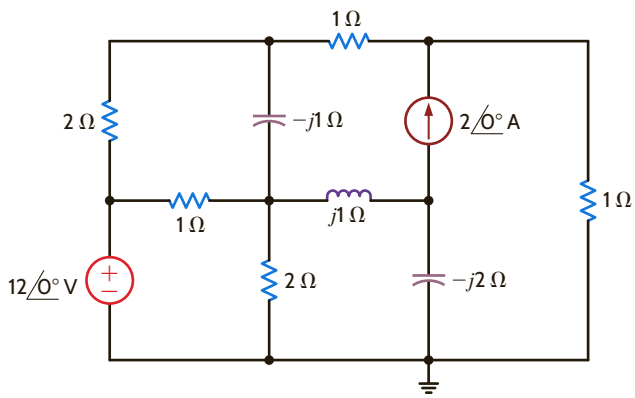

Figure P8.151

8.152 Determine $\mathbf{V}_o$ in the network in Fig. P8.152.

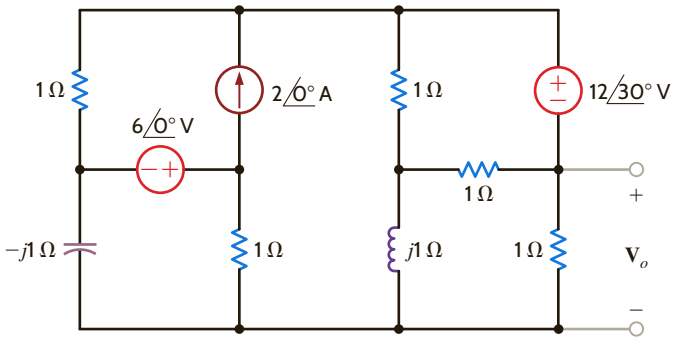

Figure P8.152

8.153 Find $\mathbf{I}_o$ in the network in Fig. P8.153.

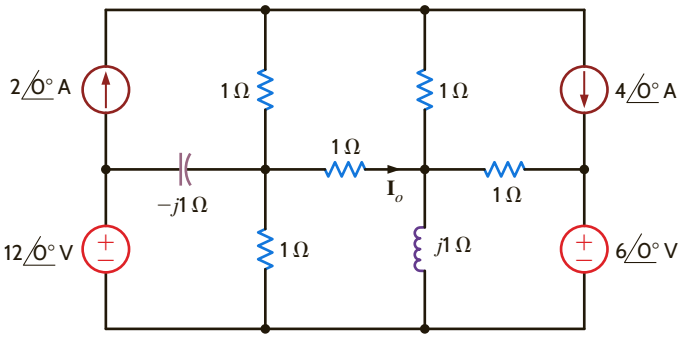

Figure P8.153

8.154 Use both nodal analysis and loop analysis to find $\mathbf{I}_o$ in the network in Fig. P8.154.

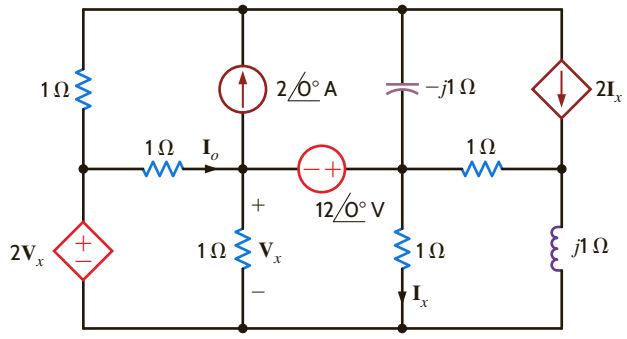

Figure P8.154

8.155 Find $\mathbf{I}_o$ in the network in Fig. P8.155.

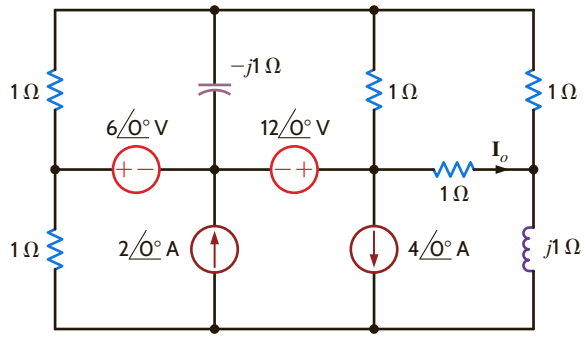

Figure P8.155

8.156 Find $\mathbf{I}_o$ in the network in Fig. P8.156.

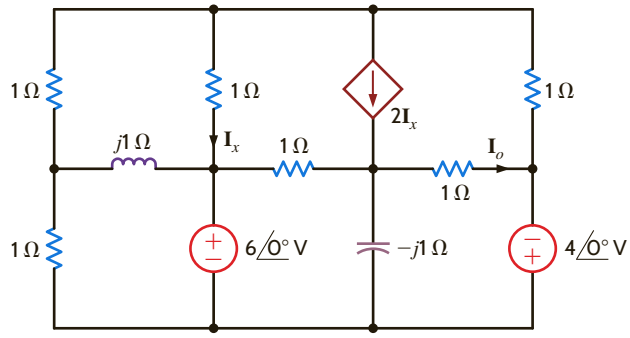

Figure P8.156

8.157 Determine $\mathbf{I}_o$ in the network in Fig. P8.157.

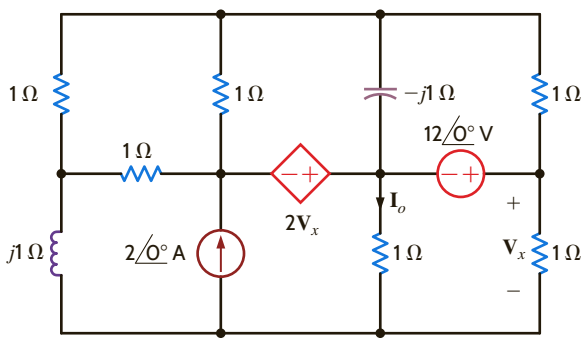

Figure P8.157

8.158 Find $\mathbf{I}_o$ in the circuit in Fig. P8.158.

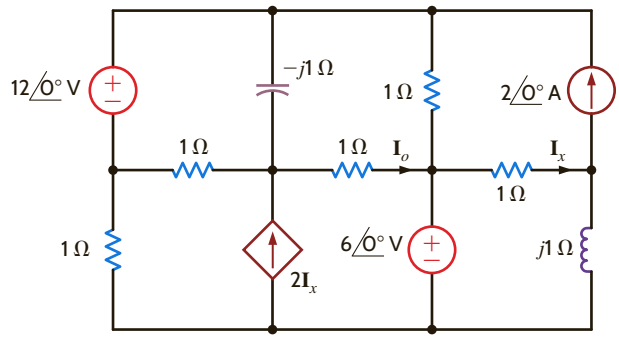

Figure P8.158

TYPICAL PROBLEMS FOUND ON THE FE EXAM

8PFE-1 Find $\mathbf{V}_o$ in the network in Fig. 8PFE-1.

a. 4.62∠30.4° V **c.** 3.02∠24.3° V

b. 7.16∠−26.6° V **d.** 5.06∠−71.6° V

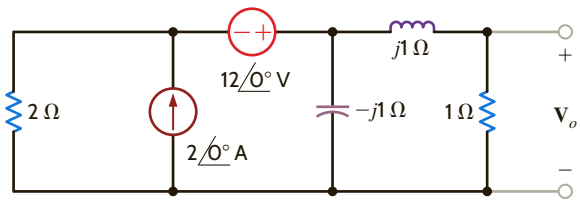

Figure 8PFE-1

8PFE-2 Find $\mathbf{V}_o$ in the circuit in Fig. 8PFE-2.

a. 25.4∠10.25° V **c.** 30.8∠8.97° V

b. 20.1∠4.63° V **d.** 18.3∠12.32° V

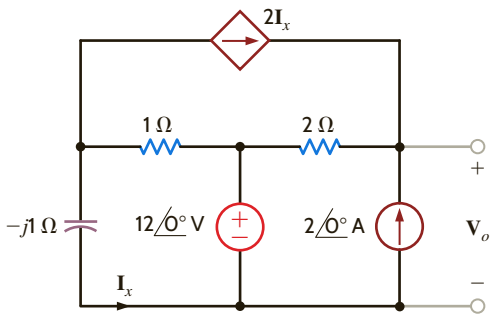

Figure 8PFE-2

8PFE-3 Find $\mathbf{V}_o$ in the network in Fig. 8PFE-3.

a. 8.24∠−30.96° V **c.** 16.96∠45° V

b. 2.06∠20.84° V **d.** 10.42∠30° V

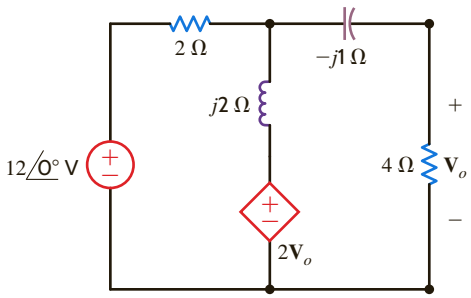

Figure 8PFE-3

8PFE-4 Determine the midband (where the coupling capacitors can be ignored) gain of the single-stage transistor amplifier shown in Fig. 8PFE-4.

a. 110.25 **c.** 26.67

b. −133.33 **d.** −95.75

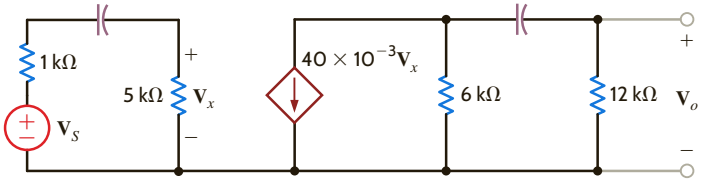

Figure 8PFE-4

8PFE-5 What is the current $\mathbf{I}_o$ in the circuit in Fig. 8PFE-5?

a. 6.32∠30.31° A **c.** 1.48∠32.92° A

b. 2.75∠21.43° A **d.** 5.23∠40.15° A

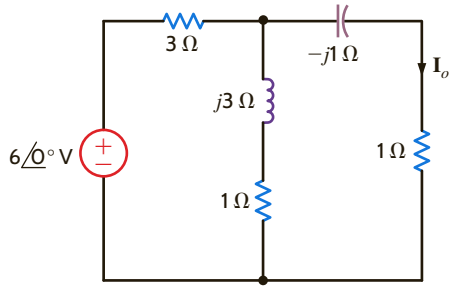

Figure 8PFE-5

Chapter Nine

THE LEARNING GOALS FOR THIS CHAPTER ARE THAT STUDENTS SHOULD BE ABLE TO:

- Analyze a circuit to determine the instantaneous and average power in ac circuits.
- Calculate the maximum average power transfer for a load in an ac circuit.
- Calculate the effective or rms value for a periodic waveform and, visa versa, calculate the magnitude of a periodic waveform from its rms value.
- Compute the real power, reactive power, complex power, and power factor in ac circuits.
- Redesign a circuit to correct the power factor in ac circuits.
- Explain the importance of safety with energy storage devices and ac circuits and the consequences of unsafe practices when working with power.

STEADY-STATE POWER ANALYSIS

AN EXPERIMENT THAT HELPS STUDENTS DEVELOP AN UNDERSTANDING OF POWER IN AC CIRCUITS IS:

- Complex Power in AC Circuit: Compute the real, reactive, and complex power in a RLC network using the measurements for amplitude and phase and compare the results with analytical calculations.

BY APPLYING THEIR KNOWLEDGE OF POWER IN AC CIRCUITS, STUDENTS CAN DESIGN:

- An impedance matching circuit that is required to deliver the maximum power to a load.

9.1 Instantaneous Power

By employing the sign convention adopted in the earlier chapters, we can compute the instantaneous power supplied or absorbed by any device as the product of the instantaneous voltage across the device and the instantaneous current through it.

Consider the circuit shown in **Fig. 9.1**. In general, the steady-state voltage and current for the network can be written as

$$v(t) = V_M \cos(\omega t + \theta_v) \tag{9.1}$$

$$i(t) = I_M \cos(\omega t + \theta_i) \tag{9.2}$$

The instantaneous power is then

$$\begin{aligned} p(t) &= v(t)i(t) \\ &= V_M I_M \cos(\omega t + \theta_v)\cos(\omega t + \theta_i) \end{aligned} \tag{9.3}$$

Employing the following trigonometric identity,

$$\cos\phi_1 \cos\phi_2 = \frac{1}{2}[\cos(\phi_1 - \phi_2) + \cos(\phi_1 + \phi_2)] \tag{9.4}$$

we find that the instantaneous power can be written as

$$p(t) = \frac{V_M I_M}{2}[\cos(\theta_v - \theta_i) + \cos(2\omega t + \theta_v + \theta_i)] \tag{9.5}$$

Note that the instantaneous power consists of two terms. The first term is a constant (i.e., it is time independent), and the second term is a cosine wave of twice the excitation frequency. We will examine this equation in more detail in Section 9.2.

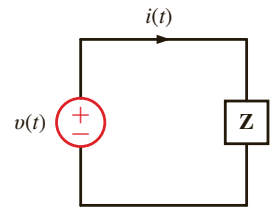

Figure 9.1
Simple ac network.

EXAMPLE 9.1

The circuit in Fig. 9.1 has the following parameters: $v(t) = 4\cos(\omega t + 60°)$ V and $\mathbf{Z} = 2\angle 30°\ \Omega$. We wish to determine equations for the current and the instantaneous power as a function of time and plot these functions with the voltage on a single graph for comparison.

SOLUTION

Since

$$\mathbf{I} = \frac{4\angle 60°}{2\angle 30°} = 2\angle 30°\ \text{A}$$

then

$$i(t) = 2\cos(\omega t + 30°)\ \text{A}$$

From Eq. (9.5),

$$\begin{aligned} p(t) &= 4[\cos(30°) + \cos(2\omega t + 90°)] \\ &= 3.46 + 4\cos(2\omega t + 90°)\ \text{W} \end{aligned}$$

HINT
Note that $p(t)$ contains a dc term and a cosine wave with twice the frequency of $v(t)$ and $i(t)$.

A plot of this function, together with plots of the voltage and current, is shown in **Fig. 9.2**. As can be seen in this figure, the instantaneous power has a dc or constant term and a second term whose frequency is twice that of the voltage or current.

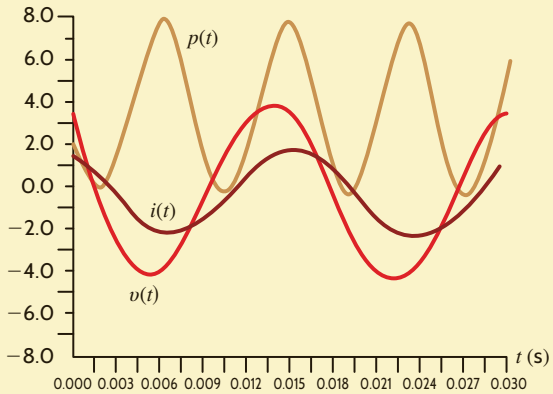

Figure 9.2
Plots of $v(t)$, $i(t)$, and $p(t)$ for the circuit in Example 9.1 using $f = 60$ Hz.

9.2 Average Power

The average value of any periodic waveform (e.g., a sinusoidal function) can be computed by integrating the function over a complete period and dividing this result by the period. Therefore, if the voltage and current are given by Eqs. (9.1) and (9.2), respectively, the average power is

$$P = \frac{1}{T}\int_{t_0}^{t_0+T} p(t)\,dt$$

$$= \frac{1}{T}\int_{t_0}^{t_0+T} V_M I_M \cos(\omega t + \theta_v)\cos(\omega t + \theta_i)\,dt \qquad \textbf{9.6}$$

where t_0 is arbitrary, $T = 2\pi/\omega$ is the period of the voltage or current, and P is measured in watts. Actually, we may average the waveform over any integral number of periods so that Eq. (9.6) can also be written as

$$P = \frac{1}{nT}\int_{t_0}^{t_0+nT} V_M I_M \cos(\omega t + \theta_v)\cos(\omega t + \theta_i)\,dt \qquad \textbf{9.7}$$

where n is a positive integer.

Employing Eq. (9.5) for the expression in (9.6), we obtain

$$P = \frac{1}{T}\int_{t_0}^{t_0+T} \frac{V_M I_M}{2}\left[\cos(\theta_v - \theta_i) + \cos(2\omega t + \theta_v + \theta_i)\right] dt \qquad \textbf{9.8}$$

We could, of course, plod through the indicated integration; however, with a little forethought we can determine the result by inspection. The first term is independent of t, and therefore a constant in the integration. Integrating the constant over the period and dividing by the period simply results in the original constant. The second term is a cosine wave. It is well known that the average value of a cosine wave over one complete period or an integral number of periods is zero, and therefore the second term in Eq. (9.8) vanishes. In view of this discussion, Eq. (9.8) reduces to

HINT
A frequently used equation for calculating the average power.

$$P = \frac{1}{2} V_M I_M \cos(\theta_v - \theta_i) \qquad \textbf{9.9}$$

Note that since $\cos(-\theta) = \cos(\theta)$, the argument for the cosine function can be either $\theta_v - \theta_i$ or $\theta_i - \theta_v$. In addition, note that $\theta_v - \theta_i$ is the angle of the circuit impedance, as shown in Fig. 9.1. Therefore, *for a purely resistive circuit*,

$$P = \frac{1}{2} V_M I_M \qquad \textbf{9.10}$$

and *for a purely reactive circuit*,

$$P = \frac{1}{2} V_M I_M \cos(90°)$$

$$= 0$$

Because purely reactive impedances absorb no average power, they are often called *lossless elements*. The purely reactive network operates in a mode in which it stores energy over one part of the period and releases it over another.

EXAMPLE 9.2

We wish to determine the average power absorbed by the impedance shown in Fig. 9.3.

Figure 9.3
Example *RL* circuit.

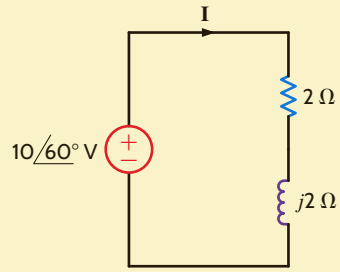

SOLUTION

From the figure we note that

$$\mathbf{I} = \frac{\mathbf{V}}{\mathbf{Z}} = \frac{V_M \angle\theta_v}{2 + j2} = \frac{10\angle 60^\circ}{2.83\angle 45^\circ} = 3.53\angle 15^\circ \text{ A}$$

Therefore,

$$I_M = 3.53 \text{ A} \quad \text{and} \quad \theta_i = 15^\circ$$

Hence,

$$\begin{aligned} P &= \frac{1}{2} V_M I_M \cos(\theta_v - \theta_i) \\ &= \frac{1}{2}(10)(3.53)\cos(60^\circ - 15^\circ) \\ &= 12.5 \text{ W} \end{aligned}$$

Since the inductor absorbs no power, we can employ Eq. (9.10), provided that V_M in that equation is the voltage across the resistor. Using voltage division, we obtain

$$\mathbf{V}_R = \frac{(10\angle 60^\circ)(2)}{2 + j2} = 7.07\angle 15^\circ \text{ V}$$

and therefore,

$$\begin{aligned} P &= \frac{1}{2}(7.07)(3.53) \\ &= 12.5 \text{ W} \end{aligned}$$

In addition, using Ohm's law, we could also employ the expressions

$$P = \frac{1}{2}\frac{V_M^2}{R}$$

or

$$P = \frac{1}{2} I_M^2 R$$

where once again we must be careful that the V_M and I_M in these equations refer to the voltage across the resistor and the current through it, respectively.

EXAMPLE 9.3

For the circuit shown in Fig. 9.4, we wish to determine both the total average power absorbed and the total average power supplied.

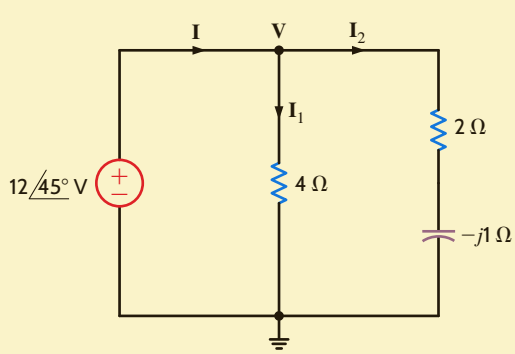

Figure 9.4
Example circuit for illustrating a power balance.

SOLUTION From the figure we note that

$$\mathbf{I}_1 = \frac{12\angle 45^\circ}{4} = 3\angle 45^\circ \text{ A}$$

$$\mathbf{I}_2 = \frac{12\angle 45^\circ}{2 - j1} = \frac{12\angle 45^\circ}{2.24\angle -26.57^\circ} = 5.36\angle 71.57^\circ \text{ A}$$

and therefore,

$$\begin{aligned}\mathbf{I} &= \mathbf{I}_1 + \mathbf{I}_2 \\ &= 3\angle 45^\circ + 5.36\angle 71.57^\circ \\ &= 8.15\angle 62.10^\circ \text{ A}\end{aligned}$$

The average power absorbed in the 4-Ω resistor is

$$P_4 = \frac{1}{2} V_M I_M = \frac{1}{2}(12)(3) = 18 \text{ W}$$

The average power absorbed in the 2-Ω resistor is

$$P_2 = \frac{1}{2} I_M^2 R = \frac{1}{2}(5.34)^2(2) = 28.7 \text{ W}$$

Therefore, the total average power absorbed is

$$P_A = 18 + 28.7 = 46.7 \text{ W}$$

Note that we could have calculated the power absorbed in the 2-Ω resistor using $1/2V_M^2/R$ if we had first calculated the voltage across the 2-Ω resistor.

The total average power supplied by the source is

$$\begin{aligned}P_S &= \frac{1}{2} V_M I_M \cos(\theta_v - \theta_i) \\ &= \frac{1}{2}(12)(8.15)\cos(45^\circ - 62.10^\circ) \\ &= 46.7 \text{ W}\end{aligned}$$

Thus, the total average power supplied is, of course, equal to the total average power absorbed.

LEARNING ASSESSMENTS

E9.1 Find the average power absorbed by each resistor in the network in Fig. E9.1.

ANSWER:
$P_{2\Omega} = 7.20$ W; $P_{4\Omega} = 7.20$ W.

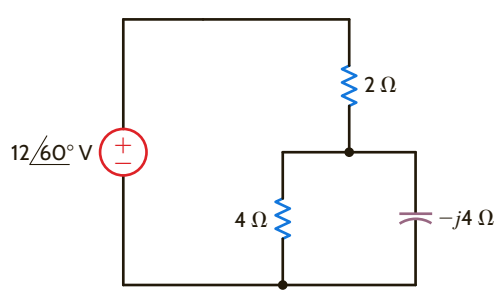

Figure E9.1

E9.2 Given the network in Fig. E9.2, find the average power absorbed by each passive circuit element and the total average power supplied by the current source.

ANSWER:
$P_{3\Omega} = 56.60$ W;
$P_{4\Omega} = 33.96$ W;
$P_L = 0$; $P_{CS} = 90.50$ W.

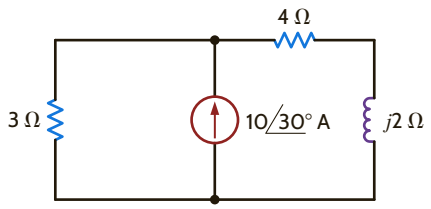

Figure E9.2

E9.3 Find the power supplied and the power absorbed by each element in Fig. E9.3.

ANSWER:
$P_C = 0$ W; $P_L = 0$ W;
$P_{4\Omega} = 1.78$ W; $P_{2\Omega} = 2.22$ W;
$P_{CS} = -4$ W.

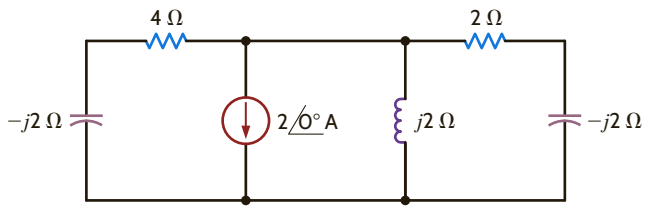

Figure E9.3

When determining average power, if more than one source is present in a network, we can use any of our network analysis techniques to find the necessary voltage and/or current to compute the power. However, we must remember that, in general, we cannot apply superposition to power.

HINT
Superposition is not applicable to power. Why not?

EXAMPLE 9.4

Consider the network shown in Fig. 9.5. We wish to determine the total average power absorbed and supplied by each element.

SOLUTION

From the figure we note that

$$\mathbf{I}_2 = \frac{12\angle 30^\circ}{2} = 6\angle 30^\circ \text{ A}$$

and

$$\mathbf{I}_3 = \frac{12\angle 30^\circ - 6\angle 0^\circ}{j1} = \frac{4.39 + j6}{j1} = 7.44\angle -36.21^\circ \text{ A}$$

The power absorbed by the 2-Ω resistor is

$$P_2 = \frac{1}{2}V_M I_M = \frac{1}{2}(12)(6) = 36 \text{ W}$$

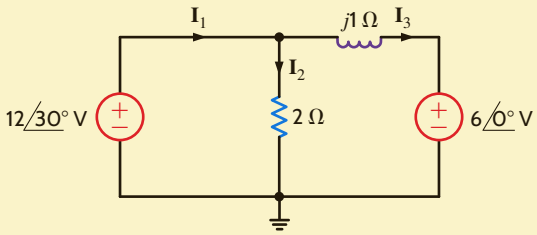

Figure 9.5
Example *RL* circuit with two sources.

HINT

Under the following condition:

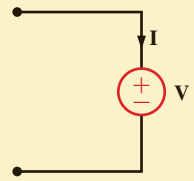

If $P = \text{IV}$ is positive, power is being absorbed.

If $P = \text{IV}$ is negative, power is being generated.

According to the direction of $\mathbf{I}_3$, the $6\angle 0°$-V source is absorbing power. The power it absorbs is given by

$$P_{6\angle 0°} = \frac{1}{2} V_M I_M \cos(\theta_v - \theta_i)$$
$$= \frac{1}{2}(6)(7.44)\cos[0° - (-36.21°)]$$
$$= 18 \text{ W}$$

At this point an obvious question arises: How do we know whether the $6\angle 0°$-V source is supplying power to the remainder of the network or absorbing it? The answer to this question is actually straightforward. If we employ our passive sign convention that was adopted in the earlier chapters—that is, if the current reference direction enters the positive terminal of the source and the answer is positive—the source is absorbing power. If the answer is negative, the source is supplying power to the remainder of the circuit. A generator sign convention could have been used, and under this condition the interpretation of the sign of the answer would be reversed. Note that once the sign convention is adopted and used, the sign for average power will be negative only if the angle difference is greater than 90° (i.e., $|\theta_v - \theta_i| > 90°$).

To obtain the power supplied to the network, we compute $\mathbf{I}_1$ as

$$\mathbf{I}_1 = \mathbf{I}_2 + \mathbf{I}_3$$
$$= 6\angle 30° + 7.44\angle -36.21°$$
$$= 11.29\angle -7.10° \text{ A}$$

Therefore, the power supplied by the $12\angle 30°$-V source using the generator sign convention is

$$P_S = \frac{1}{2}(12)(11.29)\cos(30° + 7.10°)$$
$$= 54 \text{ W}$$

and hence the power absorbed is equal to the power supplied.

LEARNING ASSESSMENTS

E9.4 Determine the total average power absorbed and supplied by each element in the network in Fig. E9.4.

ANSWER:
$P_{CS} = -69.4$ W;
$P_{VS} = 19.8$ W;
$P_{4\Omega} = 49.6$ W; $P_C = 0$.

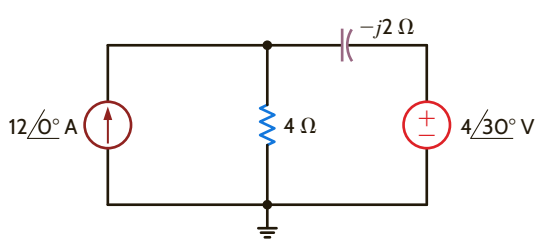

Figure E9.4

E9.5 Given the network in Fig. E9.5, determine the total average power absorbed or supplied by each element.

ANSWER:
$P_{24\angle 0^\circ} = -55.4$ W;
$P_{12\angle 0^\circ} = 5.5$ W;
$P_{2\Omega} = 22.2$ W;
$P_{4\Omega} = 27.7$ W;
$P_L = 0$.

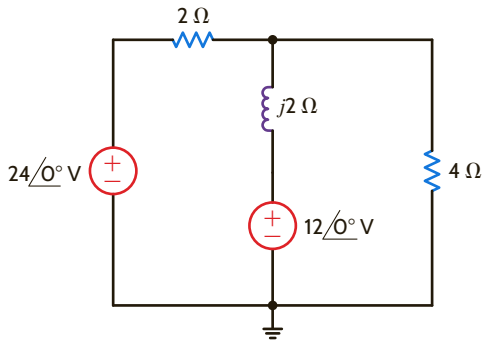

Figure E9.5

E9.6 Determine the average power absorbed by the 4-Ω and 3-Ω resistors in Fig. E9.6.

ANSWER:
$P_{4\Omega} = 9.86$ W;
$P_{3\Omega} = 0.91$ W.

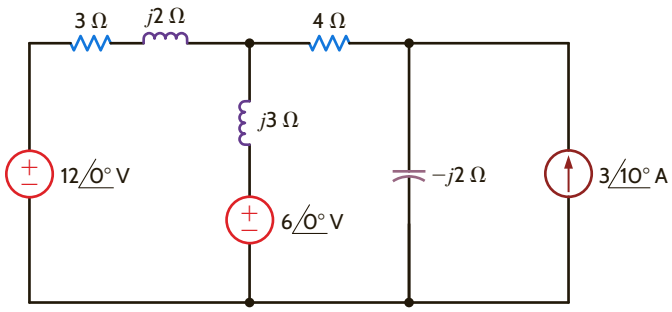

Figure E9.6

9.3 Maximum Average Power Transfer

In our study of resistive networks, we addressed the problem of maximum power transfer to a resistive load. We showed that if the network excluding the load was represented by a Thévenin equivalent circuit, maximum power transfer would result if the value of the load resistor was equal to the Thévenin equivalent resistance (i.e., $R_L = R_{\text{Th}}$). We will now reexamine this issue within the present context to determine the load impedance for the network shown in Fig. 9.6 that will result in maximum average power being absorbed by the load impedance $\mathbf{Z}_L$.

The equation for average power at the load is

$$P_L = \frac{1}{2} V_L I_L \cos(\theta_{v_L} - \theta_{i_L}) \tag{9.11}$$

The phasor current and voltage at the load are given by the expressions

$$\mathbf{I}_L = \frac{\mathbf{V}_{\text{oc}}}{\mathbf{Z}_{\text{Th}} + \mathbf{Z}_L} \tag{9.12}$$

$$\mathbf{V}_L = \frac{\mathbf{V}_{\text{oc}}\mathbf{Z}_L}{\mathbf{Z}_{\text{Th}} + \mathbf{Z}_L} \tag{9.13}$$

where

$$\mathbf{Z}_{\text{Th}} = R_{\text{Th}} + jX_{\text{Th}} \tag{9.14}$$

and

$$\mathbf{Z}_L = R_L + jX_L \tag{9.15}$$

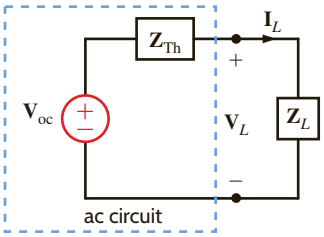

Figure 9.6
Circuit used to examine maximum average power transfer.

HINT

This impedance-matching concept is an important issue in the design of high-speed computer chips and motherboards. For today's high-speed chips with internal clocks running at about 3 GHz and motherboards with a bus speed above 1 GHz, impedance matching is necessary in order to obtain the required speed for signal propagation. Although this high-speed transmission line is based on a distributed circuit (discussed later in electrical engineering courses), the impedance-matching technique for the transmission line is the same as that of the lumped parameter circuit for maximum average power transfer.

The magnitude of the phasor current and voltage are given by the expressions

$$I_L = \frac{V_{oc}}{[(R_{Th} + R_L)^2 + (X_{Th} + X_L)^2]^{1/2}} \tag{9.16}$$

$$V_L = \frac{V_{oc}(R_L^2 + X_L^2)^{1/2}}{[(R_{Th} + R_L)^2 + (X_{Th} + X_L)^2]^{1/2}} \tag{9.17}$$

The phase angles for the phasor current and voltage are contained in the quantity $(\theta_{v_L} - \theta_{i_L})$. Note also that $\theta_{v_L} - \theta_{i_L} = \theta_{\mathbf{Z}_L}$ and, in addition,

$$\cos\theta_{\mathbf{Z}_L} = \frac{R_L}{(R_L^2 + X_L^2)^{1/2}} \tag{9.18}$$

Substituting Eqs. (9.16) to (9.18) into Eq. (9.11) yields

$$P_L = \frac{1}{2}\frac{V_{oc}^2 R_L}{(R_{Th} + R_L)^2 + (X_{Th} + X_L)^2} \tag{9.19}$$

which could, of course, be obtained directly from Eq. (9.16) using $P_L = \frac{1}{2}I_L^2 R_L$. Once again, a little forethought will save us some work. From the standpoint of maximizing P_L, V_{oc} is a constant. The quantity $(X_{Th} + X_L)$ absorbs no power, and therefore any nonzero value of this quantity only serves to reduce P_L. Hence, we can eliminate this term by selecting $X_L = -X_{Th}$. Our problem then reduces to maximizing

$$P_L = \frac{1}{2}\frac{V_{oc}^2 R_L}{(R_L + R_{Th})^2} \tag{9.20}$$

However, this is the same quantity we maximized in the purely resistive case by selecting $R_L = R_{Th}$. Therefore, for maximum average power transfer to the load shown in Fig. 9.6, $\mathbf{Z}_L$ should be chosen so that

$$\mathbf{Z}_L = R_L + jX_L = R_{Th} - jX_{Th} = \mathbf{Z}_{Th}^* \tag{9.21}$$

Finally, if the load impedance is purely resistive (i.e., $X_L = 0$), the condition for maximum average power transfer can be derived via the expression

$$\frac{dP_L}{dR_L} = 0$$

where P_L is the expression in Eq. (9.19) with $X_L = 0$. *The value of R_L that maximizes P_L under the condition $X_L = 0$* is

$$R_L = \sqrt{R_{Th}^2 + X_{Th}^2} \tag{9.22}$$

PROBLEM-SOLVING STRATEGY

MAXIMUM AVERAGE POWER TRANSFER

STEP 1. Remove the load $\mathbf{Z}_L$ and find the Thévenin equivalent for the remainder of the circuit.

STEP 2. Construct the circuit shown in Fig. 9.6.

STEP 3. Select $\mathbf{Z}_L = \mathbf{Z}_{Th}^* = R_{Th} - jX_{Th}$, and then $\mathbf{I}_L = \mathbf{V}_{oc}/2R_{Th}$ and the maximum average power transfer $= \frac{1}{2}\mathbf{I}_L^2 R_{Th} = \mathbf{V}_{oc}^2/8R_{Th}$.

EXAMPLE 9.5

Given the circuit in Fig. 9.7a, we wish to find the value of $\mathbf{Z}_L$ for maximum average power transfer. In addition, we wish to find the value of the maximum average power delivered to the load.

SOLUTION

To solve the problem, we form a Thévenin equivalent at the load. The circuit in Fig. 9.7b is used to compute the open-circuit voltage

$$\mathbf{V}_{oc} = \frac{4\angle 0^\circ\,(2)}{6 + j1}(4) = 5.26\angle -9.46^\circ \text{ V}$$

The Thévenin equivalent impedance can be derived from the circuit in Fig. 9.7c. As shown in the figure,

$$\mathbf{Z}_{Th} = \frac{4(2 + j1)}{6 + j1} = 1.41 + j0.43\ \Omega$$

Therefore, $\mathbf{Z}_L$ for maximum average power transfer is

$$\mathbf{Z}_L = 1.41 - j0.43\ \Omega$$

With $\mathbf{Z}_L$ as given previously, the current in the load is

$$\mathbf{I} = \frac{5.26\angle -9.46^\circ}{2.82} = 1.87\angle -9.46^\circ \text{ A}$$

Therefore, the maximum average power transferred to the load is

$$P_L = \frac{1}{2}I_M^2 R_L = \frac{1}{2}(1.87)^2(1.41) = 2.47 \text{ W}$$

HINT

In this Thévenin analysis,

1. Remove $\mathbf{Z}_L$ and find the voltage across the open terminals, $\mathbf{V}_{oc}$.
2. Determine the impedance $\mathbf{Z}_{Th}$ at the open terminals with all independent sources made zero.
3. Construct the following circuit and determine $\mathbf{I}$ and P_L.

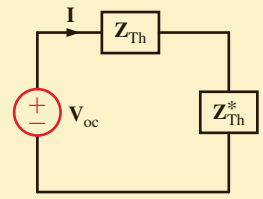

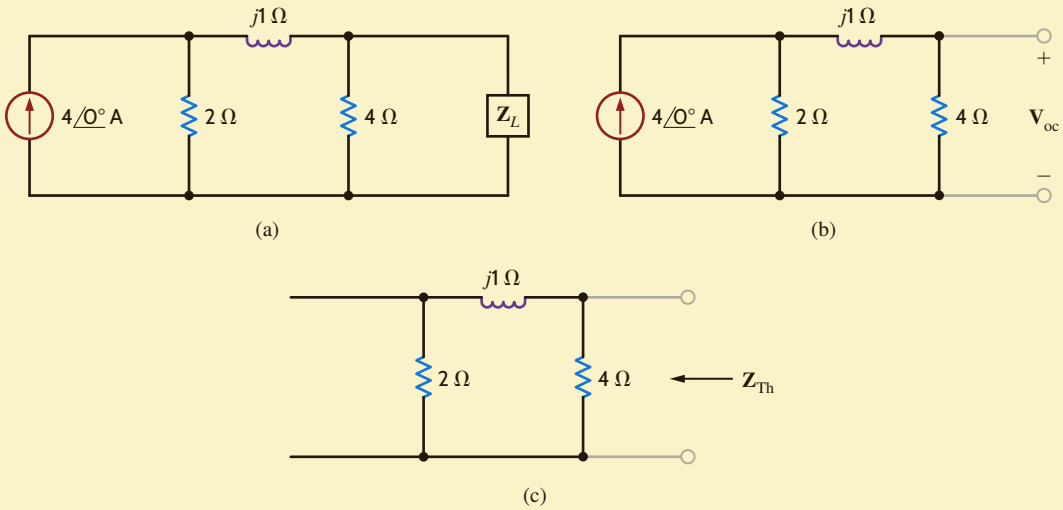

Figure 9.7
Circuits for illustrating maximum average power transfer.

EXAMPLE 9.6

For the circuit shown in Fig. 9.8a, we wish to find the value of $\mathbf{Z}_L$ for maximum average power transfer. In addition, let us determine the value of the maximum average power delivered to the load.

SOLUTION

We will first reduce the circuit, with the exception of the load, to a Thévenin equivalent circuit. The open-circuit voltage can be computed from Fig. 9.8b. The equations for the circuit are

$$\mathbf{V}_x' + 4 = (2 + j4)\mathbf{I}_1$$
$$\mathbf{V}_x' = -2\mathbf{I}_1$$

HINT

When there is a dependent source, both $\mathbf{V}_{oc}$ and $\mathbf{I}_{sc}$ must be found and $\mathbf{Z}_{Th}$ computed from the equation

$$\mathbf{Z}_{Th} = \frac{\mathbf{V}_{oc}}{\mathbf{I}_{sc}}$$

Solving for $\mathbf{I}_1$, we obtain

$$\mathbf{I}_1 = \frac{1\angle -45^\circ}{\sqrt{2}}$$

The open-circuit voltage is then

$$\begin{aligned}\mathbf{V}_{oc} &= 2\mathbf{I}_1 - 4\angle 0^\circ \\ &= \sqrt{2}\angle -45^\circ - 4\angle 0^\circ \\ &= -3 - j1 \\ &= +3.16\angle -161.57^\circ \text{ V}\end{aligned}$$

The short-circuit current can be derived from **Fig. 9.8c**. The equations for this circuit are

$$\begin{aligned}\mathbf{V}_x'' + 4 &= (2 + j4)\mathbf{I} - 2\mathbf{I}_{sc} \\ -4 &= -2\mathbf{I} + (2 - j2)\mathbf{I}_{sc} \\ \mathbf{V}_x'' &= -2(\mathbf{I} - \mathbf{I}_{sc})\end{aligned}$$

Solving these equations for $\mathbf{I}_{sc}$ yields

$$\mathbf{I}_{sc} = -(1 + j2) \text{ A}$$

The Thévenin equivalent impedance is then

$$\mathbf{Z}_{Th} = \frac{\mathbf{V}_{oc}}{\mathbf{I}_{sc}} = \frac{3 + j1}{1 + j2} = 1 - j1\ \Omega$$

Therefore, for maximum average power transfer the load impedance should be

$$\mathbf{Z}_L = 1 + j1\ \Omega$$

The current in this load $\mathbf{Z}_L$ is then

$$\mathbf{I}_L = \frac{\mathbf{V}_{oc}}{\mathbf{Z}_{Th} + \mathbf{Z}_L} = \frac{-3 - j1}{2} = 1.58\angle -161.57^\circ \text{ A}$$

Hence, the maximum average power transferred to the load is

$$\begin{aligned}P_L &= \frac{1}{2}(1.58)^2(1) \\ &= 1.25 \text{ W}\end{aligned}$$

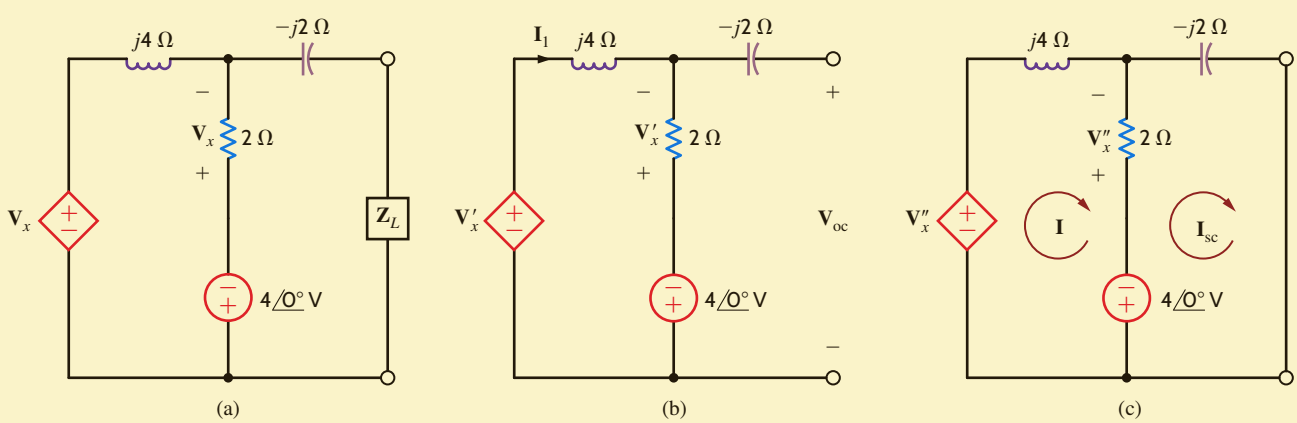

Figure 9.8

Circuits for illustrating maximum average power transfer.

LEARNING ASSESSMENTS

E9.7 Given the network in Fig. E9.7, find $\mathbf{Z}_L$ for maximum average power transfer and the maximum average power transferred to the load.

ANSWER:
$\mathbf{Z}_L = 1 + j1\ \Omega$;
$P_L = 45$ W.

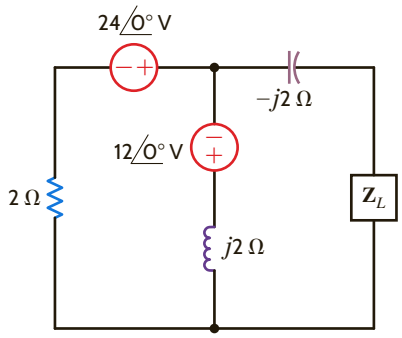

Figure E9.7

E9.8 Find $\mathbf{Z}_L$ for maximum average power transfer and the maximum average power transferred to the load in the network in Fig. E9.8.

ANSWER:
$\mathbf{Z}_L = 2 - j2\ \Omega$;
$P_L = 45$ W.

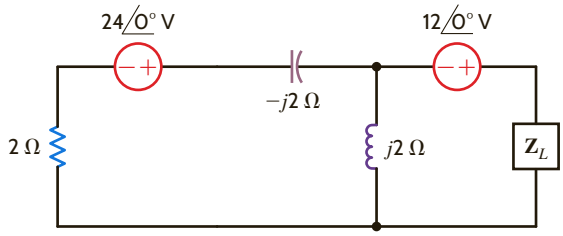

Figure E9.8

E9.9 Determine $\mathbf{Z}_L$ for maximum average power transfer and the value of the maximum average power transferred to $\mathbf{Z}_L$ in Fig. E9.9.

ANSWER:
$\mathbf{Z}_L = 4.79 - j1.68\ \Omega$;
$P_L = 14.26$ W.

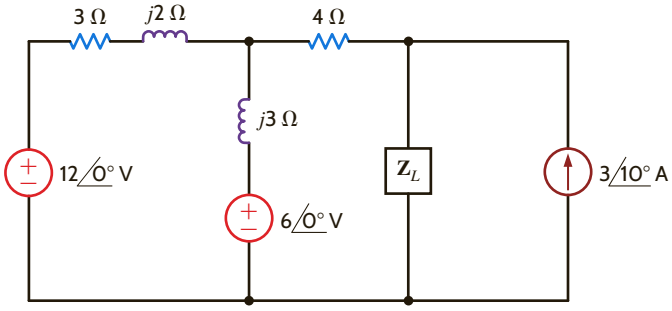

Figure E9.9

E9.10 Find $\mathbf{Z}_L$ for maximum average power transfer and the value of the maximum average power transferred to $\mathbf{Z}_L$ in Fig. E9.10.

ANSWER:
$\mathbf{Z}_L = 5.67 - j2.2\ \Omega$;
$P_L = 9.29$ W.

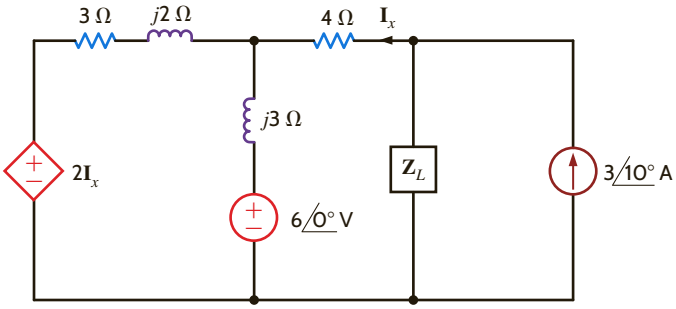

Figure E9.10

9.4 Effective or rms Values

In the preceding sections of this chapter, we have shown that the average power absorbed by a resistive load is directly dependent on the type, or types, of sources that are delivering power to the load. For example, if the source was dc, the average power absorbed was I^2R, and if the source was sinusoidal, the average power was $1/2I_M^2R$. Although these two types of waveforms are extremely important, they are by no means the only waveforms we will encounter in circuit analysis. Therefore, a technique by which we can compare the *effectiveness* of different sources in delivering power to a resistive load would be quite useful.

To accomplish this comparison, we define what is called the *effective value of a periodic waveform*, representing either voltage or current. Although either quantity could be used, we will employ current in the definition. Hence, we define the effective value of a periodic current as a constant or dc value, which as current would deliver the same average power to a resistor R. Let us call the constant current I_{eff}. Then the average power delivered to a resistor as a result of this current is

$$P = I_{\text{eff}}^2 R$$

Similarly, the average power delivered to a resistor by a periodic current $i(t)$ is

$$P = \frac{1}{T}\int_{t_0}^{t_0+T} i^2(t)R\,dt$$

Equating these two expressions, we find that

$$I_{\text{eff}} = \sqrt{\frac{1}{T}\int_{t_0}^{t_0+T} i^2(t)\,dt} \qquad \textbf{9.23}$$

Note that this effective value is found by first determining the *square* of the current, then computing the average or *mean* value, and finally, taking the square *root*. Thus, in "reading" the mathematical Eq. (9.23), we are determining the root mean square, which we abbreviate as rms, and therefore I_{eff} is called I_{rms}.

Since dc is a constant, the rms value of dc is simply the constant value. Let us now determine the rms value of other waveforms. The most important waveform is the sinusoid, and therefore, we address this particular one in the following example.

EXAMPLE 9.7

We wish to compute the rms value of the waveform $i(t) = I_M\cos(\omega t - \theta)$, which has a period of $T = 2\pi/\omega$.

SOLUTION

Substituting these expressions into Eq. (9.23) yields

$$I_{\text{rms}} = \left[\frac{1}{T}\int_0^T I_M^2\cos^2(\omega t - \theta)\,dt\right]^{1/2}$$

Using the trigonometric identity

$$\cos^2\phi = \frac{1}{2} + \frac{1}{2}\cos 2\phi$$

we find that the preceding equation can be expressed as

$$I_{\text{rms}} = I_M\left\{\frac{\omega}{2\pi}\int_0^{2\pi/\omega}\left[\frac{1}{2} + \frac{1}{2}\cos(2\omega t - 2\theta)\right]dt\right\}^{1/2}$$

Since we know that the average or mean value of a cosine wave is zero,

$$I_{\text{rms}} = I_M\left(\frac{\omega}{2\pi}\int_0^{2\pi/\omega}\frac{1}{2}\,dt\right)^{1/2}$$

$$= I_M\left[\frac{\omega}{2\pi}\left(\frac{t}{2}\right)\Big|_0^{2\pi/\omega}\right]^{1/2} = \frac{I_M}{\sqrt{2}} \qquad \textbf{9.24}$$

Therefore, the rms value of a sinusoid is equal to the maximum value divided by $\sqrt{2}$. Hence, a sinusoidal current with a maximum value of I_M delivers the same average power to a resistor R as a dc current with a value of $I_M/\sqrt{2}$. Recall that earlier a phasor **X** was defined as $X_M\underline{/\theta}$ for a sinusoidal wave of the form $X_M \cos(\omega t + \theta)$. This phasor can also be represented as $X_M/\sqrt{2}\,\underline{/\theta}$ if the units are given in rms. For example, $120\underline{/30^\circ}$ V rms is equivalent to $170\underline{/30^\circ}$ V.

On using the rms values for voltage and current, the average power can be written, in general, as

$$P = V_{\text{rms}} I_{\text{rms}} \cos(\theta_v - \theta_i) \qquad \textbf{9.25}$$

The power absorbed by a resistor R is

$$P = I_{\text{rms}}^2 R = \frac{V_{\text{rms}}^2}{R} \qquad \textbf{9.26}$$

In dealing with voltages and currents in numerous electrical applications, it is important to know whether the values quoted are maximum, average, rms, or what. We are familiar with the 120-V ac electrical outlets in our home. In this case, the 120 V is the rms value of the voltage in our home. The maximum or peak value of this voltage is $120\sqrt{2} = 170$ V. The voltage at our electrical outlets could be written as $170 \cos 377t$ V. The maximum or peak value must be given if we write the voltage in this form. There should be no question in our minds that this is the peak value. It is common practice to specify the voltage rating of ac electrical devices in terms of the rms voltage. For example, if you examine an incandescent light bulb, you will see a voltage rating of 120 V, which is the rms value. For now we will add an rms to our voltages and currents to indicate that we are using rms values in our calculations.

EXAMPLE 9.8

Determine the rms value of the current waveform in Fig. 9.9 and use this value to compute the average power delivered to a 2-Ω resistor through which this current is flowing.

SOLUTION

The current waveform is periodic with a period of $T = 4$ s. The rms value is

$$I_{\text{rms}} = \left\{\frac{1}{4}\left[\int_0^2 (4)^2\,dt + \int_2^4 (-4)^2\,dt\right]\right\}^{1/2}$$

$$= \left[\frac{1}{4}\left(16t\Big|_0^2 + 16t\Big|_2^4\right)\right]^{1/2}$$

$$= 4 \text{ A}$$

The average power delivered to a 2-Ω resistor with this current is

$$P = I_{\text{rms}}^2 R = (4)^2(2) = 32 \text{ W}$$

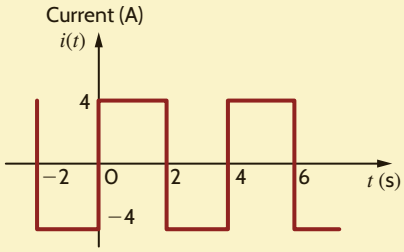

Figure 9.9
Waveform used to illustrate rms values.

EXAMPLE 9.9

We wish to compute the rms value of the voltage waveform shown in Fig. 9.10.

SOLUTION

The waveform is periodic with period $T = 3$ s. The equation for the voltage in the time frame $0 \le t \le 3$ s is

$$v(t) = \begin{cases} 4t\ \text{V} & 0 < t \le 1\ \text{s} \\ 0\ \text{V} & 1 < t \le 2\ \text{s} \\ -4t + 8\ \text{V} & 2 < t \le 3\ \text{s} \end{cases}$$

The rms value is

$$V_{\text{rms}} = \left\{ \frac{1}{3} \left[\int_0^1 (4t)^2\, dt + \int_1^2 (0)^2\, dt + \int_2^3 (8 - 4t)^2\, dt \right] \right\}^{1/2}$$

$$= \left[\frac{1}{3} \left(\frac{16t^3}{3} \Big|_0^1 + \left(64t - \frac{64t^2}{2} + \frac{16t^3}{3} \right) \Big|_2^3 \right) \right]^{1/2}$$

$$= 1.89\ \text{V}$$

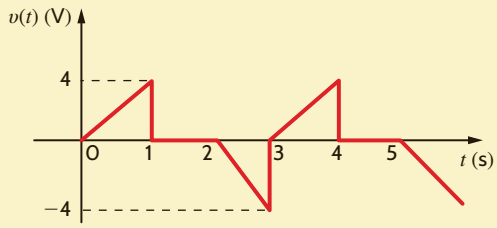

Figure 9.10
Waveform used to illustrate rms values.

LEARNING ASSESSMENTS

E9.11 The current waveform in Fig. E9.11 is flowing through a 4-Ω resistor. Compute the average power delivered to the resistor.

ANSWER:
$P = 32$ W.

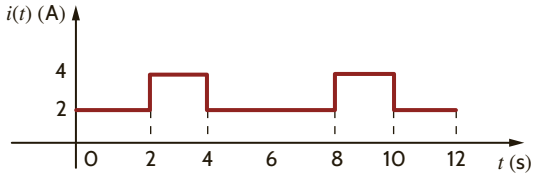

Figure E9.11

E9.12 The current waveform in Fig. E9.12 is flowing through a 10-Ω resistor. Determine the average power delivered to the resistor..

ANSWER:
$P = 80$ W.

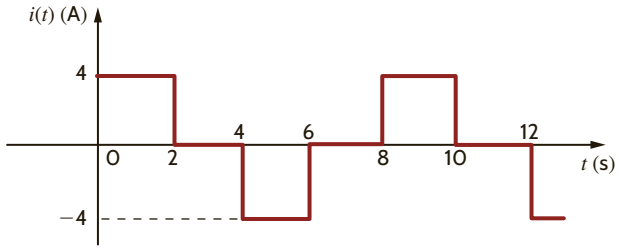

Figure E9.12

E9.13 The voltage across a 2-W resistor is given by the waveform in Fig. E9.13. Find the average power absorbed by the resistor.

ANSWER:
$P = 38.22$ W.

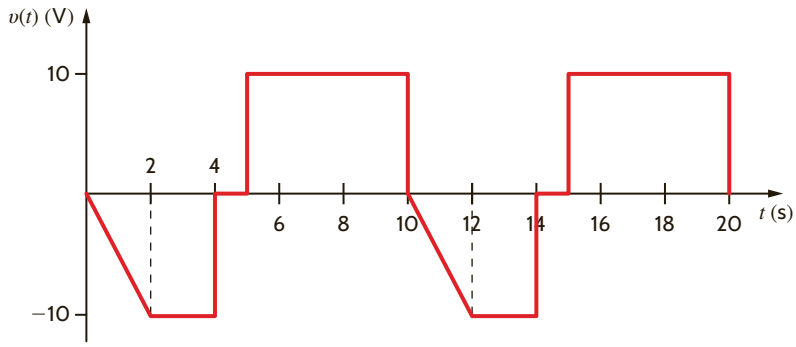

Figure E9.13

E9.14 Compute the rms value of the voltage waveform shown in Fig. E9.14.

ANSWER:
$V_{rms} = 1.633$ V.

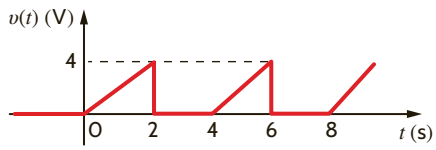

Figure E9.14

9.5 The Power Factor

The power factor is a very important quantity. Its importance stems in part from the economic impact it has on industrial users of large amounts of power. In this section we carefully define this term and then illustrate its significance via some practical examples.

In Section 9.4 we showed that a load operating in the ac steady state is delivered an average power of

$$P = V_{rms} I_{rms} \cos(\theta_v - \theta_i)$$

We will now further define the terms in this important equation. The product $V_{rms}I_{rms}$ is referred to as the *apparent power*. Although the term $\cos(\theta_v - \theta_i)$ is a dimensionless quantity, and the units of P are watts, apparent power is normally stated in volt-amperes (VA) or kilovolt-amperes (kVA) to distinguish it from average power.

We now define the *power factor* (pf) as the ratio of the average power to the apparent power; that is,

$$\text{pf} = \frac{P}{V_{rms} I_{rms}} = \cos(\theta_v - \theta_i) \qquad \textbf{9.27}$$

where

$$\cos(\theta_v - \theta_i) = \cos\theta_{\mathbf{Z}_L} \qquad \textbf{9.28}$$

The angle $\theta_v - \theta_i = \cos\theta_{\mathbf{Z}_L}$ is the phase angle of the load impedance and is often referred to as the *power factor angle*. The two extreme positions for this angle correspond to a purely resistive load where $\theta_{\mathbf{Z}_L} = 0$ and the pf is 1, and the purely reactive load where $\theta_{\mathbf{Z}_L} = \pm 90°$ and the pf is 0. It is, of course, possible to have a unity pf for a load containing R, L, and C elements if the values of the circuit elements are such that a zero phase angle is obtained at the particular operating frequency.

There is, of course, a whole range of power factor angles between $\pm 90°$ and $0°$. If the load is an equivalent RC combination, then the pf angle lies between the limits $-90° < \theta_{\mathbf{Z}_L} < 0°$. On the other hand, if the load is an equivalent RL combination, then the pf angle lies between the limits $0 < \theta_{\mathbf{Z}_L} < 90°$. Obviously, confusion in identifying the type of

load could result, due to the fact that $\cos\theta_{\mathbf{Z}_L} = \cos(-\theta_{\mathbf{Z}_L})$. To circumvent this problem, the pf is said to be either *leading* or *lagging,* where these two terms *refer to the phase of the current with respect to the voltage*. Since the current leads the voltage in an *RC* load, the load has a leading pf. In a similar manner, an *RL* load has a lagging pf; therefore, load impedances of $\mathbf{Z}_L = 1 - j1\ \Omega$ and $\mathbf{Z}_L = 2 + j1\ \Omega$ have power factors of $\cos(-45°) = 0.707$ leading and $\cos(26.57°) = 0.894$ lagging, respectively.

EXAMPLE 9.10

An industrial load consumes 88 kW at a pf of 0.707 lagging from a 480-V rms line. The transmission line resistance from the power company's transformer to the plant is 0.08 Ω. Let us determine the power that must be supplied by the power company (a) under present conditions and (b) if the pf is somehow changed to 0.90 lagging. (It is economically advantageous to have a power factor as close to one as possible.)

SOLUTION

a. The equivalent circuit for these conditions is shown in **Fig. 9.11**. Using Eq. (9.27), we obtain the magnitude of the rms current into the plant:

HINT

Technique

1. Given P_L, pf, and V_{rms}, determine I_{rms}.
2. Then $P_S = P_L + I_{rms}^2 R_{line}$, where R_{line} is the line resistance.

$$I_{rms} = \frac{P_L}{(\text{pf})(V_{rms})} = \frac{(88)(10^3)}{(0.707)(480)} = 259.3 \text{ A rms}$$

The power that must be supplied by the power company is

$$P_S = P_L + (0.08)I_{rms}^2 = 88{,}000 + (0.08)(259.3)^2 = 93.38 \text{ kW}$$

b. Suppose now that the pf is somehow changed to 0.90 lagging but the voltage remains constant at 480 V. The rms load current for this condition is

$$I_{rms} = \frac{P_L}{(\text{pf})(V_{rms})} = \frac{(88)(10^3)}{(0.90)(480)} = 203.7 \text{ A rms}$$

Under these conditions, the power company must generate

$$P_S = P_L + (0.08)I_{rms}^2 = 88{,}000 + (0.08)(203.7)^2 = 91.32 \text{ kW}$$

Note carefully the difference between the two cases. A simple change in the pf of the load from 0.707 lagging to 0.90 lagging has had an interesting effect. Note that in the first case the power company must generate 93.38 kW in order to supply the plant with 88 kW of power because the low power factor means that the line losses will be high—5.38 kW. However, in the second case the power company need only generate 91.32 kW in order to supply the plant with its required power, and the corresponding line losses are only 3.32 kW.

Figure 9.11

Example circuit for examining changes in power factor.

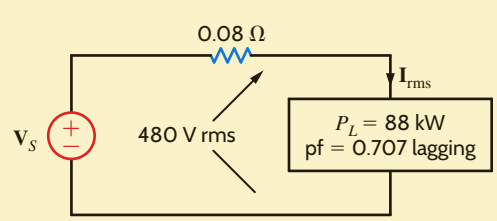

Example 9.10 clearly indicates the economic impact of the load's power factor. The cost of producing electricity for a large electric utility can easily be in the billions of dollars. A low power factor at the load means that the utility generators must be capable of carrying more current at constant voltage, and they must also supply power for higher $I_{rms}^2 R_{line}$ losses than would be required if the load's power factor were high. Since line losses represent energy expended in heat and benefit no one, the utility will insist that a plant maintain a high pf, typically 0.9 lagging, and adjust the rate it charges a customer that does not conform to this requirement. We will demonstrate a simple and economical technique for achieving this power factor correction in a future section.

LEARNING ASSESSMENT

E9.15 An industrial load consumes 100 kW at 0.707 pf lagging. The 60-Hz line voltage at the load is 480 $\angle 0°$ V rms. The transmission-line resistance between the power company transformer and the load is 0.1 Ω. Determine the power savings that could be obtained if the pf is changed to 0.94 lagging.

ANSWER:
Power saved is 3.771 kW.

9.6 Complex Power

In our study of ac steady-state power, it is convenient to introduce another quantity, which is commonly called *complex power*. To develop the relationship between this quantity and others we have presented in the preceding sections, consider the circuit shown in Fig. 9.12.

The complex power is defined to be

$$\mathbf{S} = \mathbf{V}_{rms}\mathbf{I}_{rms}^* \qquad 9.29$$

where $\mathbf{I}_{rms}^*$ refers to the complex conjugate of $\mathbf{I}_{rms}$; that is, if $\mathbf{I}_{rms} = I_{rms}\angle\theta_i = I_R + jI_I$, then $\mathbf{I}_{rms}^* = I_{rms}\angle{-\theta_i} = I_R - jI_I$. Complex power is then

$$\mathbf{S} = V_{rms}\angle\theta_v I_{rms}\angle{-\theta_i} = V_{rms}I_{rms}\angle\theta_v - \theta_i \qquad 9.30$$

or

$$\mathbf{S} = V_{rms}I_{rms}\cos(\theta_v - \theta_i) + jV_{rms}I_{rms}\sin(\theta_v - \theta_i) \qquad 9.31$$

where, of course, $\theta_v - \theta_i = \theta_{\mathbf{Z}}$. We note from Eq. (9.31) that the real part of the complex power is simply the *real* or *average power*. The imaginary part of **S** we call the *reactive* or *quadrature power*. Therefore, complex power can be expressed in the form

$$\mathbf{S} = P + jQ \qquad 9.32$$

where

$$P = \mathrm{Re}(\mathbf{S}) = V_{rms}I_{rms}\cos(\theta_v - \theta_i) \qquad 9.33$$

$$Q = \mathrm{Im}(\mathbf{S}) = V_{rms}I_{rms}\sin(\theta_v - \theta_i) \qquad 9.34$$

As shown in Eq. (9.31), the magnitude of the complex power is what we have called the *apparent power*, and the phase angle for complex power is simply the power factor angle. Complex power, like apparent power, is measured in volt-amperes, real power is measured in watts, and to distinguish Q from the other quantities, which in fact have the same dimensions, it is measured in volt-amperes reactive, or var.

Now let's examine the expressions in Eqs. (9.33) and (9.34) in more detail for our three basic circuit elements: R, L, and C. For a resistor, $\theta_v - \theta_i = 0°$, $\cos(\theta_v - \theta_i) = 1$, and $\sin(\theta_v - \theta_i) = 0$. As a result, a resistor absorbs real power ($P > 0$) but does not absorb any reactive power ($Q = 0$). For an inductor, $\theta_v - \theta_i = 90°$ and

$$P = V_{rms}I_{rms}\cos(90°) = 0$$
$$Q = V_{rms}I_{rms}\sin(90°) > 0$$

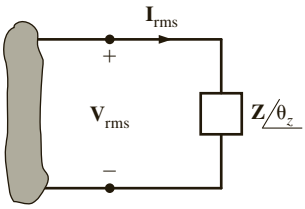

Figure 9.12
Circuit used to explain power relationships.

An inductor absorbs reactive power but does not absorb real power. Repeating for a capacitor, we get $\theta_v - \theta_i = -90°$ and

$$P = V_{\text{rms}} I_{\text{rms}} \cos(-90°) = 0$$
$$Q = V_{\text{rms}} I_{\text{rms}} \sin(-90°) < 0$$

A capacitor does not absorb any real power; however, the reactive power is now negative. How do we interpret the negative reactive power? Refer to Fig. 9.12 and note that the voltage and current are specified such that they satisfy the passive sign convention. In this case, the product of the voltage and current gives us the power absorbed by the impedance in that figure. If the reactive power absorbed by the capacitor is negative, then the capacitor must be supplying reactive power. The fact that capacitors are a source of reactive power will be utilized in the next section on power factor correction.

We see that resistors absorb only real power, while inductors and capacitors absorb only reactive power. What is a fundamental difference between these elements? Resistors only absorb energy. On the other hand, capacitors and inductors store energy and then release it back to the circuit. Since inductors and capacitors absorb only reactive power and not real power, we can conclude that reactive power is related to energy storage in these elements.

Now let's substitute $\mathbf{V}_{\text{rms}} = \mathbf{I}_{\text{rms}} * \mathbf{Z}$ into Eq. (9.29). Multiplying $\mathbf{I}_{\text{rms}} * \mathbf{I}^*_{\text{rms}} = I_{\text{rms}} \underline{/\theta_i} * I_{\text{rms}} \underline{/-\theta_i}$ yields I^2_{rms}. The complex power absorbed by an impedance can be obtained by multiplying the square of the rms magnitude of the current flowing through that impedance by the impedance.

$$\mathbf{S} = \mathbf{V}_{\text{rms}} \mathbf{I}^*_{\text{rms}} = (\mathbf{I}_{\text{rms}} \mathbf{Z}) \mathbf{I}^*_{\text{rms}} = \mathbf{I}_{\text{rms}} \mathbf{I}^*_{\text{rms}} \mathbf{Z} = I^2_{\text{rms}} \mathbf{Z} = I^2_{\text{rms}} (R + jX) = P + jQ \qquad \textbf{9.35}$$

Instead of substituting for $\mathbf{V}_{\text{rms}}$ in Eq. (9.29), let's substitute for $\mathbf{I}_{\text{rms}}$:

$$\mathbf{S} = \mathbf{V}_{\text{rms}} \mathbf{I}^*_{\text{rms}} = \mathbf{V}_{\text{rms}} \left(\frac{\mathbf{V}_{\text{rms}}}{\mathbf{Z}} \right)^* = \frac{V^2_{\text{rms}}}{\mathbf{Z}^*} = V^2_{\text{rms}} \mathbf{Y}^* = V^2_{\text{rms}} (G + jB)^* = P + jQ \qquad \textbf{9.36}$$

This expression tells us that we can calculate the complex power absorbed by an admittance by multiplying the square of the rms magnitude of the voltage across the admittance by the conjugate of the admittance. Suppose the box in Fig. 9.12 contains a capacitor. The admittance for a capacitor is $j\omega C$. Plugging into the equation above yields

$$\mathbf{S} = V^2_{\text{rms}} (j\omega C)^* = -j\omega C V^2_{\text{rms}} \qquad \textbf{9.37}$$

Note the negative sign on the complex power. This agrees with our previous statement that a capacitor does not absorb real power but is a source of reactive power.

The diagrams in **Fig. 9.13** further explain the relationships among the various quantities of power. As shown in **Fig. 9.13a**, the phasor current can be split into two components: one that is in phase with $\mathbf{V}_{\text{rms}}$ and one that is 90° out of phase with $\mathbf{V}_{\text{rms}}$. Eqs. (9.33) and (9.34) illustrate that the in-phase component produces the real power, and the 90° component, called the

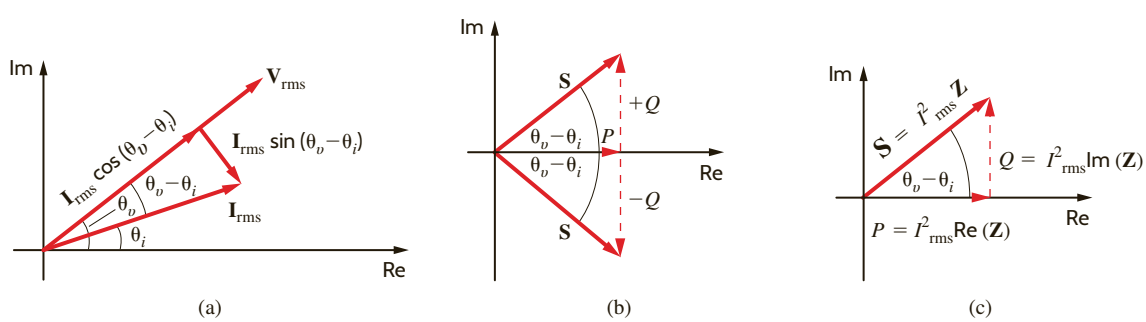

Figure 9.13

Diagram for illustrating power relationships.

quadrature component, produces the reactive or quadrature power. In addition, Eqs. (9.33) and (9.34) indicate that

$$\tan(\theta_v - \theta_i) = \frac{Q}{P} \qquad \textbf{9.38}$$

which relates the pf angle to P and Q in what is called the *power triangle*.

The relationships among **S**, P, and Q can be expressed via the diagrams shown in **Figs. 9.13b** and **c**. In Fig. 9.13b we note the following conditions. If Q is positive, the load is inductive, the power factor is lagging, and the complex number **S** lies in the first quadrant. If Q is negative, the load is capacitive, the power factor is leading, and the complex number **S** lies in the fourth quadrant. If Q is zero, the load is resistive, the power factor is unity, and the complex number **S** lies along the positive real axis. Fig. 9.13c illustrates the relationships expressed by Eqs. (9.35) to (9.37) for an inductive load.

In Chapter 1, we introduced Tellegen's theorem, which states that the sum of the powers absorbed by all elements in an electrical network is zero. Based on this theorem, we can also state that complex power is conserved in an ac network—the total complex power delivered to any number of individual loads is equal to the sum of the complex powers delivered to the loads, regardless of how loads are interconnected.

PROBLEM-SOLVING STRATEGY

DETERMINING P OR S

If $v(t)$ and $i(t)$ are known and we wish to find P given an impedance $\mathbf{Z}\angle\theta = R + jX$, two viable approaches are as follows:

STEP 1. Determine **V** and **I** and then calculate

$$P = V_{\text{rms}} I_{\text{rms}} \cos\theta \qquad \text{or} \qquad P = V_{\text{rms}} I_{\text{rms}} \cos(\theta_v - \theta_i)$$

STEP 2. Use **I** to calculate the real part of **S**—that is,

$$P = R_e(\mathbf{S}) = I^2 R$$

The latter method may be easier to calculate than the former. However, if the imaginary part of the impedance, X, is not zero, then

$$P \neq \frac{V^2}{R}$$

which is a common mistake. Furthermore, the P and Q portions of **S** are directly related to $Z\angle\theta$ and provide a convenient way in which to relate power, current, and impedance. That is,

$$\tan\theta = \frac{Q}{P}$$

$$\mathbf{S} = I^2\mathbf{Z}$$

The following example illustrates the usefulness of **S**.

EXAMPLE 9.11

A load operates at 20 kW, 0.8 pf lagging. The load voltage is $220\angle 0°$ V rms at 60 Hz. The impedance of the line is $0.09 + j0.3\ \Omega$. We wish to determine the voltage and power factor at the input to the line.

SOLUTION

The circuit diagram for this problem is shown in **Fig. 9.14**. As illustrated in Fig. 9.13,

$$S = \frac{P}{\cos\theta} = \frac{P}{\text{pf}} = \frac{20{,}000}{0.8} = 25{,}000\ \text{VA}$$

Therefore, at the load

$$\mathbf{S}_L = 25{,}000\angle\theta = 25{,}000\angle 36.87^\circ = 20{,}000 + j15{,}000 \text{ VA}$$

Since $\mathbf{S}_L = \mathbf{V}_L\mathbf{I}_L^*$

$$\mathbf{I}_L = \left[\frac{25{,}000\angle 36.87^\circ}{220\angle 0^\circ}\right]^* = 113.64\angle -36.87^\circ \text{ A rms}$$

The complex power losses in the line are

$$\begin{aligned}\mathbf{S}_{\text{line}} &= I_L^2\,\mathbf{Z}_{\text{line}}\\ &= (113.64)^2(0.09 + j0.3)\\ &= 1162.26 + j3874.21 \text{ VA}\end{aligned}$$

As stated earlier, complex power is conserved, and therefore, the complex power at the generator is

$$\begin{aligned}\mathbf{S}_S &= \mathbf{S}_L + \mathbf{S}_{\text{line}}\\ &= 21{,}162.26 + j18{,}874.21\\ &= 28{,}356.25\angle 41.73^\circ \text{ VA}\end{aligned}$$

Hence, the generator voltage is

$$V_S = \frac{|S_S|}{I_L} = \frac{28{,}356.25}{113.64} = 249.53 \text{ V rms}$$

and the generator power factor is

$$\cos(41.73^\circ) = 0.75 \text{ lagging}$$

HINT

1. Use the given P_L, cos θ, and V_L rms to obtain $\mathbf{S}_L$ and $\mathbf{I}_L$ based on Eqs. (9.33) and (9.29), respectively.
2. Use $\mathbf{I}_L$ and $\mathbf{Z}_{\text{line}}$ to obtain $\mathbf{S}_{\text{line}}$ using Eq. (9.35).
3. Use $\mathbf{S}_S = \mathbf{S}_{\text{line}} + \mathbf{S}_L$.
4. $\mathbf{V}_S = \mathbf{S}_S/\mathbf{I}_L^*$ yields V_S and θ_v. Since $\mathbf{V}_S = V_S\angle\theta_v$ and θ_i is the phase of $\mathbf{I}_L$, pf = cos $(\theta_v - \theta_i)$.

We could have solved this problem using KVL. For example, we calculated the load current as

$$\mathbf{I}_L = 113.64\angle -36.87^\circ \text{ A rms}$$

Hence, the voltage drop in the transmission line is

$$\begin{aligned}\mathbf{V}_{\text{line}} &= (113.64\angle -36.87^\circ)(0.09 + j0.3)\\ &= 35.59\angle 36.43^\circ \text{ V rms}\end{aligned}$$

Therefore, the generator voltage is

$$\begin{aligned}\mathbf{V}_S &= 220\angle 0^\circ + 35.59\angle 36.43^\circ\\ &= 249.53\angle 4.86^\circ \text{ V rms}\end{aligned}$$

Hence, the generator voltage is 249.53 V rms. In addition,

$$\theta_v - \theta_i = 4.86^\circ - (-36.87^\circ) = 41.73^\circ$$

and therefore,

$$\text{pf} = \cos(41.73^\circ) = 0.75 \text{ lagging}$$

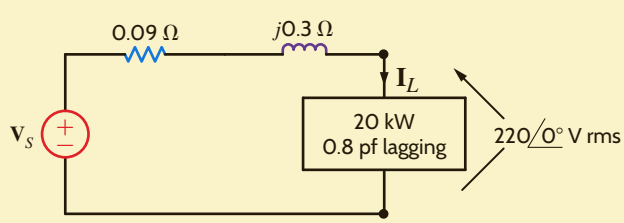

Figure 9.14
Example circuit for power analysis.

EXAMPLE 9.12

Two networks A and B are connected by two conductors having a net impedance of $\mathbf{Z} = 0 + j1\ \Omega$, as shown in Fig. 9.15. The voltages at the terminals of the networks are $\mathbf{V}_A = 120\angle 30°$ V rms and $\mathbf{V}_B = 120\angle 0°$ V rms. We wish to determine the average power flow between the networks and identify which is the source and which is the load.

SOLUTION

As shown in Fig. 9.15,

$$\mathbf{I} = \frac{\mathbf{V}_A - \mathbf{V}_B}{\mathbf{Z}} = \frac{120\angle 30° - 120\angle 0°}{j1} = 62.12\angle 15°\ \text{A rms}$$

The power delivered by network A is

$$P_A = |\mathbf{V}_A||\mathbf{I}|\cos(\theta_{\mathbf{V}_A} - \theta_{\mathbf{I}}) = (120)(62.12)\cos(30° - 15°) = 7200.4\ \text{W}$$

The power absorbed by network B is

$$P_B = |\mathbf{V}_B||\mathbf{I}|\cos(\theta_{\mathbf{V}_B} - \theta_{\mathbf{I}}) = (120)(62.12)\cos(0° - 15°) = 7200.4\ \text{W}$$

If the power flow had actually been from network B to network A, the resultant signs on P_A and P_B would have been negative.

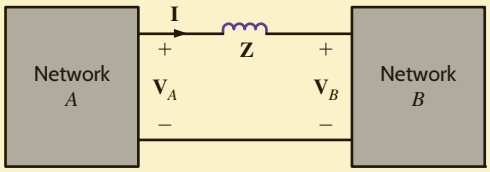

Figure 9.15
Network used in Example 9.12.

LEARNING ASSESSMENTS

E9.16 An industrial load requires 40 kW at 0.84 pf lagging. The load voltage is $220\angle 0°$ V rms at 60 Hz. The transmission-line impedance is $0.1 + j0.25\ \Omega$. Determine the real and reactive power losses in the line and the real and reactive power required at the input to the transmission line.

ANSWER:
$P_{\text{line}} = 4.685$ kW;
$Q_{\text{line}} = 11.713$ kvar;
$P_S = 44.685$ kW;
$Q_S = 37.55$ kvar.

E9.17 A load requires 60 kW at 0.85 pf lagging. The 60-Hz line voltage at the load is $220\angle 0°$ V rms. If the transmission-line impedance is $0.12 + j0.18\ \Omega$, determine the line voltage and power factor at the input.

ANSWER:
$\mathbf{V}_{\text{in}} = 284.6\angle 5.8°$ V rms;
$\text{pf}_{\text{in}} = 0.792$ lagging.

E9.18 The source in Fig. E9.18 supplies 40 kW at a power factor of 0.9 lagging. The real and reactive losses of the transmission-line feeder are 1.6 kW and 2.1 kvar, respectively. Find the load voltage and the real and reactive power absorbed by the load.

ANSWER:
$\mathbf{V}_L = 416.83\angle{-162^\circ}$ V;
$P_L = 38.4$ kW;
$Q_L = 17.27$ kvar.

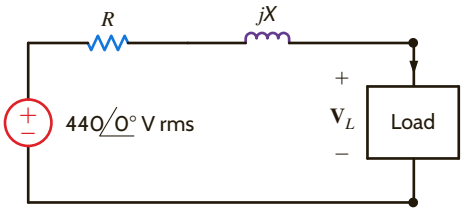

Figure E9.18

E9.19 Find the power factor of the source and $v_S(t)$ in Fig. E9.19 if $f = 60$ Hz.

ANSWER:
$\text{pf}_{\text{tn}} = 0.9457$ lagging; $v_S(t) = 765.94\cos(377t - 7.77^\circ)$ V.

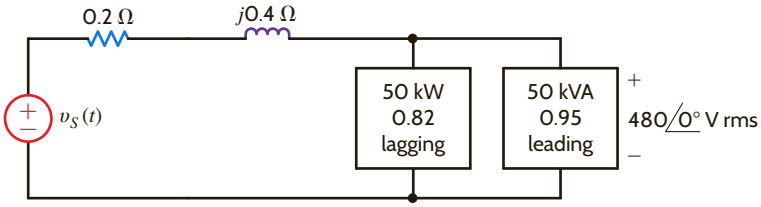

Figure E9.19

9.7 Power Factor Correction

Industrial plants that require large amounts of power have a wide variety of loads. However, by nature the loads normally have a lagging power factor. In view of the results obtained in Example 9.10, we are naturally led to ask whether there is any convenient technique for raising the power factor of a load. Since a typical load may be a bank of induction motors or other expensive machinery, the technique for raising the pf should be an economical one to be feasible.

To answer the question we pose, consider the diagram in **Fig. 9.16**. A typical industrial load with a lagging pf is supplied by an electrical source. Also shown is the power triangle for the load. The load pf is $\cos(\theta_{\text{old}})$. If we want to improve the power factor, we need to reduce the angle shown on the power triangle in Fig. 9.16. From Eq. (9.38) we know that the tangent of this angle is equal to the ratio of Q to P. We could decrease the angle by increasing P. This is not an economically attractive solution because our increased power consumption would increase the monthly bill from the electric utility.

The other option we have to reduce this angle is to decrease Q. How can we decrease Q? Recall from a previous section that a capacitor is a source of reactive power and does not absorb real power. Suppose we connect a capacitor in parallel with our industrial load as shown in **Fig. 9.17**. The corresponding power triangles for this diagram are also shown in Fig. 9.17. Let's define

$$\mathbf{S}_{\text{old}} = P_{\text{old}} + jQ_{\text{old}} = |\mathbf{S}_{\text{old}}|\angle\theta_{\text{old}} \qquad \text{and} \qquad \mathbf{S}_{\text{new}} = P_{\text{old}} + jQ_{\text{new}} = |\mathbf{S}_{\text{new}}|\angle\theta_{\text{new}}$$

Then with the addition of the capacitor,

$$\mathbf{S}_{\text{new}} = \mathbf{S}_{\text{old}} + \mathbf{S}_{\text{cap}}$$

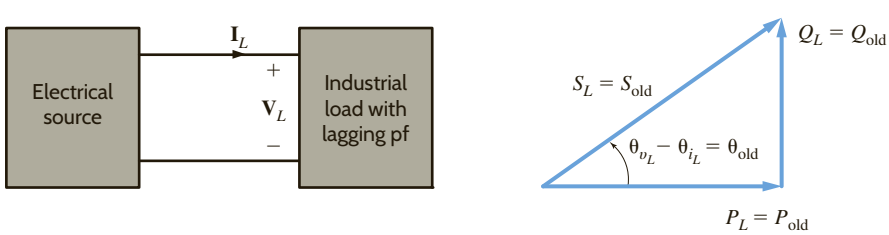

Figure 9.16
Diagram for power factor correction.

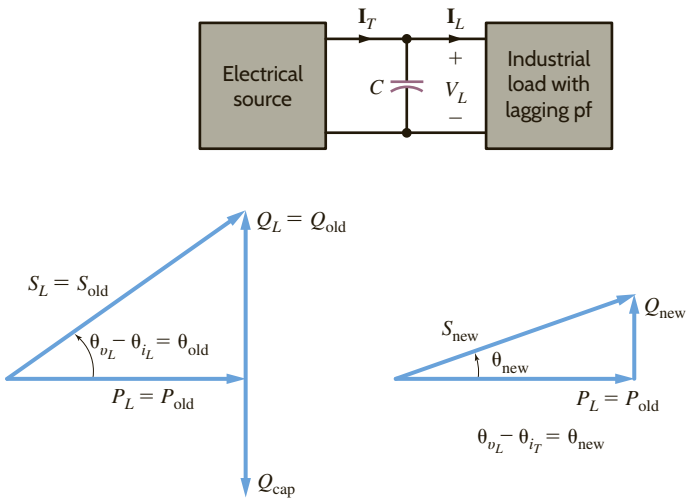

Figure 9.17
Power factor correction diagram including capacitor.

Therefore,

$$\begin{aligned}\mathbf{S}_{\text{cap}} &= \mathbf{S}_{\text{new}} - \mathbf{S}_{\text{old}}\\ &= (P_{\text{new}} - jQ_{\text{new}}) - (P_{\text{old}} + jQ_{\text{old}})\\ &= j(Q_{\text{new}} - Q_{\text{old}})\\ &= j(Q_{\text{cap}})\end{aligned}$$

Recall from Eqs. (9.36) and (9.37) that in general

$$\mathbf{S} = \mathrm{V}_{\text{rms}}^2/\mathbf{Z}^*$$

and for a capacitor

$$\mathbf{Z}^* = -1/j\omega C$$

so that

$$\mathbf{S}_{\text{cap}} = Q_{\text{cap}} = -j\omega C\mathrm{V}_{\text{rms}}^2$$

This equation can be used to find the required value of C in order to achieve the new specified power factor defined by the new power factor angle illustrated in Fig. 9.17.

Hence, we can obtain a particular power factor for the total load (industrial load and capacitor) simply by judiciously selecting a capacitor and placing it in parallel with the original load. In general, we want the power factor to be large, and therefore the power factor angle must be small [i.e., the larger the desired power factor, the smaller the angle $(\theta_{v_L} - \theta_{i_T})$].

EXAMPLE 9.13

Every month our electrical energy provider sends us a bill for the amount of electrical energy that we have consumed. The rate is often expressed in cents per kWh and consists of at least two components: (1) the demand charge, which covers the cost of lines, poles, transformers, and so on, and (2) the energy charge, which covers the cost to produce electric energy at power plants. The energy charge is the subject of the deregulation of the electric utility industry where you, as a customer, choose your energy provider.

It is common for an industrial facility operating at a poor power factor to be charged more by the electric utility providing electrical service. Let's suppose that our industrial facility operates at 277 V rms and requires 500 kW at a power factor of 0.75 lagging. Assume an energy charge of 2¢ per kWh and a demand charge of \$3.50 per kW per month if the power factor is between 0.9 lagging and unity and \$5 per kVA per month if the power factor is less than 0.9 lagging.

The monthly energy charge is 500 × 24 × 30 × \$0.02 = \$7200. Let's calculate the monthly demand charge with the 0.75 lagging power factor. The complex power absorbed by the industrial facility is

$$\mathbf{S}_{\text{old}} = \frac{500}{0.75}\underline{/\cos^{-1}(0.75)} = 666.67\underline{/41.4^\circ} = 500 + j441 \text{ kVA}$$

The monthly demand charge is 666.67 × \$5 = \$3333.35. The total bill from the energy provider is \$7200 + \$3333.35 = \$10,533.35 per month.

Let's consider installing a capacitor bank, as shown in **Fig. 9.18**, to correct the power factor and reduce our demand charge. The demand charge is such that we only need to correct the power factor to 0.9 lagging. The monthly demand charge will be the same whether the power factor is corrected to 0.9 or unity. The complex power absorbed by the industrial facility and capacitor bank will be

$$\mathbf{S}_{\text{new}} = \frac{500}{0.9}\underline{/\cos^{-1}(0.9)} = 555.6\underline{/25.84^\circ} = 500 + j242.2 \text{ kVA}$$

The monthly demand charge for our industrial facility with the capacitor bank is 500 × \$3.50 = \$1750 per month. The average power absorbed by our capacitor bank is negligible compared to the average power absorbed by the industrial facility, so our monthly energy charge remains \$7200 per month. With the capacitor bank installed, the total bill from the energy provider is \$7200 + \$1750 = \$8950 per month.

How many kvars of capacitance do we need to correct the power factor to 0.9 lagging?

$$\mathbf{S}_{\text{new}} - \mathbf{S}_{\text{old}} = \mathbf{S}_{\text{cap}} = (500 + j242.2) - (500 + \text{j}441) = -j198.8 \text{ kvar}$$

Let's assume that it costs \$100 per kvar to install the capacitor bank at the industrial facility for an installation cost of \$19,880. How long will it take to recover the cost of installing the capacitor bank? The difference in the monthly demand charge without the bank and with the bank is \$3333.35 − \$1750 = \$1583.35. Dividing this value into the cost of installing the bank yields \$19,880/\$1583.35 = 12.56 months.

Figure 9.18
A bank of capacitors (Courtesy of Jeremy Nelms, Talquin Electric Cooperative, Inc.).

EXAMPLE 9.14

Plastic kayaks are manufactured using a process called rotomolding, which is diagrammed in **Fig. 9.19**. Molten plastic is injected into a mold, which is then spun on the long axis of the kayak until the plastic cools, resulting in a hollow one-piece craft. Suppose that the induction motors used to spin the molds consume 50 kW at a pf of 0.8 lagging from a $220\underline{/0^\circ}$-V rms, 60-Hz line. We wish to raise the pf to 0.95 lagging by placing a bank of capacitors in parallel with the load.

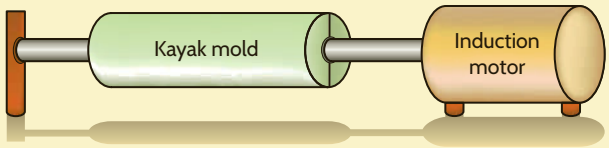

Figure 9.19
Rotomolding manufacturing process.

SOLUTION

The circuit diagram for this problem is shown in **Fig. 9.20**. $P_L = 50$ kW and since $\cos^{-1} 0.8 = 36.87°$, $\theta_{old} = 36.87°$. Therefore,

$$Q_{old} = P_{old} \tan \theta_{old} = (50)(10^3)(0.75) = 37.5 \text{ kvar}$$

Hence,

$$\mathbf{S}_{old} = P_{old} + jQ_{old} = 50{,}000 + j37{,}500$$

and

$$\mathbf{S}_{cap} = 0 + jQ_{cap}$$

Since the required power factor is 0.95,

$$\begin{aligned}\theta_{new} &= \cos^{-1}(\text{pf}_{new}) = \cos^{-1}(0.95)\\ &= 18.19°\end{aligned}$$

Then

$$\begin{aligned}Q_{new} &= P_{old} \tan \theta_{new}\\ &= 50{,}000 \tan (18.19°)\\ &= 16{,}430 \text{ var}\end{aligned}$$

Hence

$$Q_{new} - Q_{old} = Q_{cap} = -\omega C V^2 \text{ rms}$$
$$16{,}430 - 37{,}500 = -\omega C V^2 \text{ rms}$$

Solving the equation for C yields

$$\begin{aligned}C &= \frac{21{,}070}{(377)(220)^2}\\ &= 1155 \ \mu\text{F}\end{aligned}$$

By using a capacitor of this magnitude in parallel with the industrial load, we create, from the utility's perspective, a load pf of 0.95 lagging. However, the parameters of the actual load remain unchanged. Under these conditions, the current supplied by the utility to the kayak manufacturer is less, and therefore they can use smaller conductors for the same amount of power. Or, if the conductor size is fixed, the line losses will be less since these losses are a function of the square of the current.

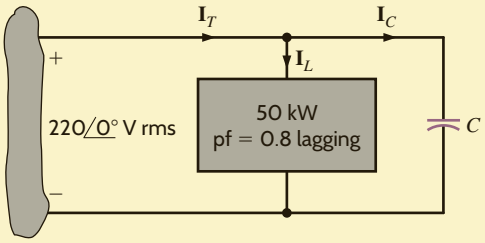

Figure 9.20
Example circuit for power factor correction.

PROBLEM-SOLVING STRATEGY

POWER FACTOR CORRECTION

STEP 1. Find Q_{old} from P_L and θ_{old}, or the equivalent pf_{old}.

STEP 2. Find θ_{new} from the desired pf_{new}.

STEP 3. Determine $Q_{new} = P_{old} \tan \theta_{new}$.

STEP 4. $Q_{new} - Q_{old} = Q_{cap} = -\omega C V^2$ rms.

LEARNING ASSESSMENTS

E9.20 Compute the value of the capacitance necessary to change the power factor in Learning Assessment E9.16 to 0.95 lagging.

ANSWER: $C = 773\ \mu F$.

E9.21 Find the value of capacitance to be connected in parallel with the load in Fig. E9.21 to make the source power factor 0.95 leading, $f = 60$ Hz.

ANSWER: $C = 546.2\ \mu F$.

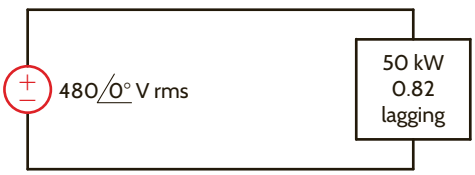

Figure E9.21

9.8 Single-Phase Three-Wire Circuits

The single-phase three-wire ac circuit shown in Fig. 9.21 is an important topic because it is the typical ac power network found in households. Note that the voltage sources are equal; that is, $\mathbf{V}_{an} = \mathbf{V}_{nb} = \mathbf{V}$. Thus, the magnitudes are equal and the phases are equal (single phase). The line-to-line voltage $\mathbf{V}_{ab} = 2\mathbf{V}_{an} = 2\mathbf{V}_{nb} = 2\mathbf{V}$. Within a household, lights and small appliances are connected from one line to *neutral n*, and large appliances such as hot water heaters and air conditioners are connected line to line. Lights operate at about 120 V rms and large appliances operate at approximately 240 V rms.

Let us now attach two identical loads to the single-phase three-wire voltage system using perfect conductors as shown in Fig. 9.21b. From the figure we note that

$$\mathbf{I}_{aA} = \frac{\mathbf{V}}{\mathbf{Z}_L}$$

and

$$\mathbf{I}_{bB} = -\frac{\mathbf{V}}{\mathbf{Z}_L}$$

KCL at point N is

$$\begin{aligned}\mathbf{I}_{nN} &= -(\mathbf{I}_{aA} + \mathbf{I}_{bB}) \\ &= -\left(\frac{\mathbf{V}}{\mathbf{Z}_L} - \frac{\mathbf{V}}{\mathbf{Z}_L}\right) \\ &= 0\end{aligned}$$

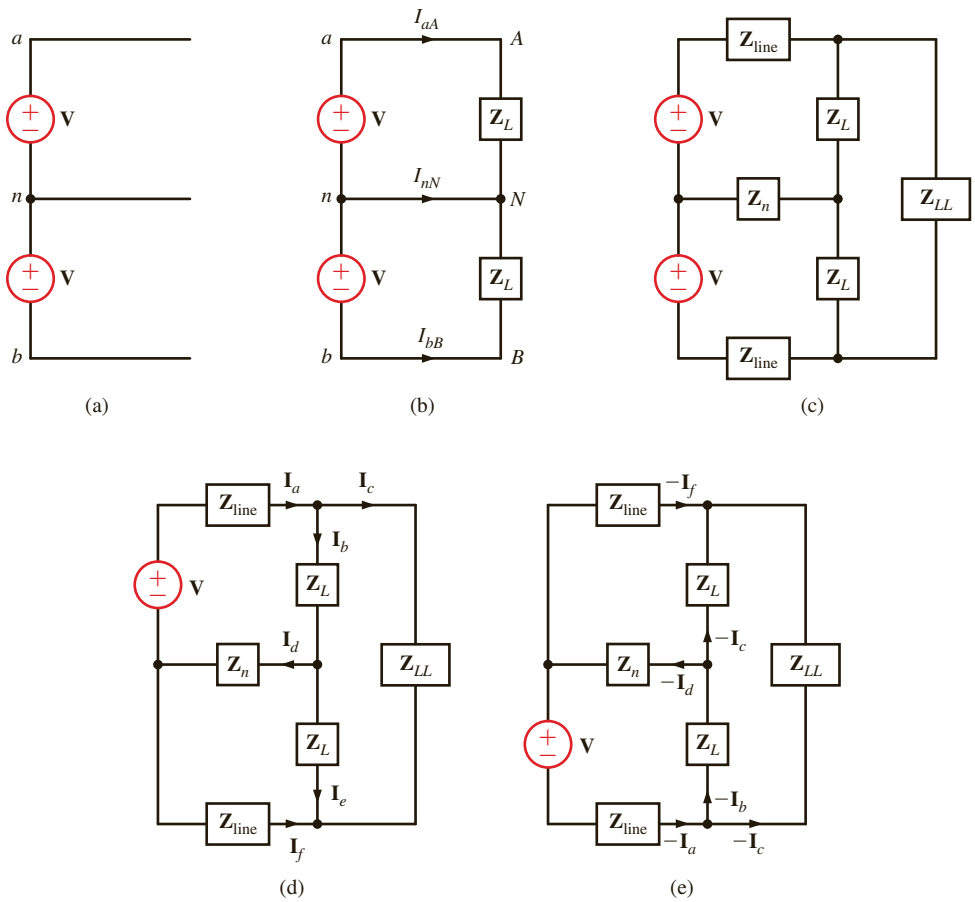

Figure 9.21
Single-phase three-wire system.

Note that there is no current in the neutral wire, and therefore it could be removed without affecting the remainder of the system; that is, all the voltages and currents would be unchanged. One is naturally led to wonder just how far the simplicity exhibited by this system will extend. For example, what would happen if each line had a line impedance, if the neutral conductor had an impedance associated with it, and if there were a load tied from line to line? To explore these questions, consider the circuit in **Fig. 9.21c**. Although we could examine this circuit using many of the techniques we have employed in previous chapters, the symmetry of the network suggests that perhaps superposition may lead us to some conclusions without having to resort to a brute-force assault. Employing superposition, we consider the two circuits in **Figs. 9.21d** and **e**. The currents in Fig. 9.21d are labeled arbitrarily. Because of the symmetrical relationship between Figs. 9.21d and e, the currents in Fig. 9.21e correspond directly to those in Fig. 9.21d. If we add the two *phasor* currents in each branch, we find that the neutral current is again zero. A neutral current of zero is a direct result of the symmetrical nature of the network. If either the line impedances $\mathbf{Z}_{\text{line}}$ or the load impedances $\mathbf{Z}_L$ are unequal, the neutral current will be nonzero. We will make direct use of these concepts when we study three-phase networks in Chapter 11.

EXAMPLE 9.15

A three-wire single-phase household circuit is shown in **Fig. 9.22a**. Use of the lights, stereo, and range for a 24-hour period is demonstrated in **Fig. 9.22b**. Let us calculate the energy use over the 24 hours in kilowatt-hours. Assuming that this represents a typical day and that our utility rate is \$0.08/kWh, let us also estimate the power bill for a 30-day month.

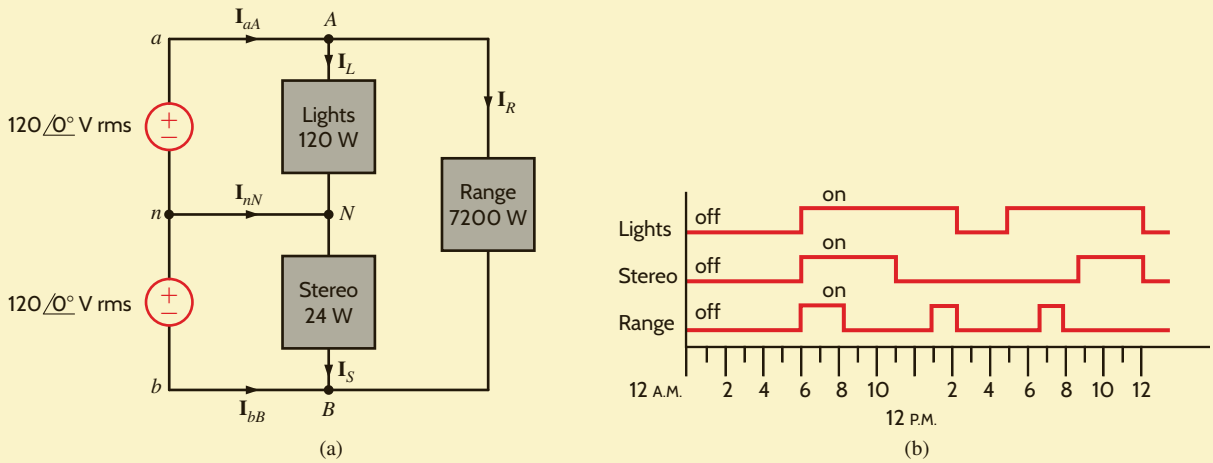

Figure 9.22

Household three-wire network and appliance usage.

SOLUTION Applying nodal analysis to Fig. 9.22a yields

$$\mathbf{I}_{aA} = \mathbf{I}_L + \mathbf{I}_R$$
$$\mathbf{I}_{bB} = -\mathbf{I}_S - \mathbf{I}_R$$
$$\mathbf{I}_{nN} = \mathbf{I}_S - \mathbf{I}_L$$

The current magnitudes for each load can be found from the corresponding power levels as follows:

$$I_L = \frac{P_L}{V_{an}} = \frac{120}{120} = 1 \text{ A rms}$$

$$I_S = \frac{P_S}{V_{nb}} = \frac{24}{120} = 0.2 \text{ A rms}$$

$$I_R = \frac{P_R}{V_{ab}} = \frac{7200}{240} = 30 \text{ A rms}$$

The energy used is simply the integral of the power delivered by the two sources over the 24-hour period. Since the voltage magnitudes are constants, we can express the energy delivered by the sources as

$$E_{an} = V_{an} \int I_{aA}\, dt$$

$$E_{nb} = V_{nb} \int -I_{bB}\, dt$$

The integrals of I_{aA} and I_{bB} can be determined graphically from Fig. 9.22b.

$$\int_{12\text{A.M.}}^{12\text{A.M.}} I_{aA}\, dt = 4I_R + 15I_L = 135$$

$$\int_{12\text{A.M.}}^{12\text{A.M.}} -I_{bB}\, dt = 8I_S + 4I_R = 121.6$$

Therefore, the daily energy for each source and the total energy is

$$E_{an} = 16.2 \text{ kWh}$$
$$E_{nb} = 14.6 \text{ kWh}$$
$$E_{\text{total}} = 30.8 \text{ kWh}$$

Over a 30-day month, a \$0.08/kWh utility rate results in a power bill of

$$\text{Cost} = (30.8)(30)(0.08) = \$73.92$$

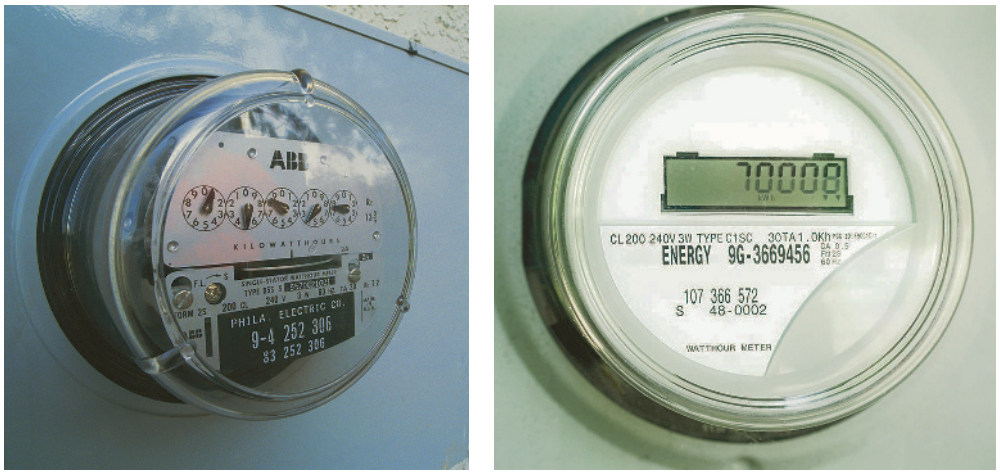

Figure 9.23
Electric meters used to measure home energy consumption (*Left*, Comstock/Punchstock; *right*, Robert Llewllyn/Photolibrary/Getty Images).

The energy consumption is typically measured by meters, of the form shown in **Fig. 9.23**, which are a familiar sight on the outside of our homes.

9.9 Safety Considerations

Although this book is concerned primarily with the theory of circuit analysis, we recognize that, by this point in their study, most students will have begun to relate the theory to the electrical devices and systems that they encounter in the world around them. Thus, it seems advisable to depart briefly from the theoretical and spend some time discussing the very practical and important subject of safety. Electrical safety is a very broad and diverse topic that would require several volumes for a comprehensive treatment. Instead, we will limit our discussion to a few introductory concepts and illustrate them with examples.

It would be difficult to imagine that anyone in our society could have reached adolescence without having experienced some form of electrical shock. Whether that shock was from a harmless electrostatic discharge or from accidental contact with an energized electrical circuit, the response was probably the same—an immediate and involuntary muscular reaction. In either case, the cause of the reaction is current flowing through the body. The severity of the shock depends on several factors, the most important of which are the magnitude, the duration, and the pathway of the current through the body.

The effect of electrical shock varies widely from person to person. **Figure 9.24** shows the general reactions that occur as a result of 60-Hz ac current flow through the body from hand to hand, with the heart in the conduction pathway. Observe that there is an intermediate range of current, from about 0.1 to 0.2 A, which is most likely to be fatal. Current levels in this range are apt to produce ventricular fibrillation, a disruption of the orderly contractions of the heart muscle. Recovery of the heartbeat generally does not occur without immediate medical intervention. Current levels above that fatal range tend to cause the heart muscle to contract severely, and if the shock is removed soon enough, the heart may resume beating on its own.

The voltage required to produce a given current depends on the quality of the contact to the body and the impedance of the body between the points of contact. The electrostatic voltage such as might be produced by sliding across a car seat on a dry winter day may be on the order of 20,000 to 40,000 V, and the current surge on touching the door handle, on the order of 40 A. However, the pathway for the current flow is mainly over the body surface, and its duration is for only a few microseconds. Although that shock could be disastrous for some electronic components, it causes nothing more than mild discomfort and aggravation to a human being.

Electrical appliances found about the home typically require 120 or 240 V rms for operation. Although the voltage level is small compared with that of the electrostatic shock, the potential for harm to the individual and to property is much greater. Accidental contact is more apt to result in current flow either from hand to hand or from hand to foot—either of which will subject the heart to shock. Moreover, the relatively slowly changing (low frequency) 60-Hz current tends to penetrate more deeply into the body as opposed to remaining on the surface as a rapidly changing (high frequency) current would tend to do. In addition, the energy source has the capability of sustaining a current flow without depletion. Thus, subsequent discussion will concentrate primarily on hazards associated with the 60-Hz ac power system.

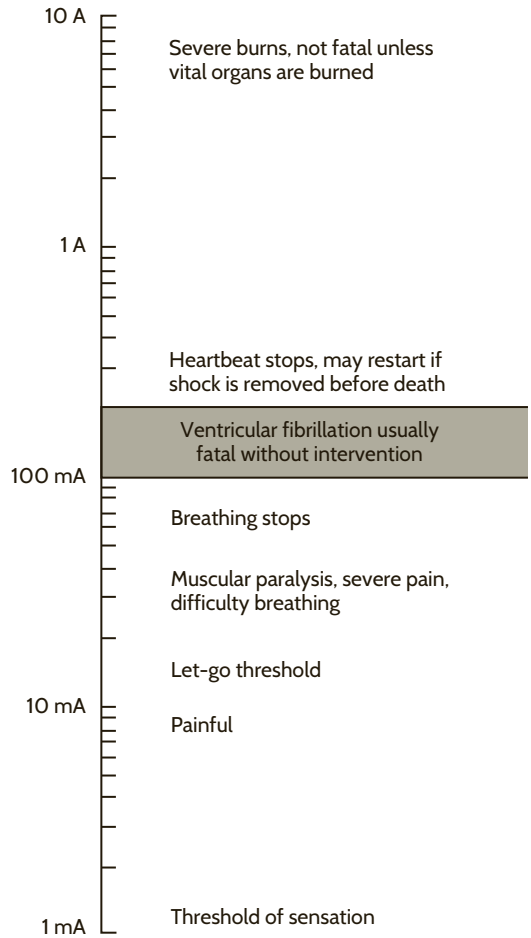

Figure 9.24

Effects of electrical shock (From C. F. Dalziel and W. R. Lee, "Lethal Electric Currents, "*IEEE Spectrum*, February 1969, pp. 44–50; and C. F. Dalziel, "Electric Shock Hazard, "*IEEE Spectrum*, February 1972, pp. 41–50).

The single-phase three-wire system introduced earlier is commonly, though not exclusively, used for electrical power distribution in residences. Two important aspects of this or any system that relate to safety were not mentioned earlier: circuit fusing and grounding.

Each branch circuit, regardless of the type of load it serves, is protected from excessive current flow by circuit breakers or fuses. Receptacle circuits are generally limited to 20 amps and lighting circuits to 15 amps. Clearly, these cannot protect persons from lethal shock. The primary purpose of these current-limiting devices is to protect equipment.

The neutral conductor of the power system is connected to ground (earth) at a multitude of points throughout the system and, in particular, at the service entrance to the residence. The connection to earth may be by way of a driven ground rod or by contact to a cold water pipe of a buried metallic water system. The 120-V branch circuits radiating from the distribution panel (fuse box) generally consist of three conductors rather than only two, as was shown in Fig. 9.21. The third conductor is the ground wire, as shown in **Fig. 9.25**.

The ground conductor may appear to be redundant, since it plays no role in the normal operation of a load that might be connected to the receptacle. Its role is illustrated by the following example.

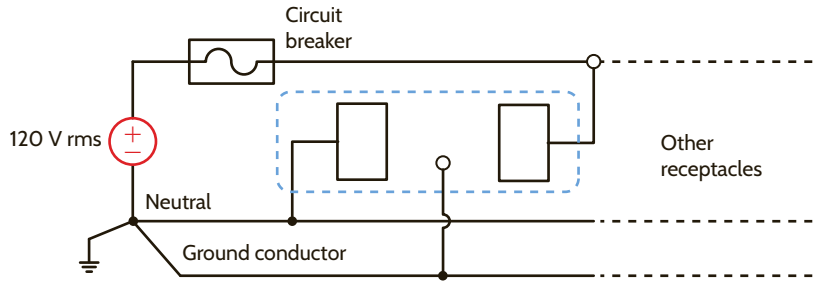

Figure 9.25

A household receptacle.

EXAMPLE 9.16

Joe has a workshop in his basement where he uses a variety of power tools such as drills, saws, and sanders. The basement floor is concrete, and being below ground level, it is usually damp. Damp concrete is a relatively good conductor. Unknown to Joe, the insulation on a wire in his electric drill has been nicked, and the wire is in contact with (or shorted to) the metal case of the drill, as shown in **Fig. 9.26**. Is Joe in any danger when using the drill?

SOLUTION

Without the ground conductor connected to the metal case of the tool, Joe would receive a severe, perhaps fatal, shock when he attempted to use the drill. The voltage between his hand and his feet would be 120 V, and the current through his body would be limited by the resistance of his body and of the concrete floor. Typically, the circuit breakers would not operate. However, if the ground conductor is present and properly connected to the drill case, the case remains at ground potential, the 120-V source becomes shorted to ground, the circuit breaker operates, and Joe lives to drill another hole.

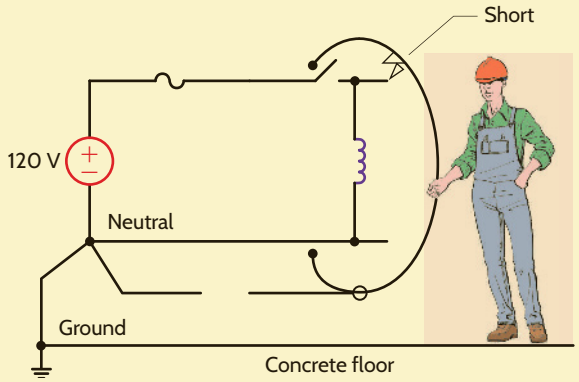

Figure 9.26
Faulty circuit, when the case of the tool is not grounded through the power cord.

It was mentioned earlier that the circuit breaker or fuse cannot provide effective protection against shock. There is, however, a special type of device called a ground-fault interrupter (GFI) that can provide protection for personnel. This device detects current flow outside the normal circuit. Consider the circuit of Fig. 9.26. In the normal safe operating condition, the current in the neutral conductor must be the same as that in the line conductor. If at any time the current in the line does not equal the current in the neutral, then a secondary path has somehow been established, creating an unsafe condition. This secondary path is called a fault. For example, the fault path in Fig. 9.26 is through Joe and the concrete floor. The GFI detects this fault and opens the circuit in response. Its principle of operation is illustrated by the following example.

EXAMPLE 9.17

Let us describe the operation of a GFI.

SOLUTION

Consider the action of the magnetic circuit in **Fig. 9.27**. Under normal operating conditions, i_1 and i_2 are equal, and if the coils in the neutral and line conductors are identical, as we learned in basic physics, the magnetic flux in the core will be zero. Consequently, no voltage will be induced in the sensing coil.

If a fault should occur at the load, current will flow in the ground conductor and perhaps in the earth; thus, i_1 and i_2 will no longer be equal, the magnetic flux will not be zero, and a voltage will be induced in the sensing coil. That voltage can be used to activate a circuit breaker. This is the essence of the GFI device.

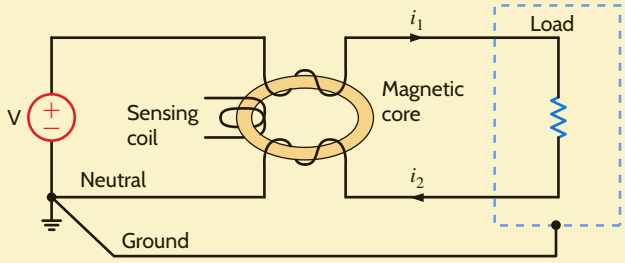

Figure 9.27
Ground-fault interrupter circuit.

Ground-fault interrupters are available in the form of circuit breakers and also as receptacles. They are now required in branch circuits that serve outlets in areas such as bathrooms, basements, garages, and outdoor sites. The devices will operate at ground-fault currents on the order of a few milliamperes. Unfortunately, the GFI is a relatively new device, and electrical code requirements are generally not retroactive. Thus, few older residences have them.

Requirements for the installation and maintenance of electrical systems are meticulously defined by various codes that have been established to provide protection of personnel and property. Installation, alteration, or repair of electrical devices and systems should be undertaken only by qualified persons. The subject matter that we study in circuit analysis does not provide that qualification.

The following examples illustrate the potential hazards that can be encountered in a variety of everyday situations. We begin by revisiting a situation described in a previous example.

EXAMPLE 9.18

Suppose that a man is working on the roof of a mobile home with a hand drill. It is early in the day, the man is barefoot, and dew covers the mobile home. The ground prong on the electrical plug of the drill has been removed. Will the man be shocked if the "hot" electrical line shorts to the case of the drill?

SOLUTION

To analyze this problem, we must construct a model that adequately represents the situation described. In his book *Medical Instrumentation* (Boston: Houghton Mifflin, 1978), John G. Webster suggests the following values for resistance of the human body: $R_{skin}(\text{dry}) = 15\ \text{k}\Omega$, $R_{skin}(\text{wet}) = 150\ \Omega$, $R_{limb}(\text{arm or leg}) = 100\ \Omega$, and $R_{trunk} = 200\ \Omega$.

The network model is shown in **Fig. 9.28**. Note that since the ground line is open-circuited, a closed path exists from the hot wire through the short, the human body, the mobile home, and the ground. For the conditions stated previously, we assume that the surface contact resistances R_{sc_1} and R_{sc_2} are 150 Ω each. The body resistance, R_{body}, consisting of arm, trunk, and leg, is 400 Ω. The mobile home resistance is assumed to be zero, and the ground resistance, R_{gnd}, from the mobile home ground to the actual source ground is assumed to be 1 Ω. Therefore, the magnitude of the current through the body from hand to foot would be

$$\begin{aligned}\mathbf{I}_{body} &= \frac{120}{R_{sc_1} + R_{body} + R_{sc_2} + R_{gnd}} \\ &= \frac{120}{701} \\ &= 171\ \text{mA}\end{aligned}$$

A current of this magnitude can easily cause heart failure.

Additional protection would be provided if the circuit breaker were a ground-fault interrupter.

Figure 9.28
Model for Example 9.18.

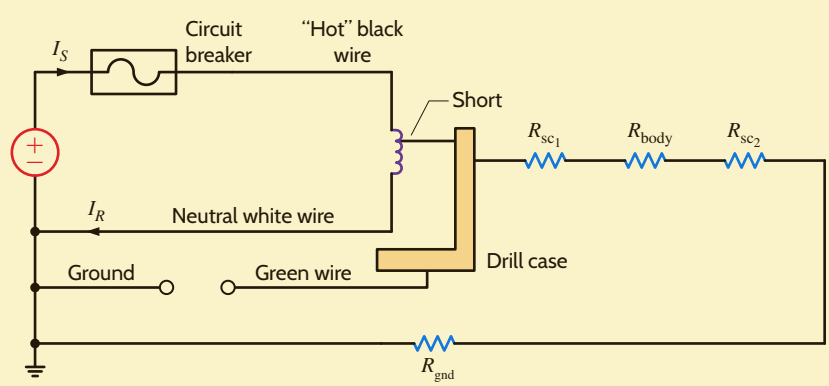

EXAMPLE 9.19

Two boys are playing basketball in their backyard. To cool off, they decide to jump into their pool. The pool has a vinyl lining, so the water is electrically insulated from the earth. Unknown to the boys, there is a ground fault in one of the pool lights. One boy jumps in and while standing in the pool with water up to his chest, reaches up to pull in the other boy, who is holding onto a grounded hand rail, as shown in **Fig. 9.29a**. What is the impact of this action?

SOLUTION

The action in Fig. 9.29a is modeled as shown in **Fig. 9.29b**. Note that since a ground fault has occurred, there exists a current path through the two boys. Assuming that the fault, pool, and railing resistances are approximately zero, the magnitude of the current through the two boys would be

$$\mathbf{I} = \frac{120}{(3R_{\text{arm}}) + 3(3R_{\text{wet contact}}) + R_{\text{trunk}}}$$

$$= \frac{120}{950}$$

$$= 126 \text{ mA}$$

This current level would cause severe shock in both boys. The boy outside the pool could experience heart failure.

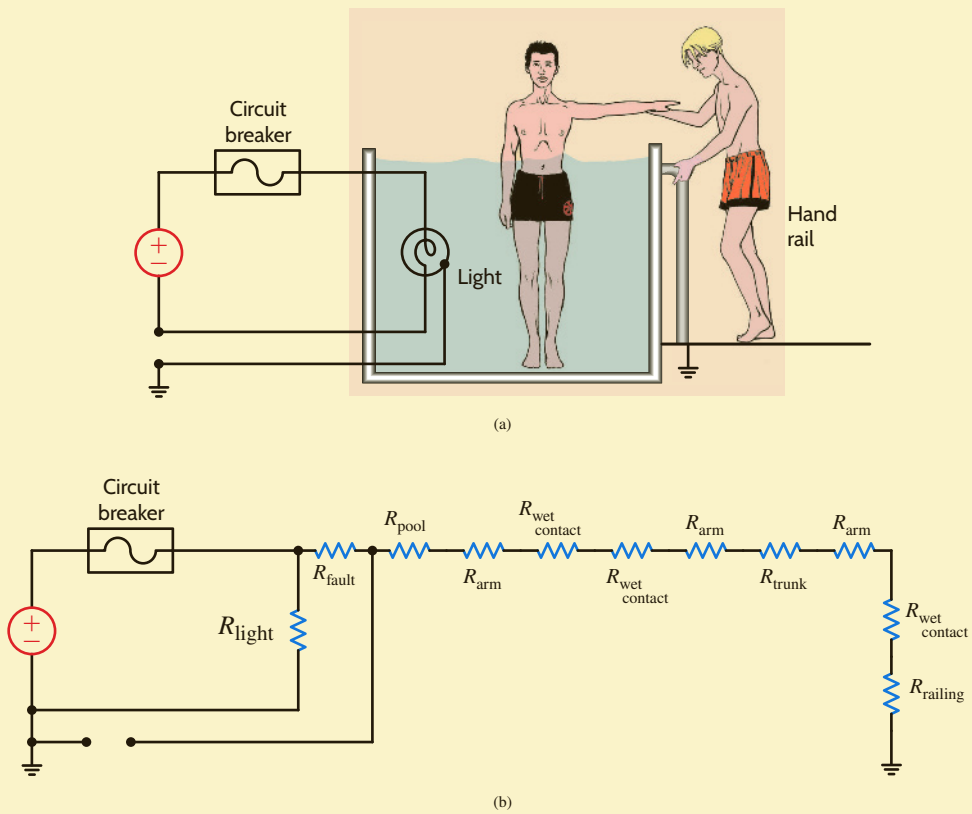

Figure 9.29
Diagrams used in Example 9.19.

EXAMPLE 9.20

A patient in a medical laboratory has a muscle stimulator attached to her left forearm. Her heart rate is being monitored by an EKG machine with two differential electrodes over the heart and the ground electrode attached to her right ankle. This activity is illustrated in **Fig. 9.30a**. The stimulator acts as a current source that drives 150 mA through the muscle from the active electrode to the passive electrode. If the laboratory technician mistakenly decides to connect the passive electrode of the stimulator to the ground electrode of the EKG system to achieve a common ground, is there any risk?

SOLUTION When the passive electrode of the stimulator is connected to the ground electrode of the EKG system, the equivalent network in **Fig. 9.30b** illustrates the two paths for the stimulator current: one through half an arm and the other through half an arm and the body. Using current division, the body current is

$$\mathbf{I}_{\text{body}} = \frac{(150)(10^{-3})(50)}{50 + 50 + 200 + 100}$$
$$= 19 \text{ mA}$$

Therefore, a dangerously high level of current will flow from the stimulator through the body to the EKG ground.

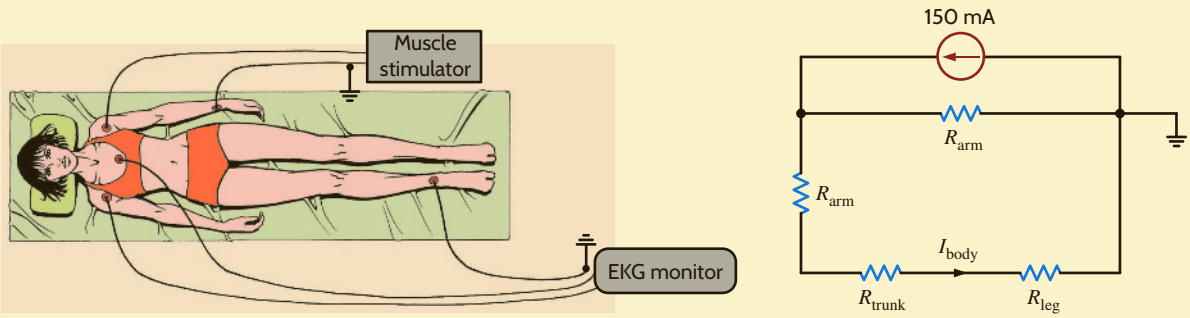

Figure 9.30
Diagrams used in Example 9.20.

EXAMPLE 9.21

A cardiac care patient with a pacing electrode has ignored the hospital rules and is listening to a cheap stereo. The stereo has an amplified 60-Hz hum that is very annoying. The patient decides to dismantle the stereo partially in an attempt to eliminate the hum. In the process, while he is holding one of the speaker wires, the other touches the pacing electrode. What are the risks in this situation?

SOLUTION Let us suppose that the patient's skin is damp and that the 60-Hz voltage across the speaker wires is only 10 mV. Then the circuit model in this case would be as shown in **Fig. 9.31**.

Figure 9.31
Circuit model for Example 9.21.

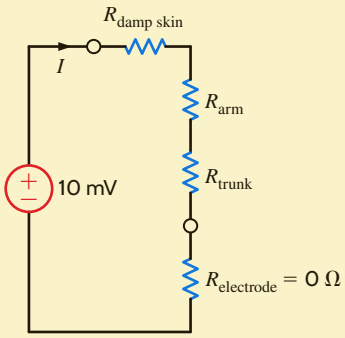

The current through the heart would be

$$I = \frac{(10)(10^{-3})}{150 + 100 + 200}$$
$$= 22.2\ \mu\text{A}$$

It is known that 10 μA delivered directly to the heart is potentially lethal.

EXAMPLE 9.22

While maneuvering in a muddy area, a crane operator accidentally touched a high-voltage line with the boom of the crane, as illustrated in Fig. 9.32a. The line potential was 7200 V. The neutral conductor was grounded at the pole. When the crane operator realized what had happened, he jumped from the crane and ran in the direction of the pole, which was approximately 10 m away. He was electrocuted as he ran. Can we explain this very tragic accident?

SOLUTION

The conditions depicted in Fig. 9.32a can be modeled as shown in Fig. 9.32b. The crane was at 7200 V with respect to earth. Therefore, a gradient of 720 V/m existed along the earth between the crane and the power pole. This earth between the crane and the pole is modeled as a resistance. If the man's stride was about 1 m, the difference in potential between his feet was approximately 720 V. A man standing in the same area with his feet together was unharmed.

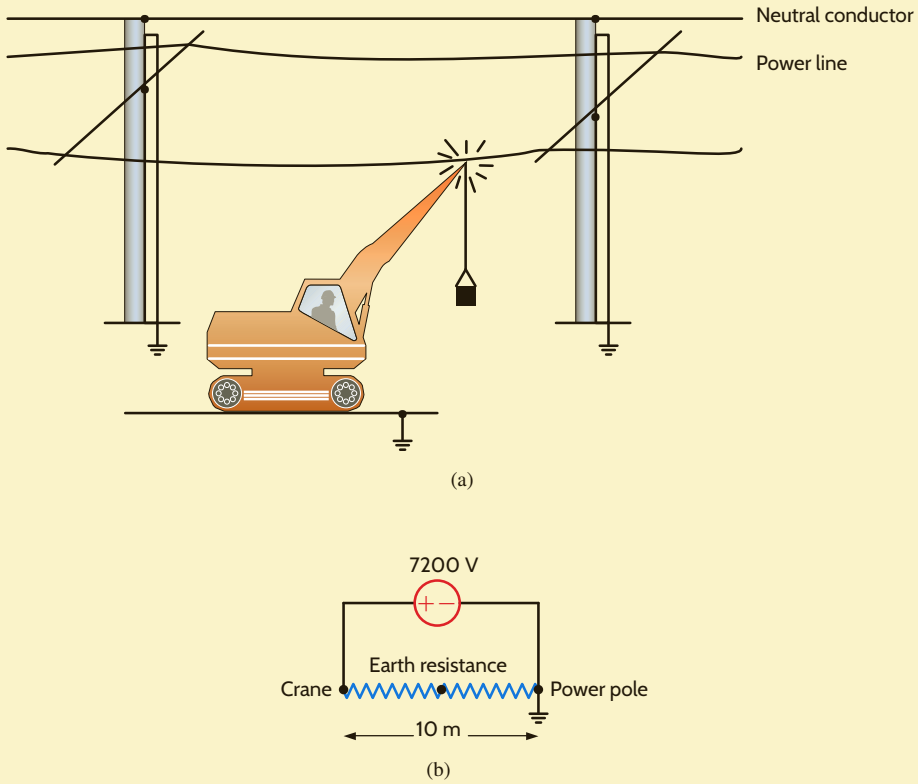

Figure 9.32
Illustrations used in Example 9.22.

The examples of this section have been provided in an attempt to illustrate some of the potential dangers that exist when working or playing around electric power. In the worst case, failure to prevent an electrical accident can result in death. However, even nonlethal electrical contacts can cause such things as burns or falls. Therefore, we must always be alert to ensure not only our own safety, but also that of others who work and play with us.

The following guidelines will help minimize the chances of injury:

1. Avoid working on energized electrical systems.
2. Always assume that an electrical system is energized unless you can absolutely verify that it is not.
3. Never make repairs or alterations that are not in compliance with the provisions of the prevailing code.
4. Do not work on potentially hazardous electrical systems alone.
5. If another person is "frozen" to an energized electrical circuit, deenergize the circuit, if possible. If that cannot be done, use nonconductive material such as dry wooden boards, sticks, belts, and articles of clothing to separate the body from the contact. Act quickly but take care to protect yourself.
6. When handling long metallic equipment, such as ladders, antennas, and so on, outdoors, be continuously aware of overhead power lines and avoid any possibility of contact with them.

HINT
Safety guidelines.

LEARNING ASSESSMENT

E9.22 A woman is driving her car in a violent rainstorm. While she is waiting at an intersection, a power line falls on her car and makes contact. The power line voltage is 7200 V.

(a) Assuming that the resistance of the car is negligible, what is the potential current through her body if, while holding the door handle with a dry hand, she steps out onto the wet ground?

(b) If she remained in the car, what would happen?

ANSWER:

(a) **I** = 463 mA, extremely dangerous;

(b) She should be safe.

Safety when working with electric power must always be a primary consideration. Regardless of how efficient or expedient an electrical network is for a particular application, it is worthless if it is also hazardous to human life.

The safety device shown in **Fig. 9.33**, which is also used for troubleshooting, is a proximity-type sensor that will indicate whether a circuit is energized by simply touching the conductor on the outside of the insulation. This device is typically carried by all electricians and is helpful when working on electric circuits.

In addition to the numerous deaths that occur each year due to electrical accidents, fire damage that results from improper use of electrical wiring and distribution equipment amounts to millions of dollars per year.

To prevent loss of life and damage to property, very detailed procedures and specifications have been established for the construction and operation of electrical systems to ensure their safe operation. The *National Electrical Code* ANSI C1 (ANSI—American National Standards Institute) is the primary guide. There are other codes, however: for example, the National Electric Safety Code, ANSI C2, which deals with safety requirements for public utilities. Underwriters Laboratory (UL) tests all types of devices and systems to ensure that they are safe for use by the general public. We find the UL label on all types of electrical equipment that is used in the home, such as appliances and extension cords.

Electric energy plays a central role in our lives. It is extremely important to our general health and well-being. However, if not properly used, it can be lethal.

Figure 9.33
A modern safety or troubleshooting device (Reproduced with Permission, Fluke Corporation).

SUMMARY

- ***Instantaneous power*** If the current and voltage are sinusoidal functions of time, the instantaneous power is equal to a time-independent average value plus a sinusoidal term that has a frequency twice that of the voltage or current.
- ***Average power*** $P = 1/2\ VI \cos(\theta_v - \theta_i) = 1/2\ VI \cos\theta$, where θ is the phase of the impedance.
- ***Resistive load*** $P = 1/2\ I^2R = 1/2\ VI$ since V and I are in phase.
- ***Reactive load*** $P = 1/2\ VI \cos(\pm 90°) = 0$
- ***Maximum average power transfer*** To obtain the maximum average power transfer to a load, the load impedance should be chosen equal to the complex conjugate of the Thévenin equivalent impedance representing the remainder of the network.
- ***rms or effective value of a periodic waveform*** The effective, or rms, value of a periodic waveform was introduced as a means of measuring the effectiveness of a source in delivering power to a resistive load. The effective value of a periodic waveform is found by determining the root-mean-square value of the waveform. The rms value of a sinusoidal function is equal to the maximum value of the sinusoid divided by $\sqrt{2}$.
- ***Power factor*** Apparent power is defined as the product $V_{rms}I_{rms}$. The power factor is defined as the ratio of the average power to the apparent power and is said to be leading when the phase of the current lags the voltage, and lagging when the phase of the current lags the voltage. The power factor of a load with a lagging power factor can be corrected by placing a capacitor in parallel with the load.
- ***Complex power*** The complex power, **S**, is defined as the product $\mathbf{V}_{rms}\mathbf{I}^*_{rms}$. The complex power **S** can be written as $\mathbf{S} = P + jQ$, where P is the real or average power and Q is the imaginary or quadrature power.

$$\mathbf{S} = I^2\mathbf{Z} = I^2R + jI^2X$$

- ***The single-phase three-wire circuit*** The single-phase three-wire circuit is the one commonly used in households. Large appliances are connected line to line and small appliances and lights are connected line to neutral.
- ***Safety*** Safety must be a primary concern in the design and use of any electrical circuit. The National Electric Code is the primary guide for the construction and operation of electrical systems.

PROBLEMS

9.1 The voltage and current at the input of a circuit are given by the expressions

$$v(t) = 170 \cos(\omega t + 30°)\ \text{V}$$
$$i(t) = 5 \cos(\omega t + 45°)\ \text{A}$$

Determine the average power absorbed by the circuit.

9.2 The voltage and current at the input of a network are given by the expressions

$$v(t) = 6 \cos \omega t\ \text{V}$$
$$i(t) = 4 \sin \omega t\ \text{A}$$

Determine the average power absorbed by the network.

9.3 Determine the equations for the voltage and the instantaneous power in the network in Fig. P9.3.

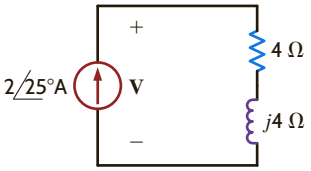

Figure P9.3

9.4 Determine the equations for the current and the instantaneous power in the network in Fig. P9.4.

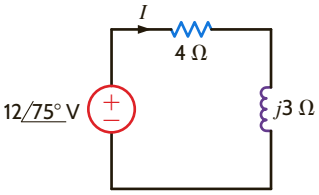

Figure P9.4

9.5 Determine the instantaneous power supplied by the source in the circuit in Fig. P9.5.

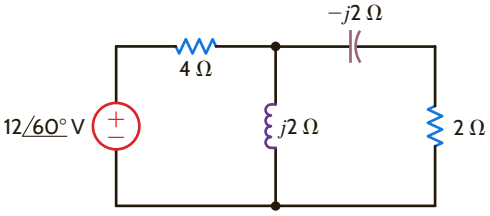

Figure P9.5

9.6 Find the expression for the instantaneous power supplied by the source in the network in Fig. P9.6.

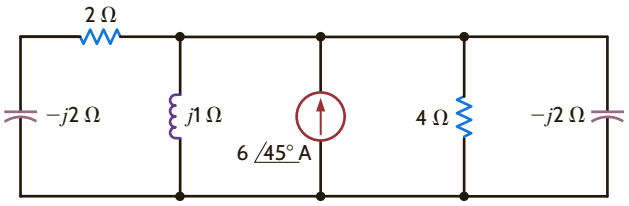

Figure P9.6

9.7 Given $v_s(t) = 100 \cos 100t$ volts, find the average power supplied by the source and the current $i_2(t)$ in the network in Fig. P9.7.

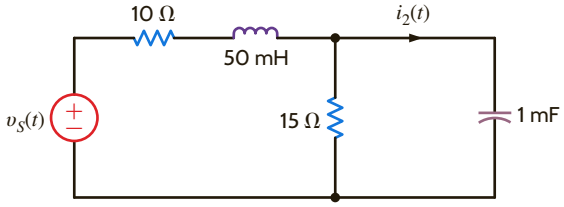

Figure P9.7

9.8 Compute the average power absorbed by each of the elements to the right of the dashed line in the circuit shown in Fig. P9.8.

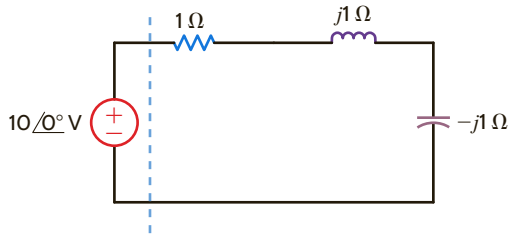

Figure P9.8

9.9 Given the network in Fig. P9.9, find the power supplied and the average power absorbed by each element.

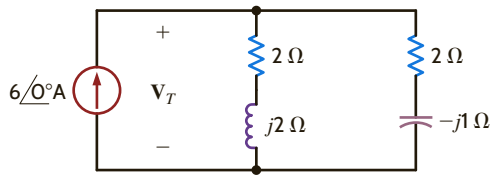

Figure P9.9

9.10 Calculate the power absorbed by each element in the circuit in Fig. P9.10.

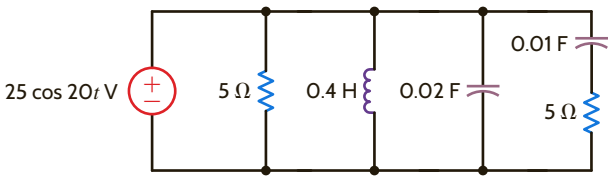

Figure P9.10

9.11 Given the network in Fig. P9.11, determine which elements are supplying power, which ones are absorbing power, and how much power is being supplied and absorbed.

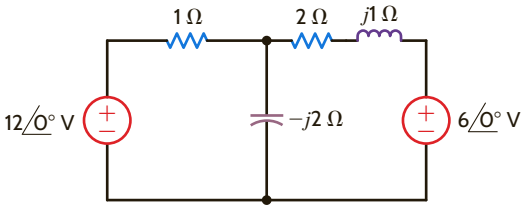

Figure P9.11

9.12 Determine the average power supplied by each source in the network shown in Fig. P9.12.

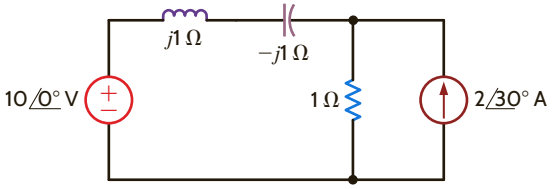

Figure P9.12

9.13 Given the circuit in Fig. P9.13, determine the amount of average power supplied to the network.

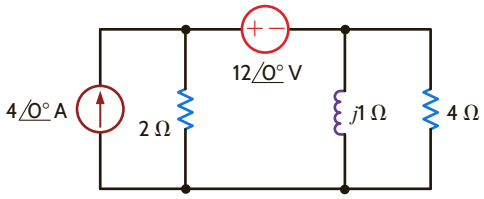

Figure P9.13

9.14 Determine the average power absorbed by the 4-Ω resistor in the network shown in Fig. P9.14.

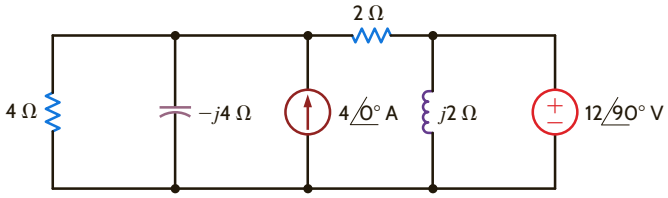

Figure P9.14

9.15 Find the average power absorbed by the network in Fig. P9.15.

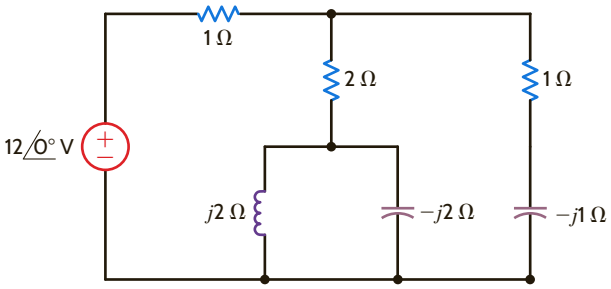

Figure P9.15

9.16 Find the average power absorbed by the resistor in the circuit shown in Fig. P9.16 if

$$v_1(t) = 10 \cos (377t + 60°) \text{ V and}$$
$$v_2(t) = 20 \cos (377t + 120°) \text{ V.}$$

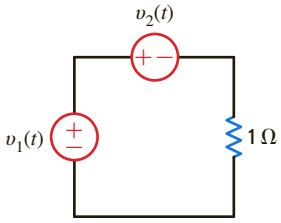

Figure P9.16

9.17 If $i_g(t) = 0.5 \cos 2000t$ A, find the average power absorbed by each element in the circuit in Fig. P9.17.

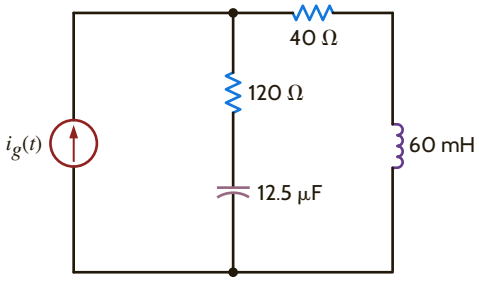

Figure P9.17

9.18 Find the average power absorbed by the network shown in Fig. P9.18.

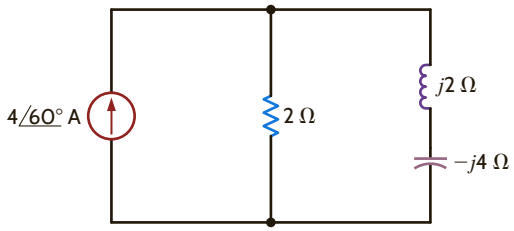

Figure P9.18

9.19 Given the network in Fig. P9.19, find the power supplied and the average power absorbed by each element.

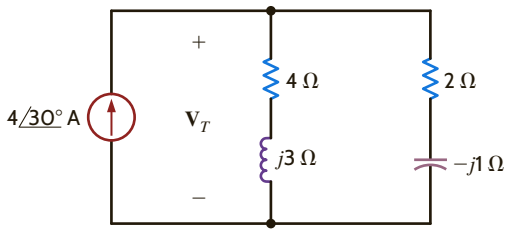

Figure P9.19

9.20 Given the network in Fig. P9.20, show that the power supplied by the sources is equal to the power absorbed by the passive elements.

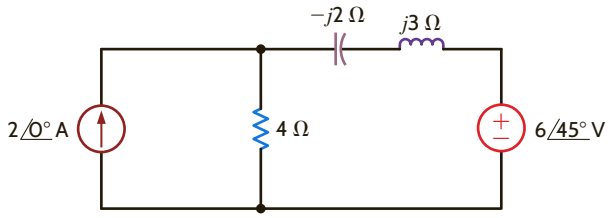

Figure P9.20

9.21 Calculate the average power absorbed by the 1-Ω resistor in the network shown in Fig. P9.21.

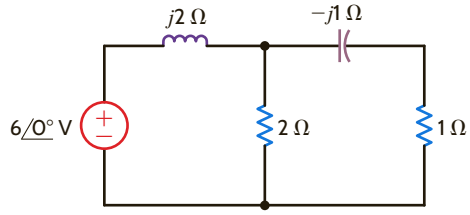

Figure P9.21

9.22 Find the average power supplied by the current source in the network in Fig. P9.22.

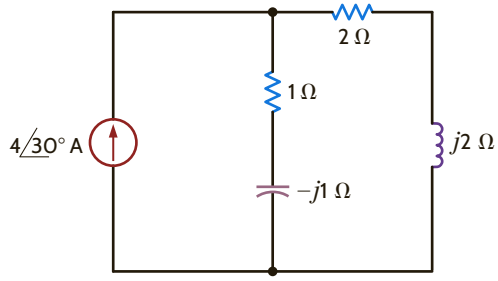

Figure P9.22

9.23 Find the total average power supplied and the average power absorbed by each element in the network in Fig. P9.23.

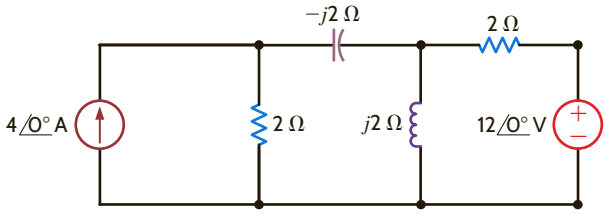

Figure P9.23

9.24 Determine the average power supplied by each source in the network shown in Fig. P9.24.

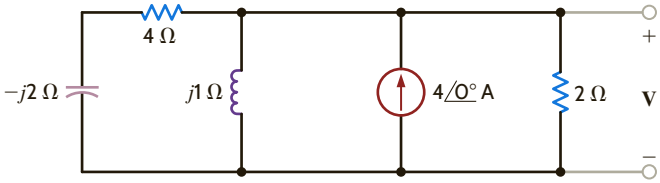

Figure P9.24

9.25 Given the network in Fig. P9.25, find the average power supplied to the circuit.

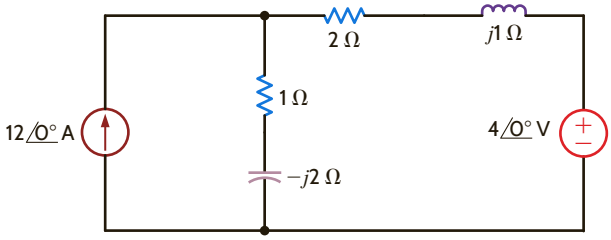

Figure P9.25

9.26 Determine the average power absorbed by the 4-Ω resistor in the network shown in Fig. P9.26.

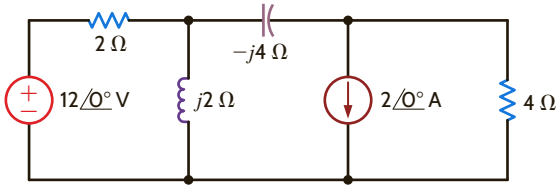

Figure P9.26

9.27 Given the network in Fig. P9.27, find the average power supplied and the total average power absorbed.

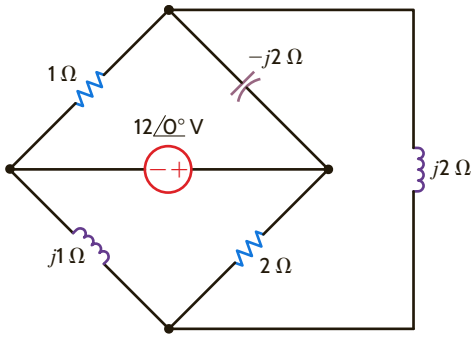

Figure P9.27

9.28 Determine the average power supplied to the network in Fig. P9.28.

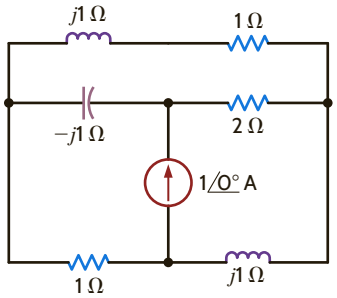

Figure P9.28

9.29 Determine the average power absorbed by a 2-Ω resistor connected at the output terminals of the network shown in Fig. P9.29.

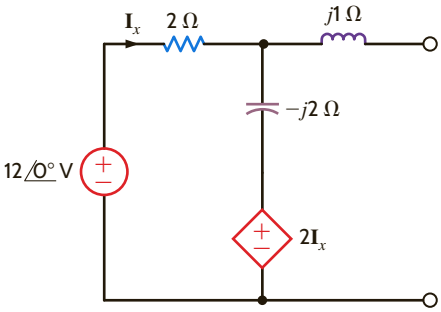

Figure P9.29

9.30 Find the average power absorbed by the 2-Ω resistor in the circuit shown in Fig. P9.30.

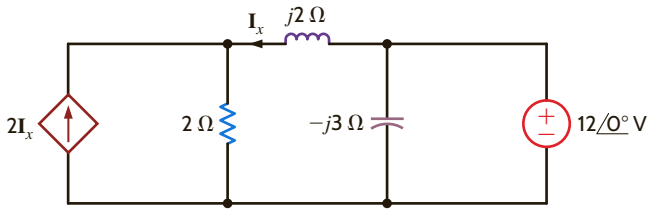

Figure P9.30

9.31 Determine the impedance $\mathbf{Z}_L$ for maximum average power transfer and the value of the maximum power transferred to $\mathbf{Z}_L$ for the circuit shown in Fig. P9.31.

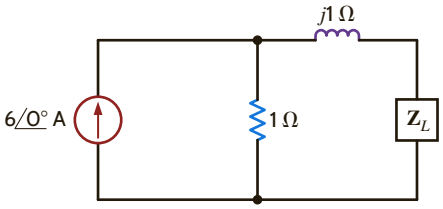

Figure P9.31

9.32 Determine the impedance $\mathbf{Z}_L$ for maximum average power transfer and the value of the maximum average power transferred to $\mathbf{Z}_L$ for the circuit shown in Fig. P9.32.

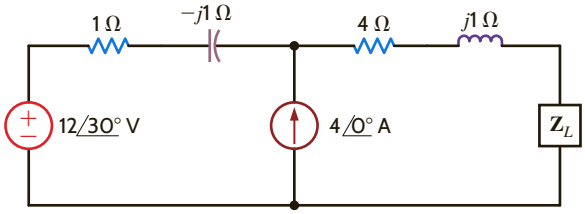

Figure P9.32

9.33 Determine the impedance $\mathbf{Z}_L$ for maximum average power transfer and the value of the maximum average power transferred to $\mathbf{Z}_L$ for the circuit shown in Fig. P9.33.

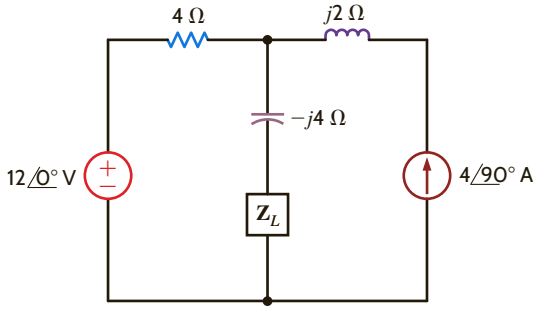

Figure P9.33

9.34 Determine the impedance $\mathbf{Z}_L$ for maximum average power transfer and the value of the maximum average power absorbed by the load in the network shown in Fig. P9.34.

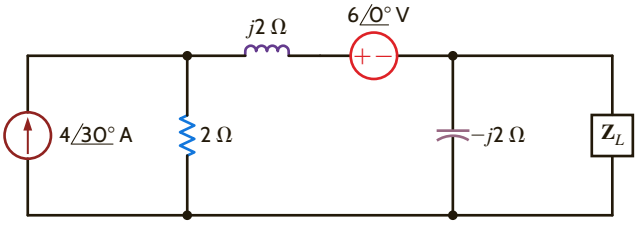

Figure P9.34

9.35 Determine the impedance $\mathbf{Z}_L$ for maximum average power transfer and the value of the maximum average power transferred to $\mathbf{Z}_L$ for the circuit shown in Fig. P9.35.

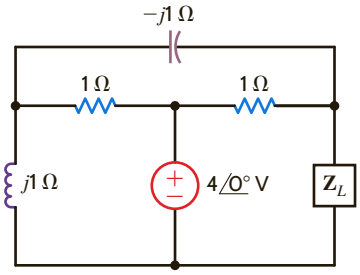

Figure P9.35

9.36 In the network in Fig. P9.36, find $\mathbf{Z}_L$ for maximum average power transfer and the maximum average power transferred.

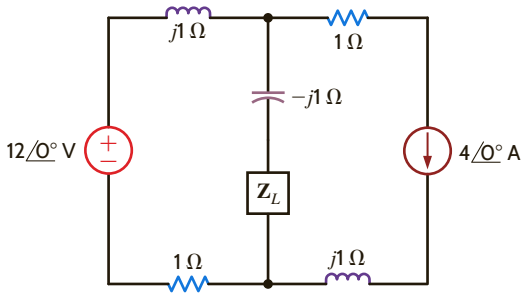

Figure P9.36

9.37 Determine the impedance $\mathbf{Z}_L$ for maximum average power transfer and the value of the maximum average power absorbed by the load in the network shown in Fig. P9.37.

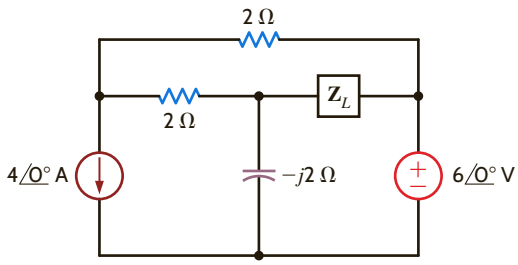

Figure P9.37

9.38 Find the impedance $\mathbf{Z}_L$ for maximum average power transfer and the value of the maximum average power transferred to $\mathbf{Z}_L$ for the circuit shown in Fig. P9.38.

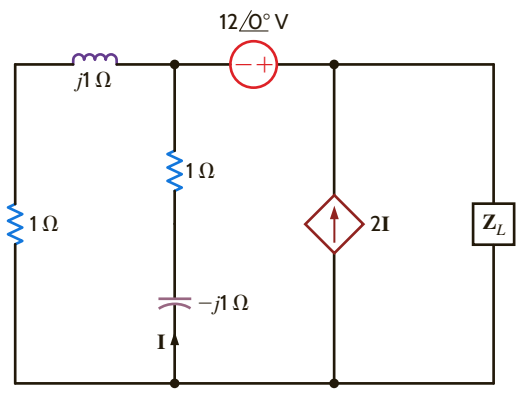

Figure P9.38

9.39 Repeat Problem 9.38 for the network in Fig. P9.39.

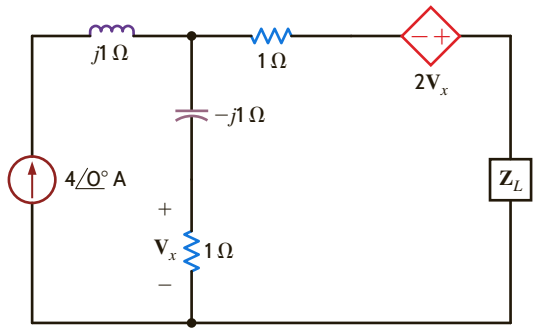

Figure P9.39

9.40 Determine the impedance $\mathbf{Z}_L$ for maximum average power transfer and the value of the maximum average power absorbed by the load in the network shown in Fig. P9.40.

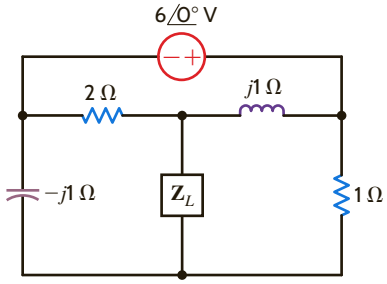

Figure P9.40

9.41 Find the value of $\mathbf{Z}_L$ in Fig. P9.41 for maximum average power transfer to the load.

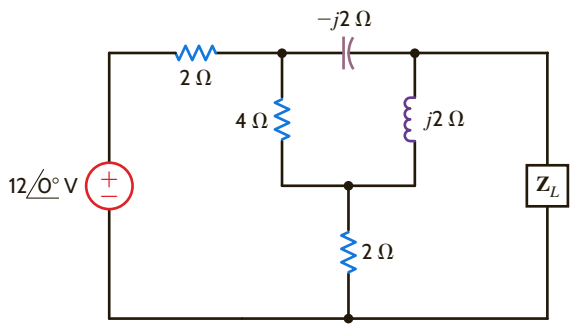

Figure P9.41

9.42 Find the value of $\mathbf{Z}_L$ in Fig. P9.42 for maximum average power transfer to the load.

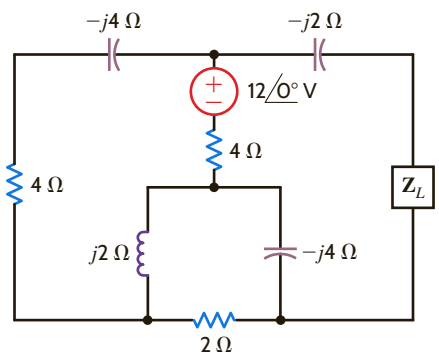

Figure P9.42

9.43 In the network in Fig. P9.43, find $\mathbf{Z}_L$ for maximum average power transfer and the maximum average power transferred.

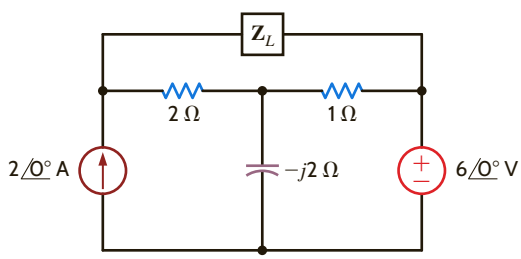

Figure P9.43

9.44 Find the value of $\mathbf{Z}_L$ in Fig. P9.44 for maximum average power transfer to the load.

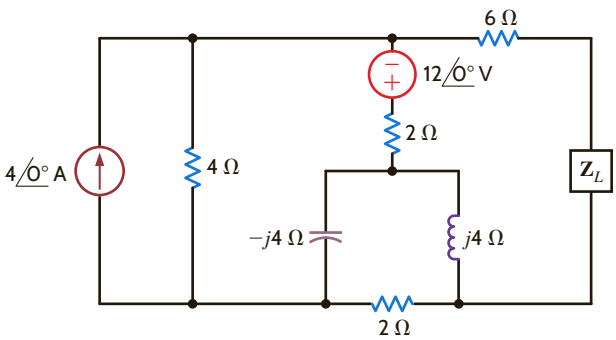

Figure P9.44

9.45 Determine the impedance $\mathbf{Z}_L$ for maximum average power transfer and the value of the maximum average power absorbed by the load in the network shown in Fig. P9.45.

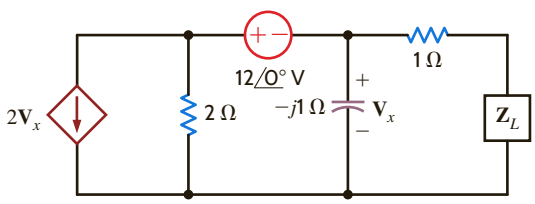

Figure P9.45

9.46 Find the value of $\mathbf{Z}_L$ in the circuit in Fig. P9.46 for maximum average power transfer.

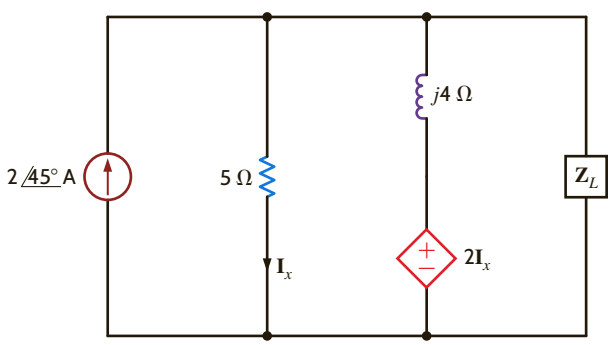

Figure P9.46

9.47 Determine the impedance $\mathbf{Z}_L$ for maximum average power transfer and the value of the maximum average power absorbed by the load in the network shown in Fig. P9.47.

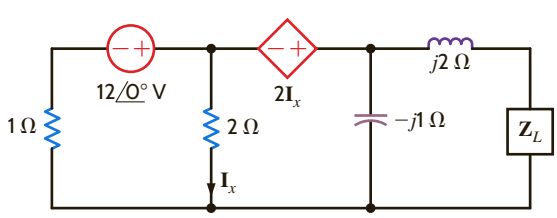

Figure P9.47

9.48 Calculate the rms value of the waveform shown in Fig. P9.48.

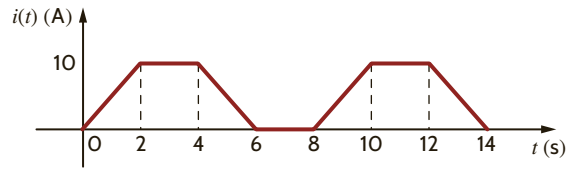

Figure P9.48

9.49 Calculate the rms value of the waveform shown in Fig. P9.49.

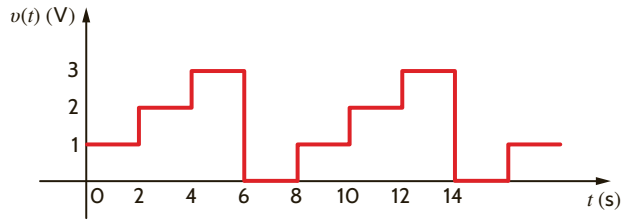

Figure P9.49

9.50 Calculate the rms value of the waveform in Fig. P9.50.

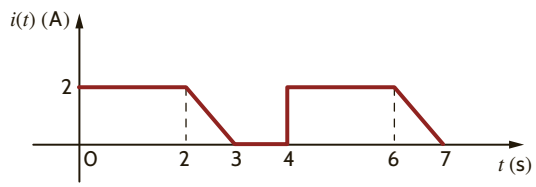

Figure P9.50

9.51 Calculate the rms value of the waveform shown in Fig. P9.51.

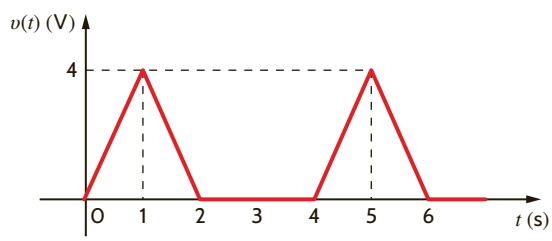

Figure P9.51

9.52 The current waveform in Fig. P9.52 is flowing through a 5-Ω resistor. Find the average power absorbed by the resistor.

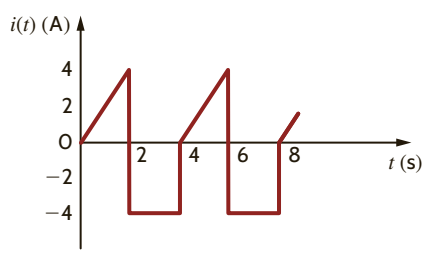

Figure P9.52

9.53 Calculate the rms value of the waveform shown in Fig. P9.53.

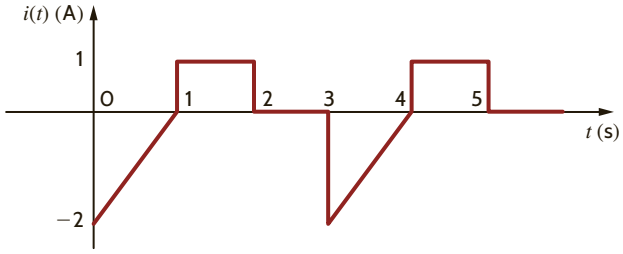

Figure P9.53

9.54 Calculate the rms value of the waveform in Fig. P9.54.

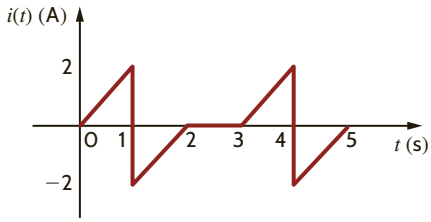

Figure P9.54

9.55 Find the rms value of the voltage defined by the expression

$$v(t) = \cos t + \cos(t + 120°)\ \text{V}$$

9.56 Compute the rms value of the voltage given by the waveform shown in Fig. P9.56.

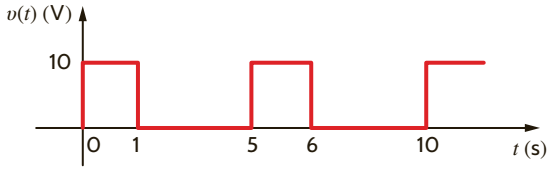

Figure P9.56

9.57 Calculate the rms value of the periodic current waveform shown in Fig. P9.57.

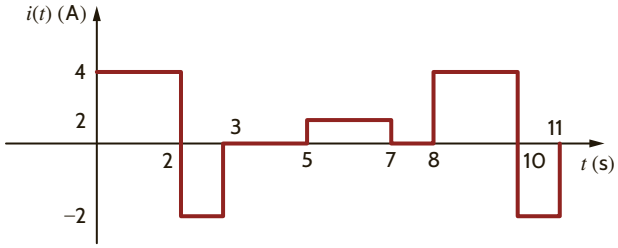

Figure P9.57

9.58 Calculate the rms value of the waveform in Fig. P9.58.

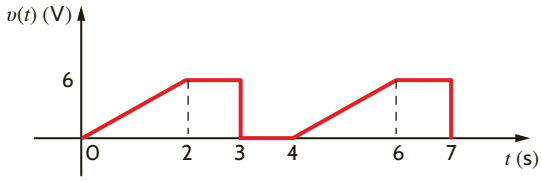

Figure P9.58

9.59 Find the rms value of the waveform shown in Fig. P9.59.

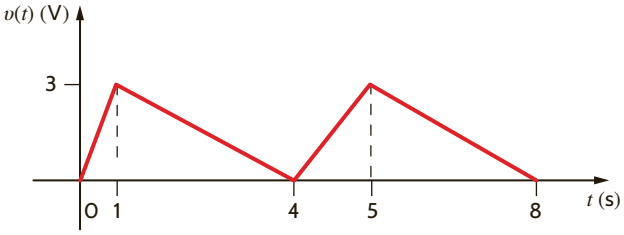

Figure P9.59

9.60 Determine the average power absorbed by a 4-Ω resistor when the current in it is given by the waveform shown in Fig. P9.60.

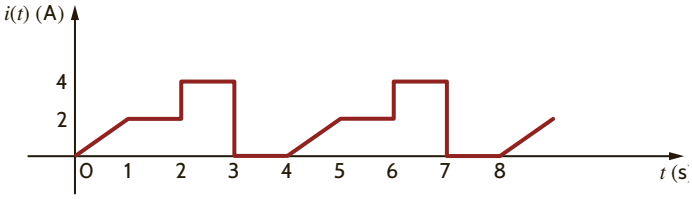

Figure P9.60

9.61 Find the average power delivered to a 12-Ω resistor if the current in it is given by the waveform shown in Fig. P9.61.

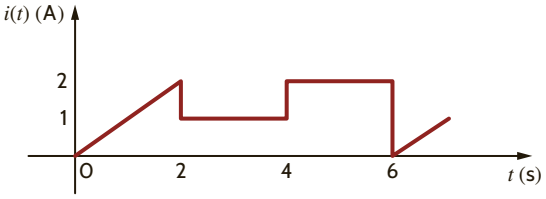

Figure P9.61

9.62 Find the average power absorbed by the network in Fig. P9.62a if the output of the current source is shown in Fig. P9.62b.

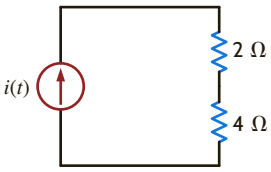

(a)

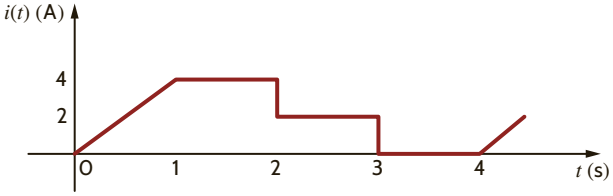

(b)

Figure P9.62

9.63 Find the average power absorbed by the network in Fig. P9.63a if the output of the current source is shown in Fig. P9.63b.

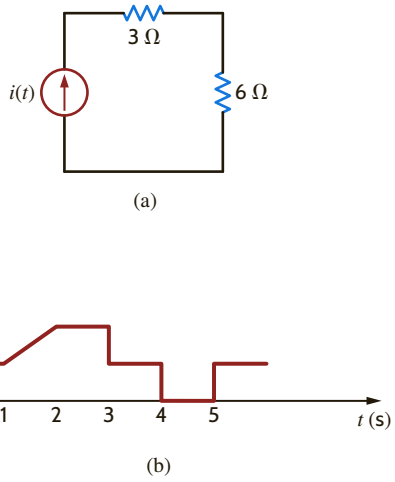

Figure P9.63

9.64 Find the average power absorbed by the network in Fig. P9.64a if the output of the current source is shown in Fig. P9.64b.

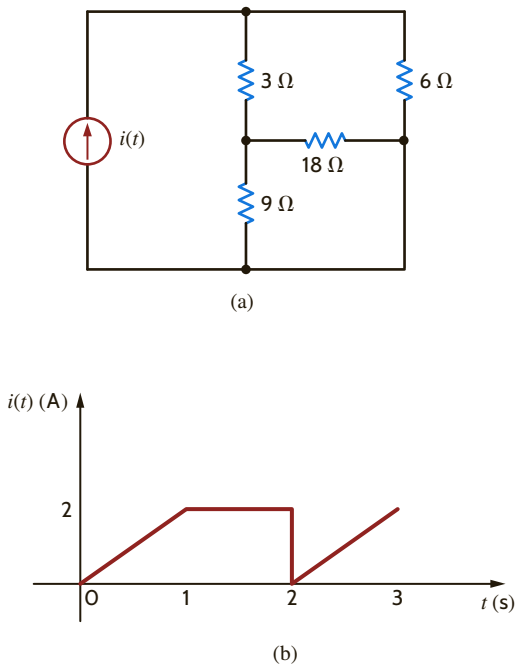

Figure P9.64

9.65 A plant consumes 100 kW of power at 0.9 pf lagging. If the load current is 200 A rms, find the load voltage.

9.66 A plant draws 250 A rms from a 240-V rms line to supply a load with 50 kW. What is the power factor of the load?

9.67 A transmission line with impedance of $0.08 + j0.25\ \Omega$ is used to deliver power to a load. The load is inductive, and the load voltage is $220\angle 0°$ V rms at 60 Hz. If the load requires 12 kW and the real power loss in the line is 560 W, determine the power factor angle of the load.

9.68 The power company supplies 80 kW to an industrial load. The load draws 220 A rms from the transmission line. If the load voltage is 440 V rms and the load power factor is 0.8 lagging, find the losses in the transmission line.

9.69 An industrial load that consumes 40 kW is supplied by the power company, through a transmission line with 0.1-Ω resistance, with 44 kW. If the voltage at the load is 240 V rms, find the power factor at the load.

9.70 An industrial load operates at 30 kW, 0.8 pf lagging. The load voltage is $240\angle 0°$ V rms. The real and reactive power losses in the transmission-line feeder are 1.8 kW and 2.4 kvar, respectively. Find the impedance of the transmission line and the input voltage to the line.

9.71 Compute the rms value of the waveform in Fig. P9.71.

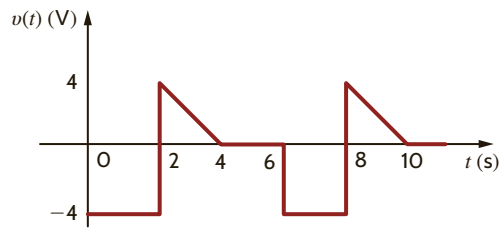

Figure P9.71

9.72 An industrial load consumes 100 kW at 0.8 pf lagging. If an ammeter in the transmission line indicates that the load current is 200 A rms, find the load voltage.

9.73 The industrial load in Fig. P9.73 is known to be inductive and consumes 90 kW. The ammeter reading is 260 A rms, and the voltmeter reading is 480 V rms. Determine the power factor of the load.

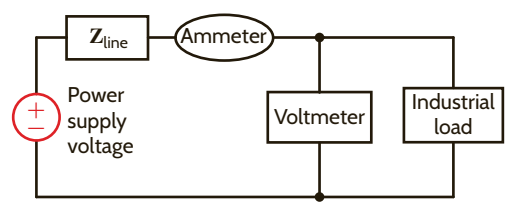

Figure P9.73

9.74 The industrial load in Fig. P9.73 consumes 110 kW at 0.88 of lagging. The ammeter reads 252 A rms. Determine the voltmeter reading.

9.75 A plant consumes 20 kW of power from a 240-V rms line. If the load power factor is 0.9 lagging, what is the angle by which the load voltage leads the load current? What is the load current phasor if the line voltage has a phasor of $240\angle 0°$ V rms?

9.76 The power company must generate 100 kW to supply an industrial load with 94 kW through a transmission line with 0.09-Ω resistance. If the load power factor is 0.83 lagging, find the load voltage.

9.77 The power company supplies 40 kW to an industrial load. The load draws 200 A rms from the transmission line. If the load voltage is 240 V rms and the load power factor is 0.8 lagging, find the losses in the transmission line.

9.78 A transmission line with impedance $0.1 + j0.2\ \Omega$ is used to deliver power to a load. The load is capacitive and the load voltage is $240\angle 0°$ V rms at 60 Hz. If the load requires 15 kW and the real power loss in the line is 660 W, determine the input voltage to the line.

9.79 Determine the real power, the reactive power, the complex power, and the power factor for a load having the following characteristics.

(a) $\mathbf{I} = 2\angle 40°$ A rms, $\mathbf{V} = 450\angle 70°$ V rms.

(b) $\mathbf{I} = 1.5\angle -20°$ A rms, $\mathbf{Z} = 5000\angle 15°\ \Omega$.

(c) $\mathbf{V} = 200\angle +35°$ V rms, $\mathbf{Z} = 1500\angle -15°\ \Omega$.

9.80 Find the real and reactive power absorbed by each element in the circuit in Fig. P9.80.

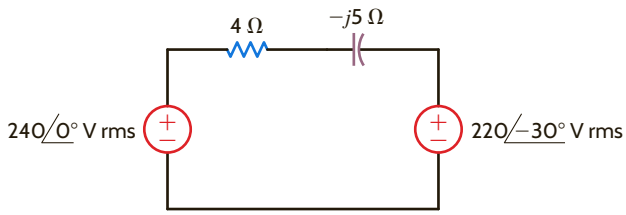

Figure P9.80

9.81 In the circuit in Fig. P9.81, the complex power supplied by source $\mathbf{S}_1$ is $2000\angle -30°$ VA. If $\mathbf{V}_1 = 200\angle 10°$ V rms, find $\mathbf{V}_2$.

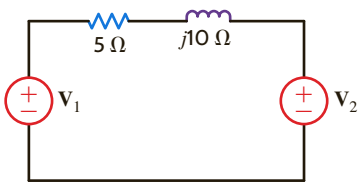

Figure P9.81

9.82 The load in the diagram in Fig. P9.82 may be modeled by two elements connected in parallel—either a resistor and an inductor or a resistor and a capacitor. Determine which model is appropriate for this load and determine values for R and either L or C if $f = 60$ Hz and the source supplies 12 kW at a $pf = 0.8$ leading.

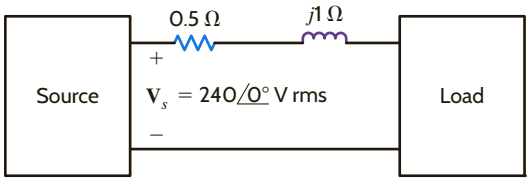

Figure P9.82

9.83 For the network in Fig. P9.83, the complex power absorbed by the source on the right is $0 + j1582.5$ VA. Find the value of R and the unknown element and its value if $f = 60$ Hz. (If the element is a capacitor, give its capacitance; if the element is an inductor, give its inductance.)

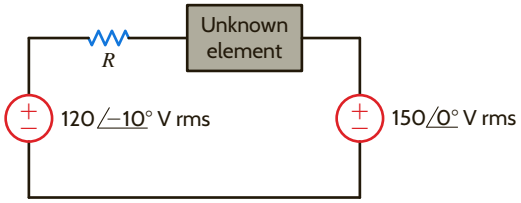

Figure P9.83

9.84 Find the real and reactive power absorbed by each element in the circuit in Fig. P9.84.

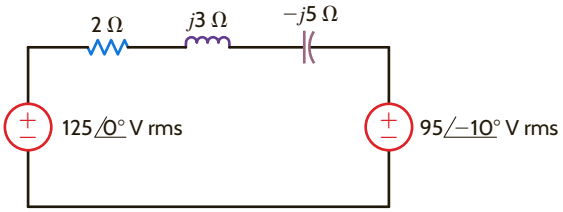

Figure P9.84

9.85 Given the circuit in Fig. P9.85, find the power factor at the source and $v_s(t)$ if $f = 60$ Hz.

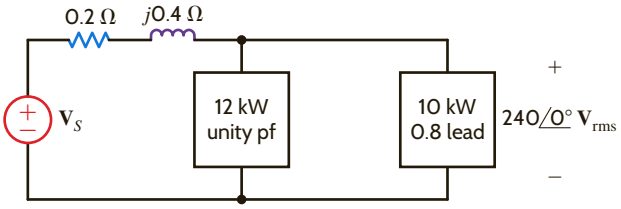

Figure P9.85

9.86 Given the diagram in Fig. P9.86, the source supplies 12 kW at a power factor of 0.8 lagging. Determine the complex power absorbed by the load if $\mathbf{V}_S = 240\angle 0°$ V rms.

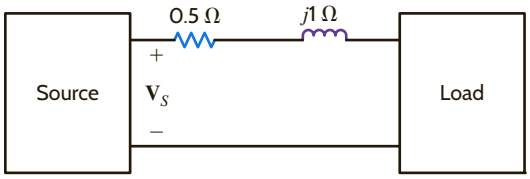

Figure P9.86

9.87 Two industrial loads are supplied by a source through a transmission line with an impedance of $\mathbf{Z}_L = 0.1 + j0.2\ \Omega$.

Load 1: 44 kW at 0.82 pf lagging
Load 2: 64 kW at 0.92 pf lagging

If the voltage at the loads is $240\angle 0°$ Vrms. Determine the power factor of the source.

9.88 Use Kirchhoff's laws to compute the source voltage of the network shown in Fig. P9.88.

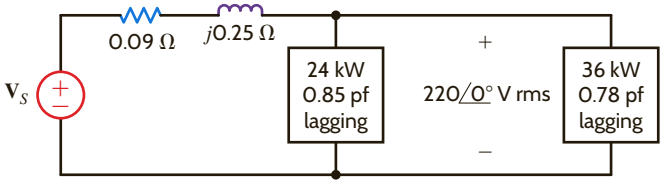

Figure P9.88

9.89 Given the network in Fig. P9.89, determine the input voltage $\mathbf{V}_S$.

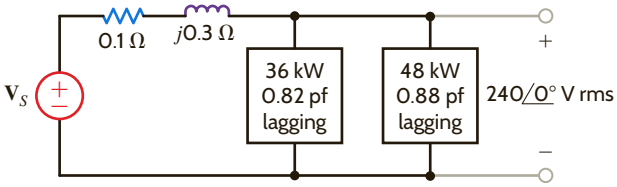

Figure P9.89

9.90 Given the network in Fig. P9.90, determine the input voltage $\mathbf{V}_S$.

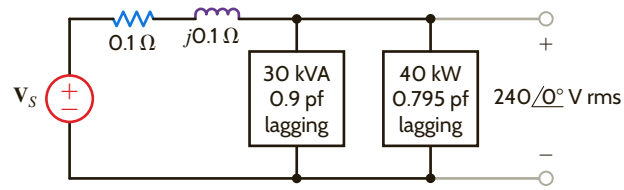

Figure P9.90

9.91 Given the network in Fig. P9.91, find the complex power supplied by the source, the power factor of the source, and the voltage $v_s(t)$. The frequency is 60 Hz.

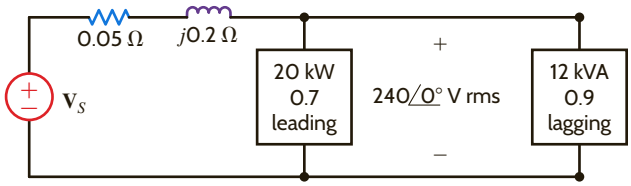

Figure P9.91

9.92 Find the complex power supplied by the source, the power factor of the source, and $v_s(t)$ if $f = 60$ Hz in Fig. P9.92.

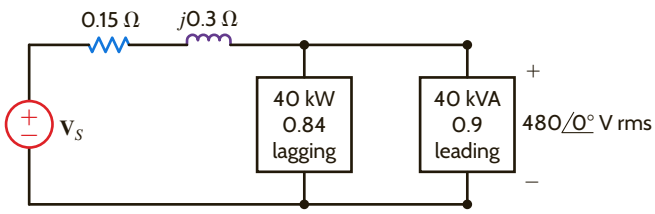

Figure P9.92

9.93 Given the circuit in Fig. P9.93, find the complex power supplied by the source and the source power factor. If $f = 60$ Hz, find $v_s(t)$.

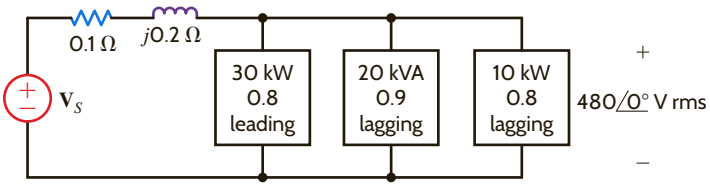

Figure P9.93

9.94 Given the network in Fig. P9.94, compute the input source voltage and the input power factor.

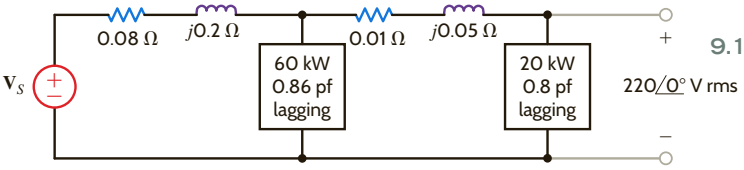

Figure P9.94

9.95 Given the network in Fig. P9.95, compute the input source voltage and the input power factor.

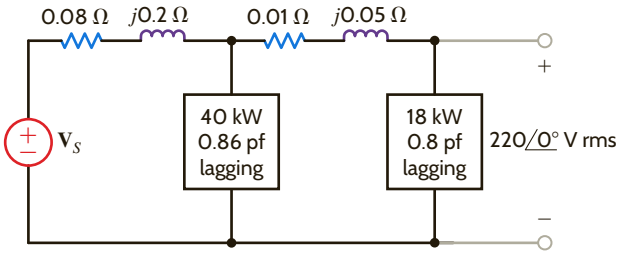

Figure P9.95

9.96 A particular load has a pf of 0.8 lagging. The power delivered to the load is 40 kW from a 270-V rms 60-Hz line. What value of capacitance placed in parallel with the load will raise the pf to 0.9 lagging?

9.97 What value of capacitance must be placed in parallel with the 18-kW load in Problem 9.95 to raise the power factor of this load to 0.9 lagging?

9.98 An industrial load consumes 44 kW at 0.82 pf lagging from a $240\angle 0°$-V rms 60-Hz line. A bank of capacitors totaling 600 μF is available. If these capacitors are placed in parallel with the load, what is the new power factor of the total load?

9.99 A plant consumes 60 kW at a power factor of 0.75 lagging from a 240-V rms 60-Hz line. Determine the value of the capacitor that when placed in parallel with the load will change the load power factor to 0.9 lagging.

9.100 An industrial load is supplied through a transmission line that has a line impedance of $0.1 + j0.2\ \Omega$. The 60-Hz line voltage at the load is $480\angle 0°$ V rms. The load consumes 124 kW at 0.75 pf lagging. What value of capacitance when placed in parallel with the load will change the power factor to 0.9 lagging?

9.101 The 60-Hz line voltage for a 60-kW, 0.76-pf lagging industrial load is $240\angle 0°$ V rms. Find the value of capacitance that when placed in parallel with the load will raise the power factor to 0.9 lagging.

9.102 A particular load has a pf of 0.8 lagging. The power delivered to the load is 40 kW from a 220-V rms 60-Hz line. What value of capacitance placed in parallel with the load will raise the pf to 0.9 lagging?

9.103 The load in the network in Fig. P9.103 is located in New York. It consumes 64 kW at 0.68 pf lagging. Find the value of the capacitor that when placed in parallel with the load will raise the power factor to 0.92 lagging.

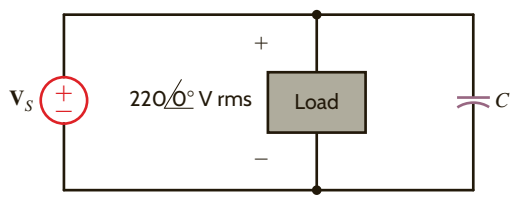

Figure P9.103

9.104 The load in the network in Fig. P9.104 is located in Nevada. It consumes 100 kW at 0.8 pf lagging. Find the value of the capacitor that when placed in parallel with the load will raise the power factor to 0.95 lagging.

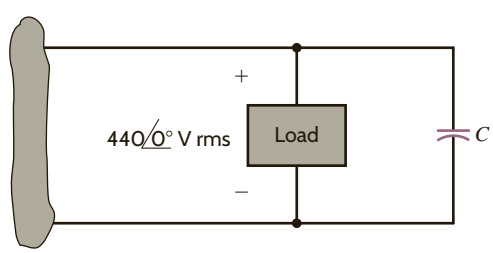

Figure P9.104

9.105 The load shown in Fig. P9.105 is located in Austin, Texas. Determine the new power factor if 3300 microfarads of capacitance is placed in parallel with this load.

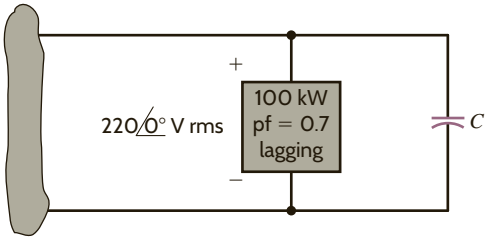

Figure P9.105

9.106 An industrial load, located in San Diego, has the following characteristics: 100 kW at 0.707 pf lagging and the line voltage is 480/0° V rms. Find the value of the capacitor that when placed in parallel with the load will raise the power factor to 0.92 lagging.

9.107 An industrial load, located in Chicago, has the following characteristics: 300 kW at 0.70 pf lagging and the line voltage is 480/0° V rms. Find the value of the capacitor that when placed in parallel with the load will raise the power factor to 0.92 lagging.

9.108 An industrial load, located in Memphis, has the following characteristics: 100 kW at 0.70 pf lagging and the line voltage is 220/0° V rms. Find the value of the capacitor that when placed in parallel with the load will raise the power factor to 0.92 lagging.

9.109 A 5-kW load operates at 60 Hz, 240-V rms and has a power factor of 0.866 lagging. We wish to create a power factor of at least 0.975 lagging using a single capacitor. What is the smallest value of capacitance that would meet the requirement?

9.110 A 5.1-kW household range is designed to operate on a 240-V rms sinusoidal voltage, as shown in Fig. P9.110a. However, the electrician has mistakenly connected the range to 120 V rms, as shown in Fig. P9.110b. What is the effect of this error?

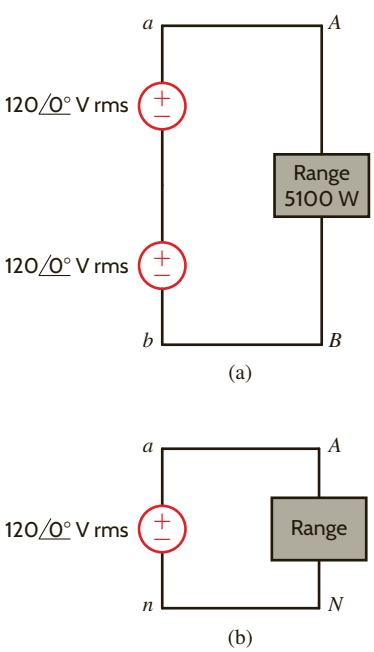

Figure P9.110

9.111 A single-phase three-wire 60-Hz circuit serves three loads, as shown in Fig. P9.111. Determine $\mathbf{I}_{aA}$, $\mathbf{I}_{nN}$, $\mathbf{I}_c$, and the energy use over a 24-hour period in kilowatt-hours.

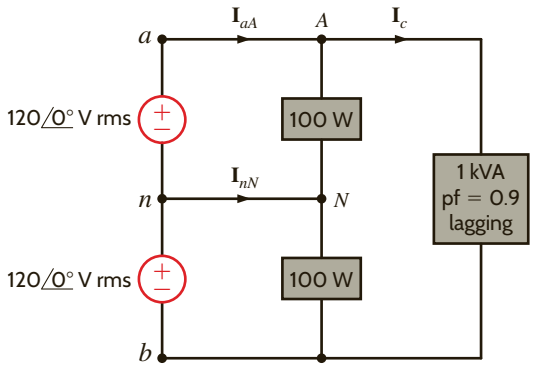

Figure P9.111

9.112 A number of 120-V rms household fixtures are to be used to provide lighting for a large room. The total lighting load is 8 kW. The National Electric Code requires that no circuit breaker be larger than 20 A rms with a 25% safety margin. Determine the number of identical branch circuits needed for this requirement.

9.113 To test a light socket, a woman, while standing on cushions that insulate her from the ground, sticks her finger into the socket, as shown in Fig. P9.113. The tip of her finger makes contact with one side of the line, and the side of her finger makes contact with the other side of the line. Assuming that any portion of a limb has a resistance of 95 Ω, is there any current in the body? Is there any current in the vicinity of the heart?

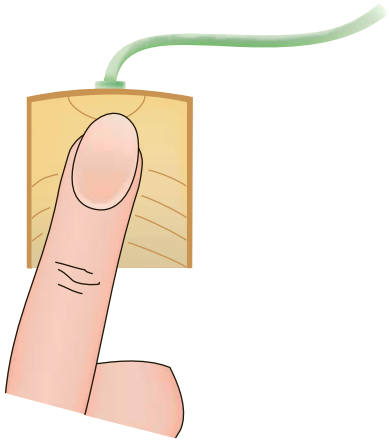

Figure P9.113

9.114 An inexperienced mechanic is installing a 12-V battery in a car. The negative terminal has been connected. He is currently tightening the bolts on the positive terminal. With a tight grip on the wrench, he turns it so that the gold ring on his finger makes contact with the frame of the car. This situation is modeled in Fig. P9.114, where we assume that the resistance of the wrench is negligible and the resistance of the contact is as follows:

$$R_1 = R_{\text{bolt to wrench}} = 0.012\ \Omega$$
$$R_2 = R_{\text{wrench to ring}} = 0.012\ \Omega$$
$$R_3 = R_{\text{ring}} = 0.012\ \Omega$$
$$R_4 = R_{\text{ring to frame}} = 0.012\ \Omega$$

What power is quickly dissipated in the gold ring, and what is the impact of this power dissipation?

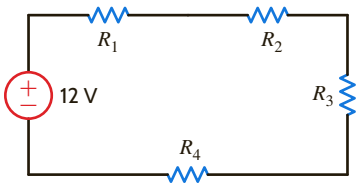

Figure P9.114

9.115 A man and his son are flying a kite. The kite becomes entangled in a 7200-V rms power line close to a power pole. The man crawls up the pole to remove the kite. While trying to remove the kite, the man accidentally touches the 7200-V rms line. Assuming that the power pole is well grounded, what is the potential current through the man's body?

TYPICAL PROBLEMS FOUND ON THE FE EXAM

9PFE-1 An industrial load consumes 120 kW at 0.707 pf lagging and is connected to a $480\angle 0°$ V rms 60-Hz line. Determine the value of the capacitor that, when connected in parallel with the load, will raise the power factor to 0.95 lagging.

a. 642 μF **c.** 928 μF
b. 763 μF **d.** 471 μF

9PFE-2 Determine the rms value of the following waveform.

a. 2.33 V **c.** 3.25 V
b. 1 V **d.** 1.22 V

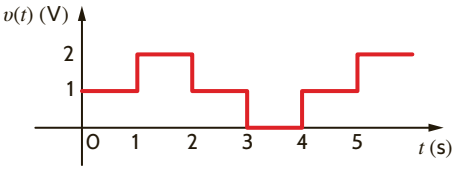

Figure 9PFE-2

9PFE-3 Find the impedance $\mathbf{Z}_L$ in the network in Fig. 9PFE-3 for maximum power transfer.

a. $0.8 + j2.4\ \Omega$ **c.** $0.2 + j1.4\ \Omega$
b. $0.4 - j1.2\ \Omega$ **d.** $0.3 - j1.6\ \Omega$

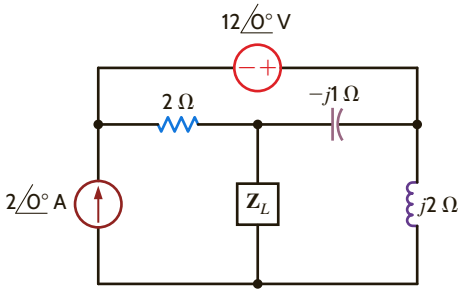

Figure 9PFE-3

9PFE-4 An rms-reading voltmeter is connected to the output of the op-amp shown in Fig. 9PFE-4. Determine the meter reading.

a. 3 V **c.** 4.24 V
b. 5.2 V **d.** 2 V

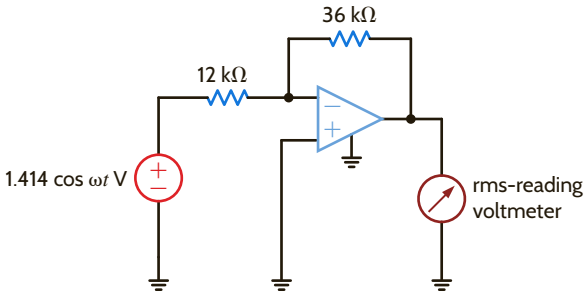

Figure 9PFE-4

9PFE-5 Determine the average power delivered to the resistor in Fig. 9PFE-5a if the current waveform is shown in Fig. 9PFE-5b.

a. 18.78 W **c.** 2.82 W
b. 8.64 W **d.** 10.91 W

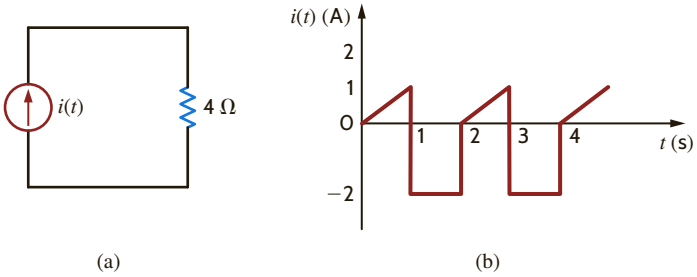

Figure 9PFE-5

Chapter Ten

MAGNETICALLY COUPLED NETWORKS

THE LEARNING GOALS FOR THIS CHAPTER ARE THAT STUDENTS SHOULD BE ABLE TO:

- Demonstrate an understanding of the concepts of mutual inductance, coefficient of coupling, and turns ratio through the analysis of circuits containing magnetically coupled components.
- Analyze circuits containing mutual inductance to determine the voltages and currents.
- Calculate voltages and currents in circuits containing ideal transformers.

EXPERIMENTS THAT HELP STUDENTS DEVELOP AN UNDERSTANDING OF MAGNETICALLY COUPLED CIRCUITS ARE:

- Transformer Dot Markings and Turns Ratio: Identify the polarity of the terminals of a transformer from the dot notation and determine the basic magnitude and phase relationships for the voltage between the primary and secondary terminals of an iron-core transformer.
- Properties of a Real Transformer: Calculate the components used to model a real transformer from experimental measurements and then use this model to predict the frequency response of the transformer.
- Hybrid Couplers: Construct a hybrid coupler from two transformers, measure the isolation between ports, and explore the effects of varying the values of the resistive loads on its ports.

10.1 Mutual Inductance

As we introduce this subject, we feel compelled to remind the reader, once again, that in our analyses we assume that we are dealing with "ideal" elements. For example, we ignore the resistance of the coil used to make an inductor and any stray capacitance that might exist. This approach is especially important in our discussion of mutual inductance because an exact analysis of this topic is quite involved. As is our practice, we will treat the subject in a straightforward manner and ignore issues beyond the scope of this book that only serve to complicate the presentation.

To begin our discussion of mutual inductance, we will recall two important laws: Ampère's law and Faraday's law. Ampère's law predicts that the flow of electric current will create a magnetic field. If the field links an electric circuit, and that field is time-varying, Faraday's law predicts the creation of a voltage within the linked circuit. Although this occurs to some extent in all circuits, the effect is magnified in coils because the circuit geometry amplifies the linkage effect. With these ideas in mind, consider the ideal situation in **Fig. 10.1** in which a current i flows in an N-turn coil and produces a magnetic field, represented by magnetic flux ϕ. The flux linkage for this coil is

$$\lambda = N\phi \tag{10.1}$$

For the linear systems that we are studying in this textbook, the flux linkage and current are related by

$$\lambda = Li \tag{10.2}$$

The constant of proportionality between the flux linkage and current is the inductance, which we studied in Chapter 6. Eqs. (10.1) and (10.2) can be utilized to express the magnetic flux in terms of the current:

$$\phi = \frac{L}{N} i \tag{10.3}$$

According to Faraday's law, the voltage induced in the coil is related to the time rate of change of the flux linkage λ:

$$v = \frac{d\lambda}{dt} \tag{10.4}$$

Let's substitute Eq. (10.2) into Eq. (10.4) and use the chain rule to take the derivative:

$$v = \frac{d\lambda}{dt} = \frac{d}{dt}(Li) = L\frac{di}{dt} + i\frac{dL}{dt} \tag{10.5}$$

We will not allow our inductances to vary with time, so Eq. (10.5) reduces to the defining equation for the ideal inductor, as shown in **Fig. 10.2**:

$$v = L\frac{di}{dt} \tag{10.6}$$

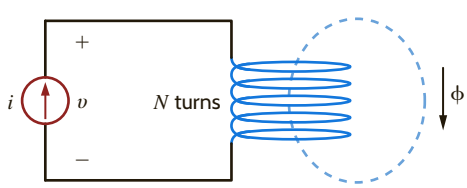

Figure 10.1
Magnetic flux ϕ linking an N-turn coil.

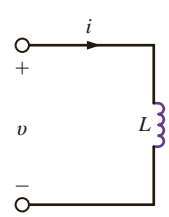

Figure 10.2
An ideal inductor.

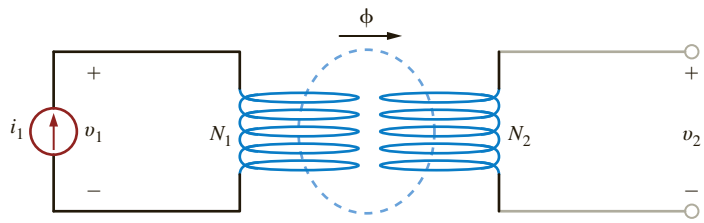

Figure 10.3
Two coils magnetically coupled.

Note that the voltage and current in this figure satisfy the passive sign convention. Eq. (10.6) tells us that a current i flowing through a coil produces a voltage v across that coil.

Now let's suppose that a second coil with N_2 turns is moved close enough to an N_1-turn coil such that the magnetic flux produced by current i_1 links the second coil. No current flows in the second coil as shown in **Fig. 10.3**. By Faraday's law, a voltage v_2 will be induced because the magnetic flux ϕ links the second coil. The flux linkage for coil 1 is

$$\lambda_i = N_1\phi = L_1 i_1 \tag{10.7}$$

Current flowing in coil 1 produces a voltage $v_1 = \dfrac{d\lambda_1}{dt} = L_1\dfrac{di_1}{dt}$. We have been referring to L_1 as the inductance. In multiple coil systems, we will refer to L_1 as the self-inductance of coil 1. The flux linkage for coil 2 is $\lambda_2 = N_2\phi$, and from Faraday's law, the voltage v_2 is given as

$$v_2 = \frac{d\lambda_2}{dt} = \frac{d}{dt}(N_2\phi) = \frac{d}{dt}\left(N_2\left(\frac{L_1}{N_1}i_1\right)\right) = \frac{N_2}{N_1}L_1\frac{di_1}{dt} = L_{21}\frac{di_1}{dt} \tag{10.8}$$

Note that the voltage v_2 is directly proportional to the time rate of change of i_1. The constant of proportionality, L_{21}, is defined as the mutual inductance and is given in units of henrys. We will say that the coils in Fig. 10.3 are magnetically coupled.

Let's connect a current source to the terminals of coil 2 as shown in **Fig. 10.4**. Both currents contribute to the magnetic flux ϕ. For the coil configuration and current directions shown in this figure, the flux linkages for each coil are

$$\lambda_1 = L_1 i_1 + L_{12} i_2 \tag{10.9}$$

$$\lambda_2 = L_{21} i_1 + L_2 i_2 \tag{10.10}$$

Applying Faraday's law,

$$v_1 = \frac{d\lambda_1}{dt} = L_1\frac{di_1}{dt} + L_{12}\frac{di_2}{dt} \tag{10.11}$$

$$v_2 = \frac{d\lambda_2}{dt} = L_{21}\frac{di_1}{dt} + L_2\frac{di_2}{dt} \tag{10.12}$$

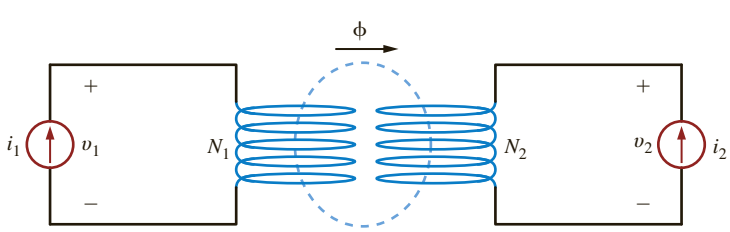

Figure 10.4
Two magnetically coupled coils driven by current sources.

Since we have limited our study to linear systems, $L_{12} = L_{21} = M$, where M is the symbol for mutual inductance. From Eqs. (10.11) and (10.12), we can see that the voltage across each coil is composed of two terms: a "self term" due to current flowing in that coil and a "mutual term" due to current flowing in the other coil.

If the direction of i_2 in Fig. 10.4 is reversed, Eqs. (10.9) through (10.12) become

$$\lambda_1 = L_1 i_1 - M i_2 \tag{10.13}$$

$$\lambda_2 = -M i_1 + L_2 i_2 \tag{10.14}$$

$$v_1 = \frac{d\lambda_1}{dt} = L_1 \frac{di_1}{dt} - M \frac{di_2}{dt} \tag{10.15}$$

$$v_2 = \frac{d\lambda_2}{dt} = -M \frac{di_1}{dt} + L_2 \frac{di_2}{dt} \tag{10.16}$$

Eqs. (10.13)–(10.16) can also be obtained from the circuit in **Fig. 10.5**. Note that coil 2 in this figure has a different winding arrangement as compared to coil 2 in Fig. 10.4.

Our circuit diagrams will become quite complex if we have to include details of the winding configuration. The use of the dot convention permits us to maintain these details while simplifying our circuit diagrams. **Fig. 10.6a** is the circuit diagram for the magnetically coupled coils of Fig. 10.4. The coils are represented by two coupled inductors with self-inductances L_1 and L_2 and mutual inductance M. The voltage across each coil consists of two terms: a self term due to current flowing in that coil and a mutual term due to current flowing in the other coil. The self term is the same voltage that we discussed in an earlier chapter. The mutual term results from current flowing in the other coupled coil.

Figure 10.5

Magnetically coupled coils with different winding configuration.

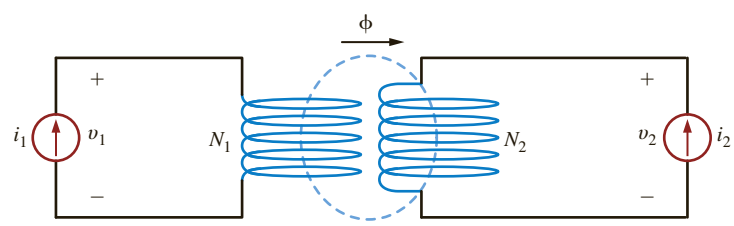

Figure 10.6

Circuit diagrams for magnetically coupled coils.

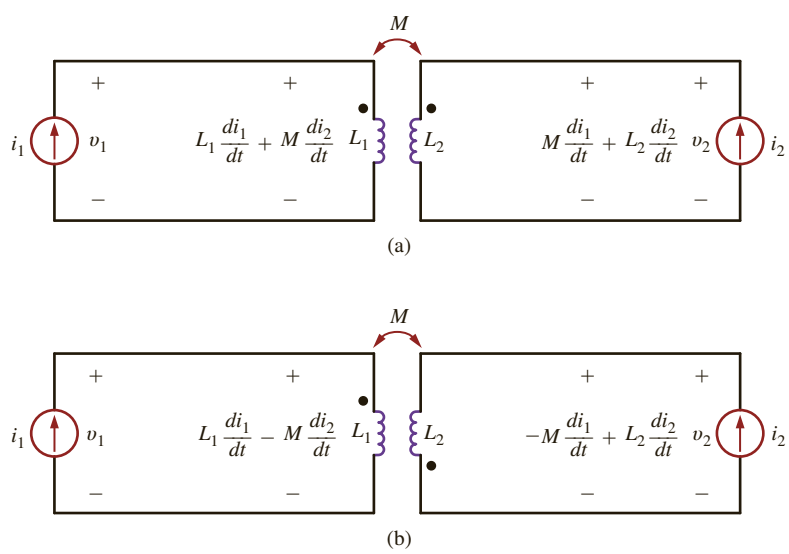

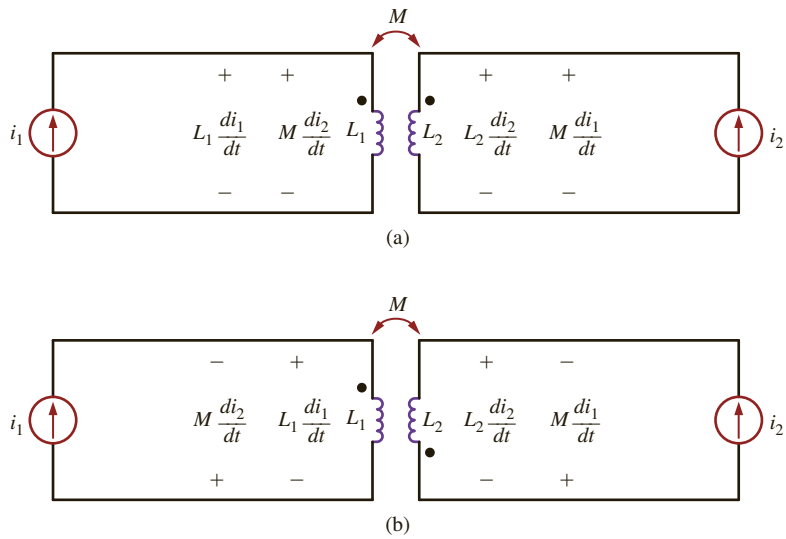

Figure 10.7

Circuit diagrams for magnetically coupled coils showing self and mutual voltage terms.

In Fig. 10.6a, the mutual terms are positive when both currents enter the dots. The opposite is true when one current enters a dot and the other current leaves a dot, as shown in Fig. 10.6b. Let's use this observation to develop a general procedure for writing circuit equations for magnetically coupled inductors. **Fig. 10.7a** is the same diagram as Fig. 10.6a except that the voltage across the inductors is broken into the self term and the mutual term. The polarity of the self terms—$L_1 di_1/dt$ and $L_2 di_2/dt$—are given by the passive sign convention used extensively throughout this text. These terms would be present even if the coils were not magnetically coupled. The mutual terms in Fig. 10.7a have the same polarity as the self terms. Note that both currents are entering the dots in Fig. 10.7a. The opposite is true in **Fig. 10.7b**. The self terms have the same polarity as before; however, the polarities for the mutual terms are different from those in Fig. 10.7a. We can now make a general statement:

> When a current is defined to enter the dotted terminal of a coil, it produces a voltage in the coupled coil, which is positive at the dotted terminal. Similarly, when a current is defined to enter the undotted terminal of a coil, it produces a voltage in the coupled coil, which is positive at the undotted terminal.

Let's illustrate the use of this statement through some examples.

PROBLEM-SOLVING STRATEGY

MAGNETICALLY COUPLED INDUCTORS

STEP 1. Assign mesh currents. It is usually much easier to write mesh equations for a circuit containing magnetically coupled inductors than nodal equations.

STEP 2. Write mesh equations by appling KVL. If a defined current enters the dotted terminal on one coil, it produces a voltage in the other coil that is positive at the dotted terminal. If a defined current enters the undotted terminal on one coil, it produces a voltage in the other coil that is positive at the undotted terminal.

STEP 3. Solve for the mesh currents.

EXAMPLE 10.1

Determine the equations for $v_1(t)$ and $v_2(t)$ in the circuit shown in Fig. 10.8a.

SOLUTION

The different voltage terms for the circuit are shown on the circuit diagram in Fig. 10.8b. The polarity of the self terms is given by the passive sign convention. For both coils, the defined currents are entering the undotted terminals on both coils. As a result, the polarity of the voltages produced by these currents is positive at the undotted terminal of the other coils. The equations for $v_1(t)$ and $v_2(t)$ are

$$v_1(t) = -L_1\frac{di_1}{dt} - M\frac{di_2}{dt}$$

$$v_2(t) = L_2\frac{di_2}{dt} + M\frac{di_1}{dt}$$

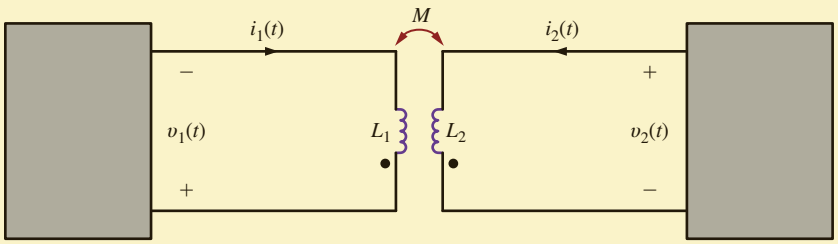

Figure 10.8a
Circuit used in Example 10.1.

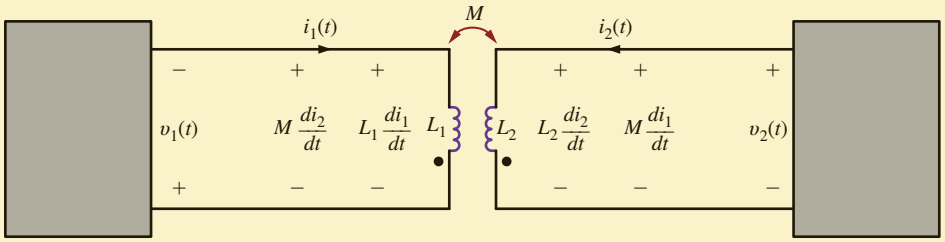

Figure 10.8b
Circuit showing self and mutual voltage terms.

EXAMPLE 10.2

Write mesh equations for the circuit of Fig. 10.9a using the assigned mesh currents.

SOLUTION

The circuit in Fig. 10.9b shows the voltage terms for mesh 1. The polarity of the self terms for L_1 and L_2 is determined by the passive sign convention. The current $(i_2 - i_1)$ enters the dotted terminal of inductor L_2. This current produces the mutual term shown across inductor L_1. Current i_1 enters the dotted terminal of L_1 and produces a voltage across L_2 that is positive at its dotted terminal. The equation for this mesh is

$$v_1(t) = R_1 i_1(t) + L_1\frac{di_1}{dt} + M\frac{d}{dt}(i_2 - i_1) + L_2\frac{d}{dt}(i_1 - i_2) - M\frac{di_1}{dt}$$

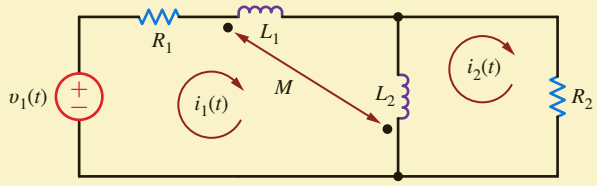

Figure 10.9a
Circuit used in Example 10.2.

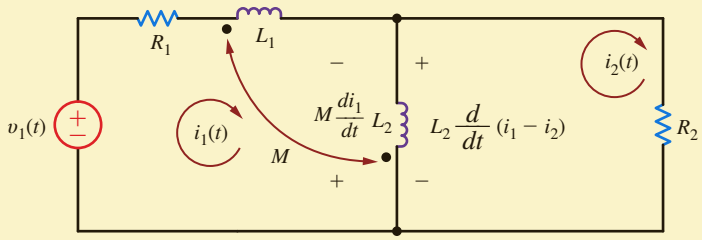

Figure 10.9b
Circuit showing voltage terms for mesh 1.

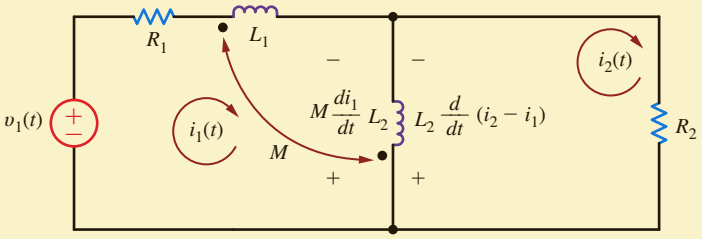

Figure 10.9c
Circuit showing voltage terms for mesh 2.

The voltage terms for the second mesh are shown in **Fig. 10.9c**. The equation for mesh 2 is

$$R_2 i_2(t) + L_2 \frac{d}{dt}(i_2 - i_1) + M\frac{di_1}{dt} = 0$$

LEARNING ASSESSMENT

E10.1 Write the equations for $v_1(t)$ and $v_2(t)$ in the circuit in Fig. E10.1.

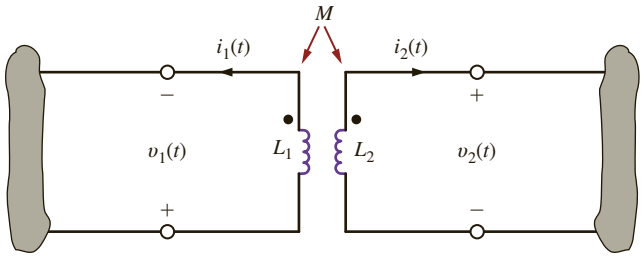

Figure E10.1

ANSWER:

$$v_1(t) = L_1\frac{di_1(t)}{dt} + M\frac{di_2(t)}{dt},$$

$$v_2(t) = -L_2\frac{di_2(t)}{dt} - M\frac{di_1(t)}{dt}.$$

Assume that the coupled circuit in **Fig. 10.10** is excited with a sinusoidal source. The voltages will be of the form $\mathbf{V}_1 e^{j\omega t}$ and $\mathbf{V}_2 e^{j\omega t}$, and the currents will be of the form $\mathbf{I}_1 e^{j\omega t}$ and $\mathbf{I}_2 e^{j\omega t}$, where $\mathbf{V}_1$, $\mathbf{V}_2$, $\mathbf{I}_1$, and $\mathbf{I}_2$ are phasors. Substituting these voltages and currents into Eqs. (10.11) and (10.12), and using the fact that $L_{12} = L_{21} = M$, we obtain

$$\begin{aligned} \mathbf{V}_1 &= j\omega L_1 \mathbf{I}_1 + j\omega M \mathbf{I}_2 \\ \mathbf{V}_2 &= j\omega L_2 \mathbf{I}_2 + j\omega M \mathbf{I}_1 \end{aligned} \qquad \textbf{10.17}$$

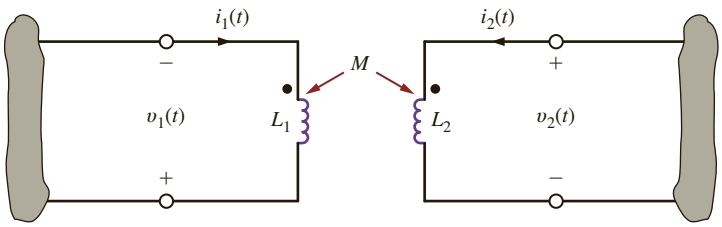

Figure 10.10
Mutually coupled coils.

The model of the coupled circuit in the frequency domain is identical to that in the time domain except for the way the elements and variables are labeled. The sign on the mutual terms is handled in the same manner as is done in the time domain.

EXAMPLE 10.3

The two mutually coupled coils in **Fig. 10.11a** can be interconnected in four possible ways. We wish to determine the equivalent inductance of each of the four possible interconnections.

SOLUTION

Case 1 is shown in **Fig. 10.11b**. In this case

$$\begin{aligned}\mathbf{V} &= j\omega L_1\mathbf{I} + j\omega M\mathbf{I} + j\omega L_2\mathbf{I} + j\omega M\mathbf{I}\\ &= j\omega L_{eq}\mathbf{I}\end{aligned}$$

where $L_{eq} = L_1 + L_2 + 2M$.

Case 2 is shown in **Fig. 10.11c**. Using KVL, we obtain

$$\begin{aligned}\mathbf{V} &= j\omega L_1\mathbf{I} - j\omega M\mathbf{I} + j\omega L_2\mathbf{I} - j\omega M\mathbf{I}\\ &= j\omega L_{eq}\mathbf{I}\end{aligned}$$

where $L_{eq} = L_1 + L_2 - 2M$.

Case 3 is shown in **Fig. 10.11d** and redrawn in **Fig. 10.11e**. The two KVL equations are

$$\mathbf{V} = j\omega L_1\mathbf{I}_1 + j\omega M\mathbf{I}_2$$
$$\mathbf{V} = j\omega M\mathbf{I}_1 + j\omega L_2\mathbf{I}_2$$

Solving these equations for $\mathbf{I}_1$ and $\mathbf{I}_2$ yields

$$\mathbf{I}_1 = \frac{\mathbf{V}(L_2 - M)}{j\omega(L_1L_2 - M^2)}$$
$$\mathbf{I}_2 = \frac{\mathbf{V}(L_1 - M)}{j\omega(L_1L_2 - M^2)}$$

Using KCL gives us

$$\mathbf{I} = \mathbf{I}_1 + \mathbf{I}_2 = \frac{\mathbf{V}(L_1 + L_2 - 2M)}{j\omega(L_1L_2 - M^2)} = \frac{\mathbf{V}}{j\omega L_{eq}}$$

where

$$L_{eq} = \frac{L_1L_2 - M^2}{L_1 + L_2 - 2M}$$

Case 4 is shown in **Fig. 10.11f**. The voltage equations in this case will be the same as those in case 3 except that the signs of the mutual terms will be negative. Therefore,

$$L_{eq} = \frac{L_1L_2 - M^2}{L_1 + L_2 + 2M}$$

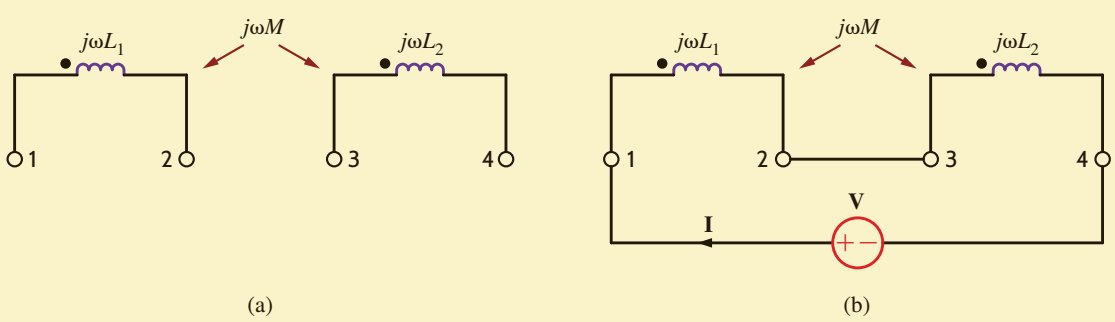

Figure 10.11
Circuits used in Example 10.3.

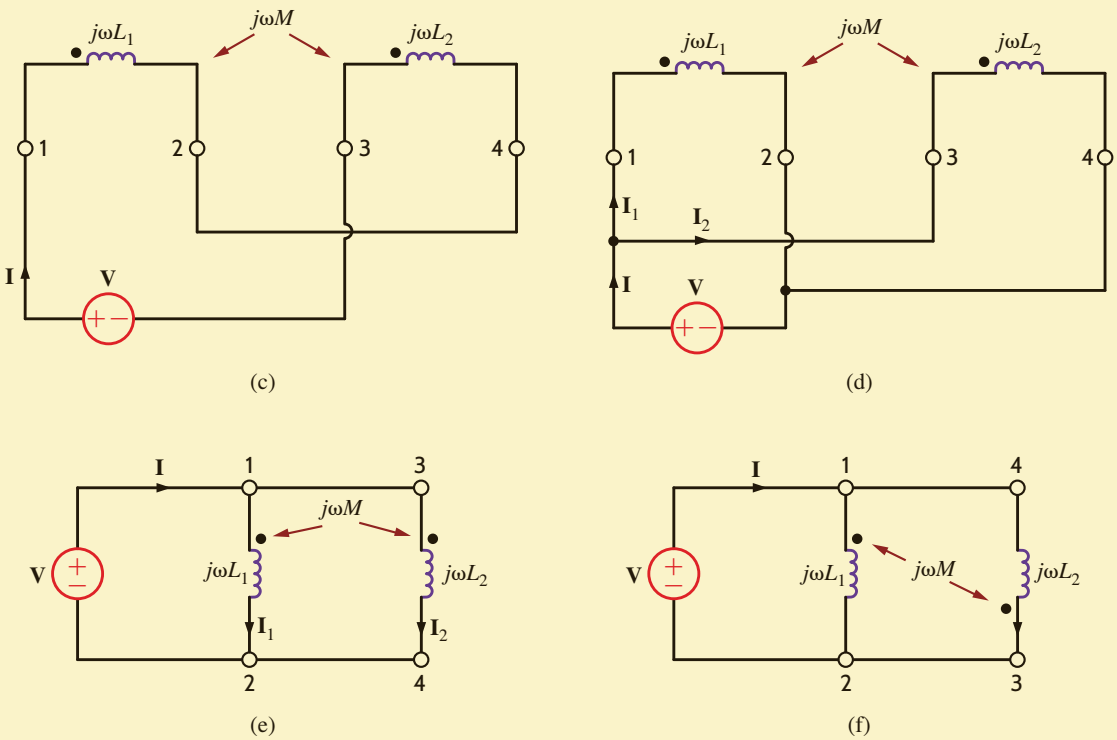

Figure 10.11
(continued)

EXAMPLE 10.4

We wish to determine the output voltage $\mathbf{V}_o$ in the circuit in Fig. 10.12.

SOLUTION

The two KVL equations for the network are

$$(2 + j4)\mathbf{I}_1 - j2\mathbf{I}_2 = 24\underline{/30^\circ}$$
$$-j2\mathbf{I}_1 + (2 + j6 - j2)\mathbf{I}_2 = 0$$

Solving the equations yields

$$\mathbf{I}_2 = 2.68\underline{/3.43^\circ}\ \text{A}$$

Therefore,

$$\mathbf{V}_o = 2\mathbf{I}_2$$
$$= 5.36\underline{/3.43^\circ}\ \text{V}$$

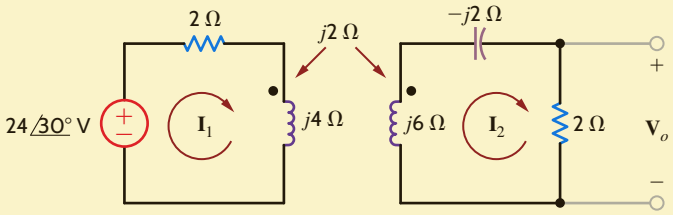

Figure 10.12
Example of a magnetically coupled circuit.

Let us now consider a more complicated example involving mutual inductance.

EXAMPLE 10.5

Consider the circuit in Fig. 10.13. We wish to write the mesh equations for this network.

SOLUTION

Because of the multiple currents that are present in the coupled inductors, we must be very careful in writing the circuit equations.

The mesh equations for the phasor network are

$$\mathbf{I}_1R_1 + j\omega L_1(\mathbf{I}_1 - \mathbf{I}_2) + j\omega M(\mathbf{I}_2 - \mathbf{I}_3) + \frac{1}{j\omega C_1}(\mathbf{I}_1 - \mathbf{I}_2) = \mathbf{V}$$

$$\frac{1}{j\omega C_1}(\mathbf{I}_2 - \mathbf{I}_1) + j\omega L_1(\mathbf{I}_2 - \mathbf{I}_1) + j\omega M(\mathbf{I}_3 - \mathbf{I}_2) + R_2\mathbf{I}_2 + j\omega L_2(\mathbf{I}_2 - \mathbf{I}_3) + j\omega M(\mathbf{I}_1 - \mathbf{I}_2) + R_3(\mathbf{I}_2 - \mathbf{I}_3) = 0$$

$$R_3(\mathbf{I}_3 - \mathbf{I}_2) + j\omega L_2(\mathbf{I}_3 - \mathbf{I}_2) + j\omega M(\mathbf{I}_2 - \mathbf{I}_1) + \frac{1}{j\omega C_2}\mathbf{I}_3 + R_4\mathbf{I}_3 = 0$$

which can be rewritten in the form

$$\left(R_1 + j\omega L_1 + \frac{1}{j\omega C_1}\right)\mathbf{I}_1 - \left(j\omega L_1 + \frac{1}{j\omega C_1} - j\omega M\right)\mathbf{I}_2 - j\omega M\mathbf{I}_3 = \mathbf{V}$$

$$-\left(j\omega L_1 + \frac{1}{j\omega C_1} - j\omega M\right)\mathbf{I}_1 + \left(\frac{1}{j\omega C_1} + j\omega L_1 + R_2 + j\omega L_2 + R_3 - j2\omega M\right)\mathbf{I}_2 - (j\omega L_2 + R_3 - j\omega M)\mathbf{I}_3 = 0$$

$$-j\omega M\mathbf{I}_1 - (R_3 + j\omega L_2 - j\omega M)\mathbf{I}_2 + \left(R_3 + j\omega L_2 + \frac{1}{j\omega C_2} + R_4\right)\mathbf{I}_3 = 0$$

Note the symmetrical form of these equations.

Figure 10.13

Example of a magnetically coupled circuit.

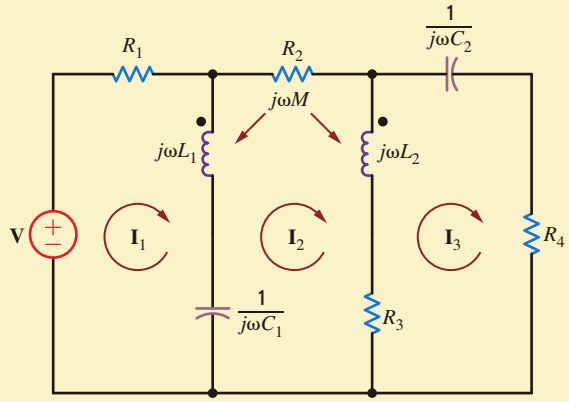

LEARNING ASSESSMENTS

E10.2 Find the currents $\mathbf{I}_1$ and $\mathbf{I}_2$ and the output voltage $\mathbf{V}_o$ in the network in Fig. E10.2.

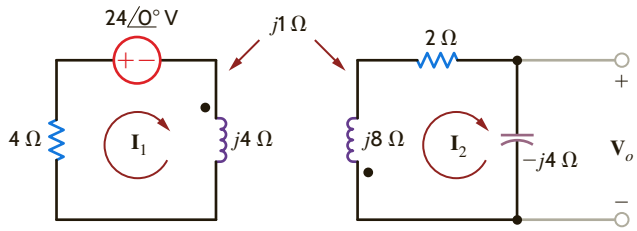

Figure E10.2

ANSWER:
$\mathbf{I}_1 = +4.29\underline{/137.2^\circ}$ A;
$\mathbf{I}_2 = 0.96\underline{/-16.26^\circ}$ A;
$\mathbf{V}_o = 3.84\underline{/-106.26^\circ}$ V.

E10.3 Write the KVL equations in standard form for the network in Fig. E10.3.

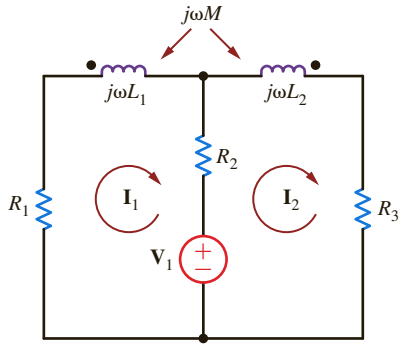

Figure E10.3

ANSWER:

$$(R_1 + j\omega L_1 + R_2)\mathbf{I}_1 - (R_2 + j\omega M)\mathbf{I}_2 = -\mathbf{V}_1;$$
$$-(R_2 + j\omega M)\mathbf{I}_1 + (R_2 + j\omega L_2 + R_3)\mathbf{I}_2 = \mathbf{V}_1.$$

E10.4 Find $\mathbf{V}_o$ in Fig. E10.4.

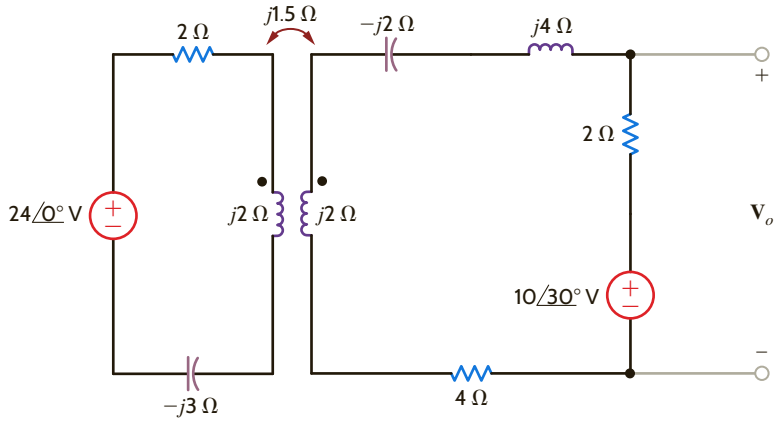

Figure E10.4

ANSWER:
$\mathbf{V}_o = 11.2\underline{/53.5^\circ}$ V.

E10.5 Find $\mathbf{V}_o$ in Fig. E10.5.

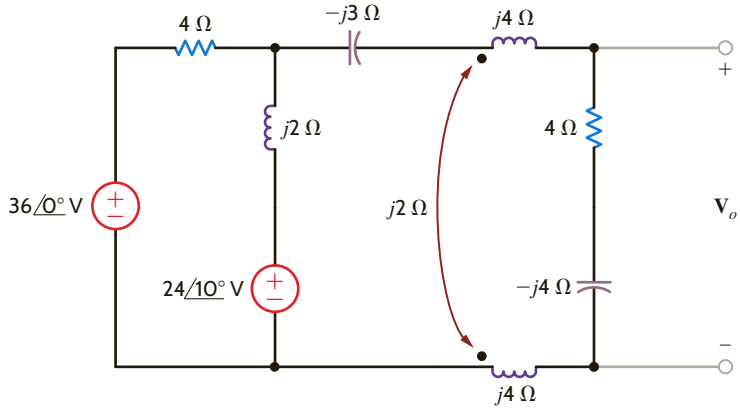

Figure E10.5

ANSWER:
$\mathbf{V}_o = 32.8\underline{/-12.14^\circ}$ V.

E10.6 Find $\mathbf{V}_o$ in Fig. E10.6.

ANSWER:
$\mathbf{V}_o = 11.4\angle 0.334^\circ$ V.

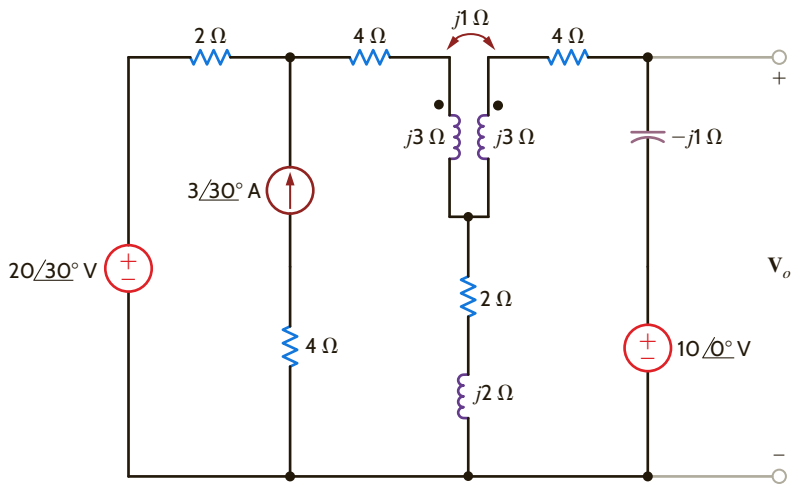

Figure E10.6

EXAMPLE 10.6

Given the network in Fig. 10.14 with the parameters $\mathbf{Z}_S = 3 + j1\ \Omega$, $j\omega L_1 = j2\ \Omega$, $j\omega L_2 = j2\ \Omega$, $j\omega M = j1\ \Omega$, and $\mathbf{Z}_L = 1 - j1\ \Omega$, determine the impedance seen by the source $\mathbf{V}_S$.

SOLUTION

The mesh equations for the network are

$$\mathbf{V}_S = (\mathbf{Z}_S + j\omega L_1)\mathbf{I}_1 - j\omega M\mathbf{I}_2$$
$$0 = -j\omega M\mathbf{I}_1 + (j\omega L_2 + \mathbf{Z}_L)\mathbf{I}_2$$

If we now define $\mathbf{Z}_{11} = \mathbf{Z}_S + j\omega L_1$ and $\mathbf{Z}_{22} = j\omega L_2 + \mathbf{Z}_L$, then the second equation yields

$$\mathbf{I}_2 = \frac{j\omega M}{\mathbf{Z}_{22}}\mathbf{I}_1$$

If this secondary mesh equation is substituted into the primary mesh equation, we obtain

$$\mathbf{V}_S = \mathbf{Z}_{11}\mathbf{I}_1 + \frac{\omega^2 M^2}{\mathbf{Z}_{22}}\mathbf{I}_1$$

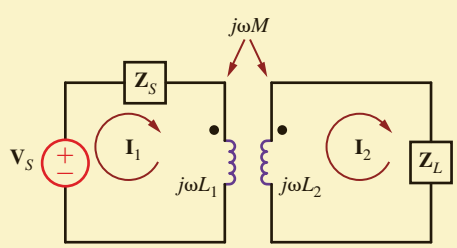

Figure 10.14
Circuit employed in Example 10.6.

and therefore

$$\frac{\mathbf{V}_S}{\mathbf{I}_1} = \mathbf{Z}_{11} + \frac{\omega^2 M^2}{\mathbf{Z}_{22}}$$

which is the impedance seen by $\mathbf{V}_S$. Note that the mutual term is squared, and therefore the impedance is independent of the location of the dots.

Using the values of the circuit parameters, we find that

$$\frac{\mathbf{V}_S}{\mathbf{I}_1} = (3 + j1 + j2) + \frac{1}{j2 + 1 - j1}$$
$$= 3 + j3 + 0.5 - j0.5$$
$$= 3.5 + j2.5\ \Omega$$

LEARNING ASSESSMENT

E10.7 Find the impedance seen by the source in the circuit in Fig. E10.7.

ANSWER:
$\mathbf{Z}_S = 2.25\underline{/20.9^\circ}\ \Omega$.

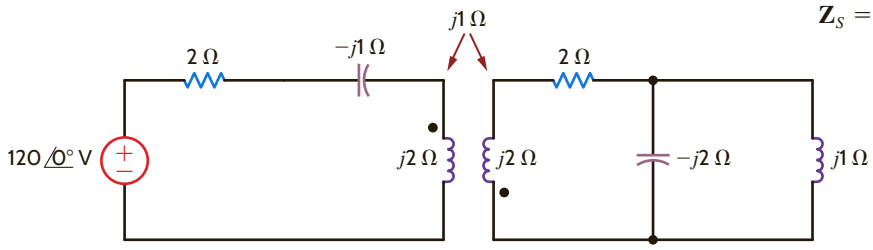

Figure E10.7

10.2 Energy Analysis

We now perform an energy analysis on a pair of mutually coupled inductors, which will yield some interesting relationships for the circuit elements. Our analysis will involve the performance of an experiment on the network shown in **Fig. 10.15**. Before beginning the experiment, we set all voltages and currents in the circuit equal to zero. Once the circuit is quiescent, we begin by letting the current $i_1(t)$ increase from zero to some value I_1 with the right-side terminals open circuited. Since the right-side terminals are open, $i_2(t) = 0$, and therefore the power entering these terminals is zero. The instantaneous power entering the left-side terminals is

$$p(t) = v_1(t)i_1(t) = \left[L_1\frac{di_1(t)}{dt}\right]i_1(t)$$

The energy stored within the coupled circuit at t_1 when $i_1(t) = I_1$ is then

$$\int_0^{t_1} v_1(t)i_1(t)\,dt = \int_0^{I_1} L_1 i_1(t)\,di_1(t) = \frac{1}{2}L_1 I_1^2$$

Continuing our experiment, starting at time t_1, we let the current $i_2(t)$ increase from zero to some value I_2 at time t_2 while holding $i_1(t)$ constant at I_1. The energy delivered through the right-side terminals is

$$\int_{t_1}^{t_2} v_2(t)i_2(t)\,dt = \int_0^{I_2} L_2 i_2(t)\,di_2(t) = \frac{1}{2}L_2 I_2^2$$

However, during the interval t_1 to t_2 the voltage $v_1(t)$ is

$$v_1(t) = L_1\frac{di_1(t)}{dt} + M\frac{di_2(t)}{dt}$$

Since $i_1(t)$ is a constant I_1, the energy delivered through the left-side terminals is

$$\int_{t_1}^{t_2} v_1(t)i_1(t)\,dt = \int_{t_1}^{t_2} M\frac{di_2(t)}{dt}I_1\,dt = MI_1\int_0^{I_2} di_2(t)$$
$$= MI_1I_2$$

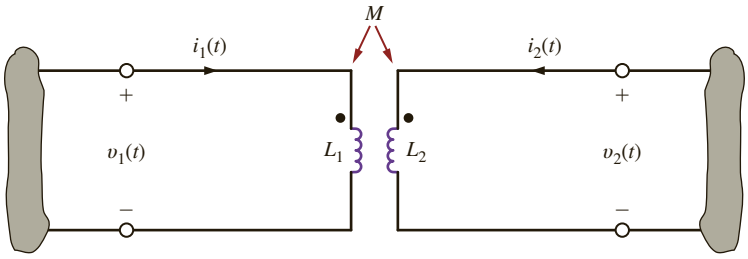

Figure 10.15
Magnetically coupled circuit.

Therefore, the total energy stored in the network for $t > t_2$ is

$$w = \frac{1}{2}L_1I_1^2 + \frac{1}{2}L_2I_2^2 + MI_1I_2 \qquad \textbf{10.18}$$

We could, of course, repeat our entire experiment with either the dot on L_1 or L_2, but not both, reversed, and in this case the sign on the mutual inductance term would be negative, producing

$$w = \frac{1}{2}L_1I_1^2 + \frac{1}{2}L_2I_2^2 - MI_1I_2$$

It is very important for the reader to realize that in our derivation of the preceding equation, by means of the experiment, the values I_1 and I_2 could have been any values at *any time*; therefore, the energy stored in the magnetically coupled inductors at any instant of time is given by the expression

$$w(t) = \frac{1}{2}L_1[i_1(t)]^2 + \frac{1}{2}L_2[i_2(t)]^2 \pm Mi_1(t)i_2(t) \qquad \textbf{10.19}$$

The two coupled inductors represent a passive network, and therefore, the energy stored within this network must be nonnegative for any values of the inductances and currents.

The equation for the instantaneous energy stored in the magnetic circuit can be written as

$$w(t) = \frac{1}{2}L_1i_1^2 + \frac{1}{2}L_2i_2^2 \pm Mi_1i_2$$

Adding and subtracting the term $1/2(M^2/L_2)i_1^2$ and rearranging the equation yields

$$w(t) = \frac{1}{2}\left(L_1 - \frac{M^2}{L_2}\right)i_1^2 + \frac{1}{2}L_2\left(i_2 + \frac{M}{L_2}i_1\right)^2$$

From this expression, we recognize that the instantaneous energy stored will be nonnegative if

$$M \le \sqrt{L_1L_2} \qquad \textbf{10.20}$$

Note that this equation specifies an upper limit on the value of the mutual inductance.

We define the coefficient of coupling between the two inductors L_1 and L_2 as

$$k = \frac{M}{\sqrt{L_1L_2}} \qquad \textbf{10.21}$$

and we note from Eq. (10.20) that its range of values is

$$0 \le k \le 1 \qquad \textbf{10.22}$$

This coefficient is an indication of how much flux in one coil is linked with the other coil; that is, if all the flux in one coil reaches the other coil, then we have 100% coupling and $k = 1$. For large values of k (i.e., $k > 0.5$), the inductors are said to be tightly coupled, and for small values of k (i.e., $k \le 0.5$), the coils are said to be loosely coupled. If there is no coupling, $k = 0$. The previous equations indicate that the value for the mutual inductance is confined to the range

$$0 \le M \le \sqrt{L_1L_2} \qquad \textbf{10.23}$$

and that the upper limit is the geometric mean of the inductances L_1 and L_2.

EXAMPLE 10.7

The coupled circuit in **Fig. 10.16a** has a coefficient of coupling of 1 (i.e., $k = 1$). We wish to determine the energy stored in the mutually coupled inductors at time $t = 5$ ms. $L_1 = 2.653$ mH and $L_2 = 10.61$ mH.

SOLUTION

From the data, the mutual inductance is

$$M = \sqrt{L_1L_2} = 5.31 \text{ mH}$$

The frequency-domain equivalent circuit is shown in **Fig. 10.16b**, where the impedance values for X_{L_1}, X_{L_2}, and X_M are 1, 4, and 2, respectively. The mesh equations for the network are then

$$(2 + j1)\mathbf{I}_1 - j2\mathbf{I}_2 = 24\underline{/0^\circ}$$
$$-j2\mathbf{I}_1 + (4 + j4)\mathbf{I}_2 = 0$$

Solving these equations for the two mesh currents yields

$$\mathbf{I}_1 = 9.41\underline{/-11.31^\circ}\text{ A} \qquad \text{and} \qquad \mathbf{I}_2 = 3.33\underline{/+33.69^\circ}\text{ A}$$

and therefore,

$$i_1(t) = 9.41\cos(377t - 11.31^\circ)\text{ A}$$
$$i_2(t) = 3.33\cos(377t + 33.69^\circ)\text{ A}$$

At $t = 5$ ms, $377t = 1.885$ radians or 108°, and therefore,

$$i_1(t = 5\text{ ms}) = 9.41\cos(108^\circ - 11.31^\circ) = -1.10\text{ A}$$
$$i_2(t = 5\text{ ms}) = 3.33\cos(108^\circ + 33.69^\circ) = -2.61\text{ A}$$

Therefore, the energy stored in the coupled inductors at $t = 5$ ms is

$$\begin{aligned} w(t)\big|_{t = 0.005\text{ s}} &= \frac{1}{2}(2.653)(10^{-3})(-1.10)^2 + \frac{1}{2}(10.61)(10^{-3})(-2.61)^2 \\ &\quad -(5.31)(10^{-3})(-1.10)(-2.61) \\ &= (1.61)(10^{-3}) + (36.14)(10^{-3}) - (15.25)(10^{-3}) \\ &= 22.5\text{ mJ} \end{aligned}$$

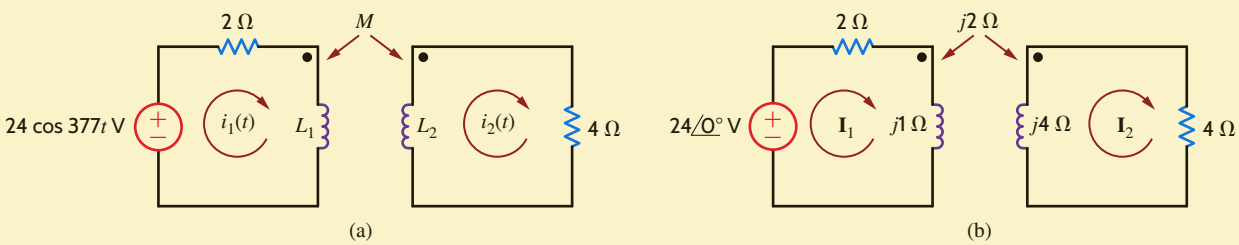

Figure 10.16

Example of a magnetically coupled circuit drawn in the time and frequency domains.

LEARNING ASSESSMENT

E10.8 The network in Fig. E10.8 operates at 60 Hz. Compute the energy stored in the mutually coupled inductors at time $t = 10$ ms.

ANSWER:
$w(10\text{ ms}) = 39$ mJ.

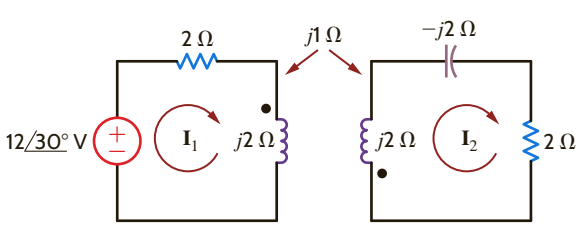

Figure E10.8

10.3 The Ideal Transformer

Consider the situation illustrated in Fig. 10.17, showing two coils of wire wound around a single closed magnetic core. Assume a core flux ϕ, which links all the turns of both coils. In the ideal case, we also neglect wire resistance. Let us now examine the coupling equations under the condition that the same flux goes through each winding, and so

$$v_1(t) = N_1 \frac{d\phi}{dt}$$

and

$$v_2(t) = N_2 \frac{d\phi}{dt}$$

and therefore,

$$\frac{v_1}{v_2} = \frac{N_1}{N_2} \frac{\frac{d\phi}{dt}}{\frac{d\phi}{dt}} = \frac{N_1}{N_2} \qquad \textbf{10.24}$$

Ampère's law requires that

$$\oint H \cdot dl = i_{\text{enclosed}} = N_1 i_1 + N_2 i_2 \qquad \textbf{10.25}$$

where H is the magnetic field intensity and the integral is over the closed path traveled by the flux around the transformer core. If $H = 0$, which is the case for an ideal magnetic core with infinite permeability, then

$$N_1 i_1 + N_2 i_2 = 0 \qquad \textbf{10.26}$$

or

$$\frac{i_1}{i_2} = -\frac{N_2}{N_1} \qquad \textbf{10.27}$$

Note that if we divide Eq. (10.26) by N_1 and multiply it by v_1, we obtain

$$v_1 i_1 + \frac{N_2}{N_1} v_1 i_2 = 0$$

However, since $v_1 = (N_1/N_2)v_2$,

$$v_1 i_1 + v_2 i_2 = 0$$

and hence the total power into the device is zero, which means that an ideal transformer is lossless.

The symbol we employ for the ideal transformer is shown in Fig. 10.18a, and the corresponding equations are

$$\begin{aligned} \frac{v_1}{v_2} &= \frac{N_1}{N_2} \\ N_1 i_1 + N_2 i_2 &= 0 \end{aligned} \qquad \textbf{10.28}$$

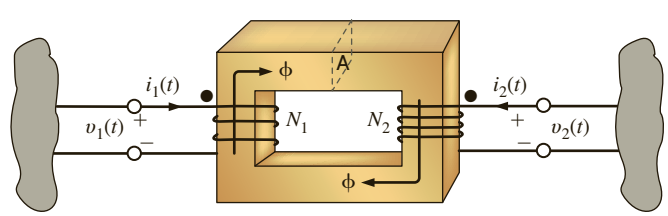

Figure 10.17
Transformer employing a magnetic core.

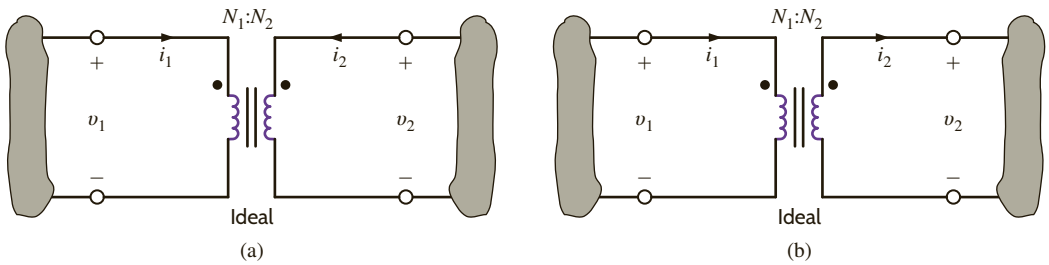

Figure 10.18

Symbol for an ideal transformer: (a) primary and secondary currents into the dots; (b) primary current into, and secondary current out of, the dots.

The normal power flow through a transformer occurs from an input current (i_1) on the primary to an output current (i_2) on the secondary. This situation is shown in **Fig. 10.18b**, and the corresponding equations are

$$\frac{v_1}{v_2} = \frac{N_1}{N_2} \qquad N_1 i_1 = N_2 i_2 \tag{10.29}$$

Note that although the voltage, current, and impedance levels change through a transformer, the power levels do not. The vertical lines between the coils, shown in the figures, represent the magnetic core. Although practical transformers do not use dots per se, they use markings specified by the National Electrical Manufacturers Association (NEMA) that are conceptually equivalent to the dots.

Thus, our model for the ideal transformer is specified by the circuit in Fig. 10.18a and the corresponding Eq. (10.28), or alternatively, by the circuit in Fig. 10.18b, together with Eq. (10.29). Therefore, it is important to note carefully that our model specifies the equations as well as the relationship among the voltages, currents, and the position of the dots. In other words, the equations are valid only for the corresponding circuit diagram. Thus, in a direct analogy to our discussion of the mutual inductance equations and their corresponding circuit, if we change the direction of the current or voltage or the position of the dots, we must make a corresponding change in the equations. The following material will clarify this critical issue.

Consider now the circuit shown in **Fig. 10.19**. If we compare this circuit to that shown in Fig. 10.18b, we find that the direction of both the currents and voltages is the same. Hence, the equations for the network are

$$\frac{\mathbf{V}_1}{\mathbf{V}_2} = \frac{N_1}{N_2}$$

and

$$\frac{\mathbf{I}_1}{\mathbf{I}_2} = \frac{N_2}{N_1}$$

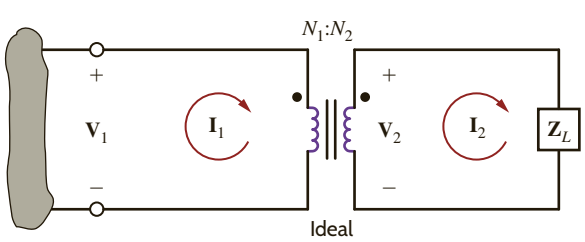

Figure 10.19

Ideal transformer circuit used to illustrate input impedance.

These equations can be written as

$$\mathbf{V}_1 = \frac{N_1}{N_2}\mathbf{V}_2 \qquad \mathbf{I}_1 = \frac{N_2}{N_1}\mathbf{I}_2 \tag{10.30}$$

Also note that

$$\mathbf{Z}_L = \frac{\mathbf{V}_2}{\mathbf{I}_2}$$

and therefore, the input impedance is

$$\mathbf{Z}_1 = \frac{\mathbf{V}_1}{\mathbf{I}_1} = \left(\frac{N_1}{N_2}\right)^2 \mathbf{Z}_L \tag{10.31}$$

where $\mathbf{Z}_L$ is reflected into the primary side by the turns ratio.

If we now define the turns ratio as

$$n = \frac{N_2}{N_1} \tag{10.32}$$

then the defining equations for the *ideal transformer* in this configuration are

$$\mathbf{V}_1 = \frac{\mathbf{V}_2}{n} \qquad \mathbf{I}_1 = n\mathbf{I}_2 \qquad \mathbf{Z}_1 = \frac{\mathbf{Z}_L}{n^2} \tag{10.33}$$

Care must be exercised in using these equations because the signs on the voltages and currents are dependent on the assigned references and their relationship to the dots.

EXAMPLE 10.8

Given the circuit shown in Fig. 10.20, we wish to determine all indicated voltages and currents.

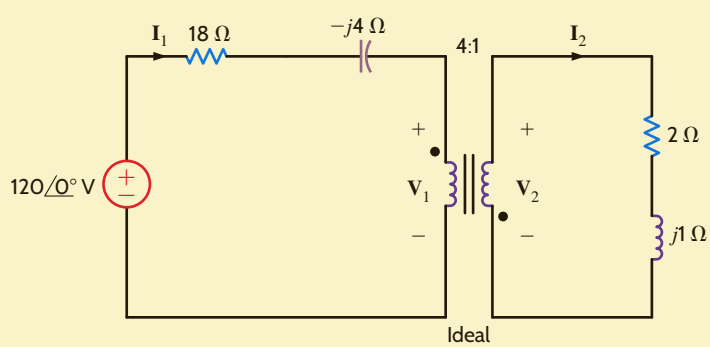

Figure 10.20
Ideal transformer circuit.

SOLUTION

Because of the relationships between the dots and the currents and voltages, the transformer equations are

$$\mathbf{V}_1 = -\frac{\mathbf{V}_2}{n} \quad \text{and} \quad \mathbf{I}_1 = -n\mathbf{I}_2$$

where $n = 1/4$. The reflected impedance at the input to the transformer is

$$\mathbf{Z}_1 = 4^2\mathbf{Z}_L = 16(2 + j1) = 32 + j16\ \Omega$$

Therefore, the current in the source is

$$\mathbf{I}_1 = \frac{120\underline{/0^\circ}}{18 - j4 + 32 + j16} = 2.33\underline{/-13.5^\circ}\,\text{A}$$

The voltage across the input to the transformer is then

$$\begin{aligned}\mathbf{V}_1 &= \mathbf{I}_1\mathbf{Z}_1\\ &= (2.33\underline{/-13.5^\circ})(32 + j16)\\ &= 83.49\underline{/13.07^\circ}\ \text{V}\end{aligned}$$

Hence, $\mathbf{V}_2$ is

$$\begin{aligned}\mathbf{V}_2 &= -n\mathbf{V}_1\\ &= -\frac{1}{4}(83.49\underline{/13.07^\circ})\\ &= 20.87\underline{/193.07^\circ}\ \text{V}\end{aligned}$$

The current $\mathbf{I}_2$ is

$$\begin{aligned}\mathbf{I}_2 &= -\frac{\mathbf{I}_1}{n}\\ &= -4(2.33\underline{/-13.5^\circ})\\ &= 9.33\underline{/166.50^\circ}\,\text{A}\end{aligned}$$

LEARNING ASSESSMENTS

E10.9 Compute the current $\mathbf{I}_1$ in the network in Fig. E10.9.

ANSWER:
$\mathbf{I}_1 = 3.07\underline{/39.81^\circ}$ A.

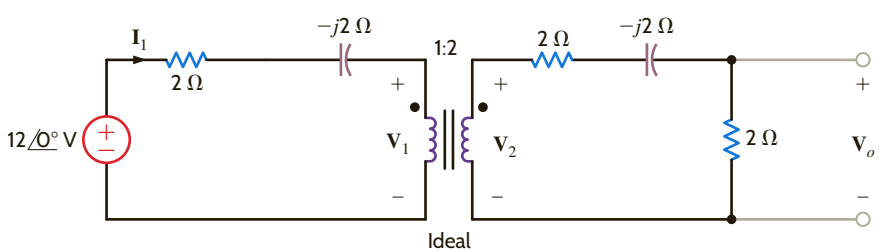

Figure E10.9

E10.10 Find $\mathbf{V}_o$ in the network in Fig. E10.9.

ANSWER:
$\mathbf{V}_o = 3.07\underline{/39.81^\circ}$ V.

E10.11 Determine $\mathbf{I}_1$, $\mathbf{I}_2$, $\mathbf{V}_1$, and $\mathbf{V}_2$ in Fig. E10.11.

ANSWER:
$\mathbf{I}_1 = 2.12\underline{/-25.6^\circ}$ A;
$\mathbf{I}_2 = 8.49\underline{/154.42^\circ}$ A;
$\mathbf{V}_1 = 64.16\underline{/44.1^\circ}$ V;
$\mathbf{V}_2 = 16.04\underline{/-135.9^\circ}$ V.

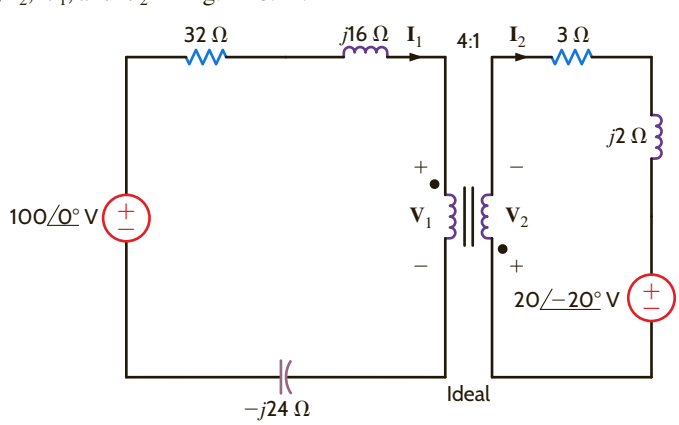

Figure E10.11

E10.12 Determine $\mathbf{V}_o$ in Fig. E10.12.

ANSWER:
$\mathbf{V}_o = 24.95\underline{/-62.65^\circ}$ V.

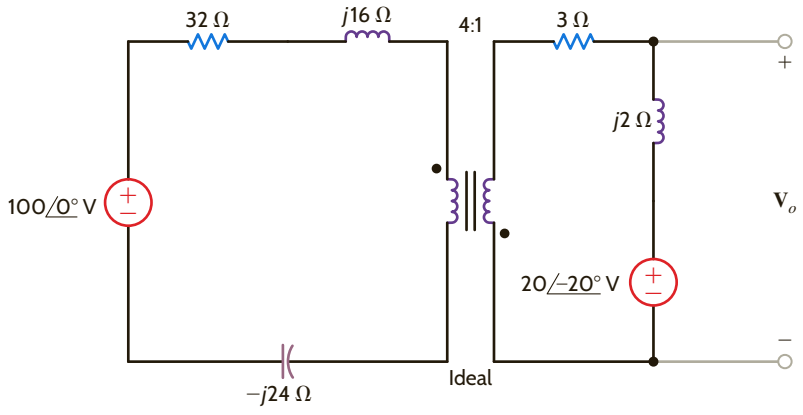

Figure E10.12

E10.13 Determine $\mathbf{V}_o$ in Fig. E10.13.

ANSWER:
$\mathbf{V}_o = 93.68\underline{/-83^\circ}$ V.

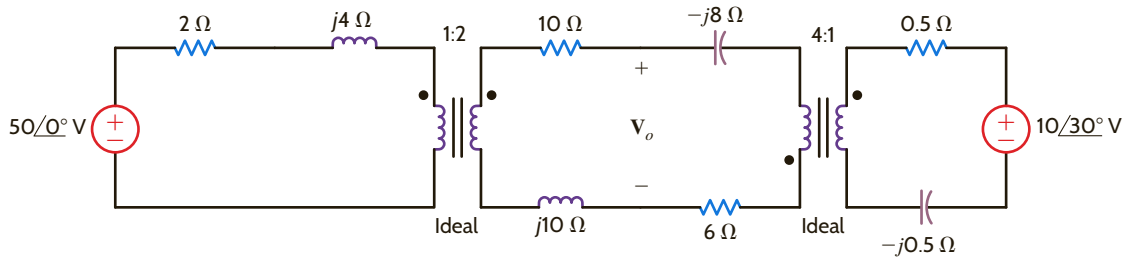

Figure E10.13

E10.14 If $\mathbf{V}_o = 10\underline{/30^\circ}$ V in Fig. E10.14, find $\mathbf{V}_S$.

ANSWER:
$\mathbf{V}_S = 32.34\underline{/-125.3^\circ}$ V.

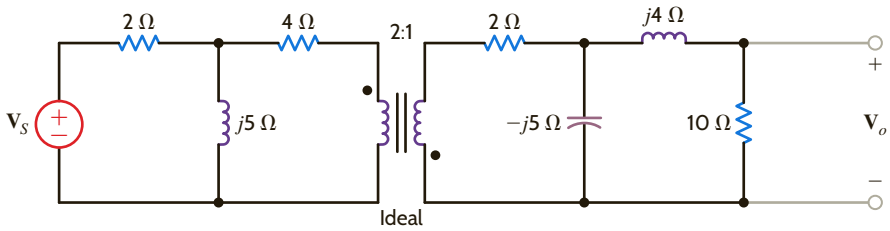

Figure E10.14

EXAMPLE 10.9

The local transformer in Fig. 10.21 provides the last voltage stepdown in a power distribution system. A common sight on utility poles in residential areas, it is a single-phase transformer that typically has a 13.8-kV rms line to neutral on its primary coil, and a center tap secondary coil provides both 120 V rms and 240 V rms to service several residences. A typical example of this transformer, often referred to as a *pole pig*, is shown in Fig. 10.22.

Let us find the turns ratio necessary to produce the 240-V rms secondary voltage. Assuming that the transformer provides 200-A rms service to each of 10 houses, let us determine the minimum power rating for the transformer and the maximum current in the primary.

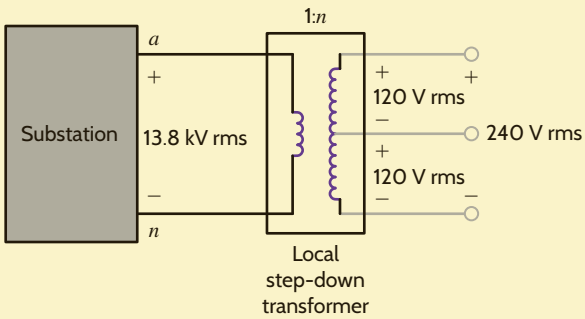

Figure 10.21
Local transformer subcircuit with center tap.

SOLUTION

The turns ratio is given by

$$n = \frac{V_2}{V_1} = \frac{240}{13{,}800} = \frac{1}{57.5}$$

If I_H is the maximum current per household, then the maximum primary current is

$$I_1 = nI_2 = n(10I_H) = 34.78 \text{ A rms}$$

The maximum power delivered to the primary is then

$$S_1 = V_1 I_1 = (13{,}800)(34.78) = 480 \text{ kVA}$$

Therefore, the transformer must have a power rating of at least 480 kVA.

Figure 10.22
A residential utility transformer (©tomba/iStockphoto).

Another technique for simplifying the analysis of circuits containing an ideal transformer involves the use of either Thévenin's or Norton's theorem to obtain an equivalent circuit that replaces the transformer and either the primary or secondary circuit. This technique usually requires more effort, however, than the approach presented thus far. Let us demonstrate this approach by employing Thévenin's theorem to derive an equivalent circuit for the transformer and primary circuit of the network shown in **Fig. 10.23a**. The equations for the transformer in view of the direction of the currents and voltages and the position of the dots are

$$\mathbf{I}_1 = n\mathbf{I}_2$$

$$\mathbf{V}_1 = \frac{\mathbf{V}_2}{n}$$

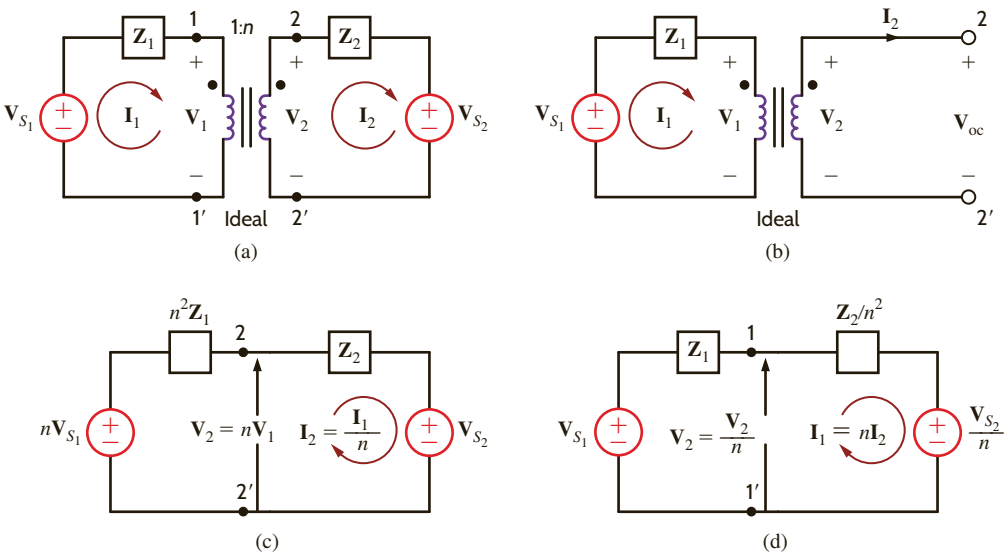

Figure 10.23

Circuit containing an ideal transformer and some of its equivalent networks.

Forming a Thévenin equivalent at the secondary terminals $2 = 2'$, as shown in **Fig. 10.23b**, we note that $\mathbf{I}_2 = 0$ and therefore $\mathbf{I}_1 = 0$. Hence,

$$\mathbf{V}_{oc} = \mathbf{V}_2 = n\mathbf{V}_1 = n\mathbf{V}_{S_1}$$

The Thévenin equivalent impedance obtained by looking into the open-circuit terminals with $\mathbf{V}_{S_1}$ replaced by a short circuit is $\mathbf{Z}_1$, which when reflected into the secondary by the turns ratio is

$$\mathbf{Z}_{Th} = n^2\mathbf{Z}_1$$

Therefore, one of the resulting equivalent circuits for the network in Fig. 10.23a is as shown in **Fig. 10.23c**. In a similar manner, we can show that replacing the transformer and its secondary circuit by an equivalent circuit results in the network shown in **Fig. 10.23d**.

It can be shown in general that when developing an equivalent circuit for the transformer and its primary circuit, each primary voltage is multiplied by n, each primary current is divided by n, and each primary impedance is multiplied by n^2. Similarly, when developing an equivalent circuit for the transformer and its secondary circuit, each secondary voltage is divided by n, each secondary current is multiplied by n, and each secondary impedance is divided by n^2. Powers are the same, whether calculated on the primary or secondary side.

Recall from our previous analysis that if either dot on the transformer is reversed, then n is replaced by $-n$ in the equivalent circuits. In addition, note that the development of these equivalent circuits is predicated on the assumption that removing the transformer will divide the network into two parts; that is, there are no connections between the primary and secondary other than through the transformer. If any external connections exist, the equivalent circuit technique cannot in general be used. Finally, we point out that if the primary or secondary circuits are more complicated than those shown in Fig. 10.23a, Thévenin's theorem may be applied to reduce the network to that shown in Fig. 10.23a. Also, we can simply reflect the complicated circuit component by component from one side of the transformer to the other.

EXAMPLE 10.10

Given the circuit in **Fig. 10.24a**, we wish to draw the two networks obtained by replacing the transformer and the primary, and the transformer and the secondary, with equivalent circuits.

SOLUTION

Due to the relationship between the assigned currents and voltages and the location of the dots, the network containing an equivalent circuit for the primary and the network containing an equivalent circuit for the secondary are shown in **Figs. 10.24b** and **c**, respectively. The reader should note carefully the polarity of the voltage sources in the equivalent networks.

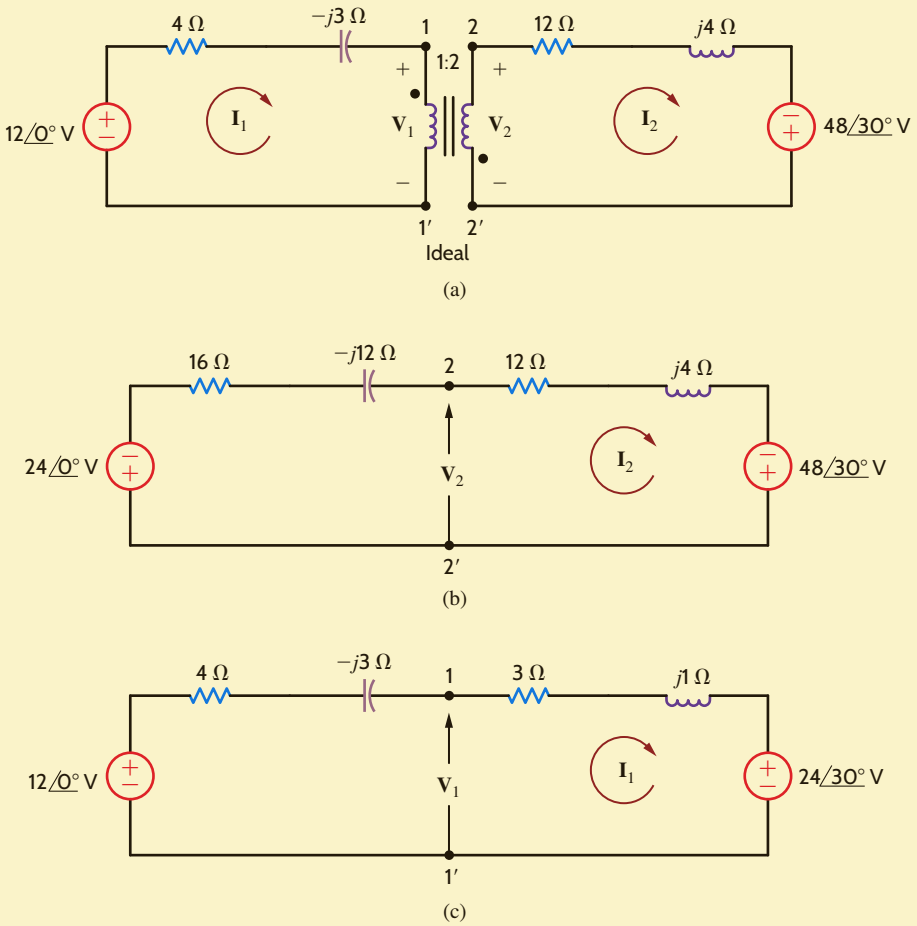

Figure 10.24
Example circuit and two equivalent circuits.

PROBLEM-SOLVING STRATEGY

CIRCUITS CONTAINING IDEAL TRANSFORMERS

STEP 1. Carefully examine the circuit diagram to determine the assigned voltage polarities and current directions in relation to the transformer dots.

- If both voltages are referenced positive at the dotted terminals or undotted terminals, then $v_1/v_2 = N_1/N_2$. If this is not true, then $v_1/v_2 = -N_1/N_2$.
- If one current is defined as entering a dotted terminal and the other current is defined as leaving a dotted terminal, then $N_1 i_1 = N_2 i_2$. If this condition is not satisfied, then $N_1 i_1 = -N_2 i_2$.

STEP 2. If there are no electrical connections between two transformer windings, reflect all circuit elements on one side of the transformer through to the other side, thus eliminating the ideal transformer. Be careful to apply the statements above when reflecting elements through the transformer. Remember that impedances are scaled in magnitude only. Apply circuit analysis techniques to the circuit that results from eliminating all ideal transformers. After this circuit has been analyzed, reflect voltages and currents back through the appropriate ideal transformers to find the answer.

STEP 3. As an alternative approach, use Thévenin's or Norton's theorem to simplify the circuit. Typically, calculation of the equivalent circuit eliminates the ideal transformer. Solve the simplified circuit.

STEP 4. If there are electrical connections between two transformer windings, use nodal analysis or mesh analysis to write equations for the circuits. Solve the equations using the proper relationships between the voltages and currents for the ideal transformer.

EXAMPLE 10.11

Let us determine the output voltage $\mathbf{V}_o$ in the circuit in Fig. 10.25a.

SOLUTION

We begin our attack by forming a Thévenin equivalent for the primary circuit. From Fig. 10.25b we can show that the open-circuit voltage is

$$\mathbf{V}_{oc} = \frac{24\angle 0^\circ}{4 - j4}(-j4) - 4\angle -90^\circ$$
$$= 12 - j8 = 14.42\angle -33.69^\circ \text{ V}$$

The Thévenin equivalent impedance looking into the open-circuit terminals with the voltage sources replaced by short circuits is

$$\mathbf{Z}_{Th} = \frac{(4)(-j4)}{4 - j4} + 2$$
$$= 4 - j2\ \Omega$$

The circuit in Fig. 10.25a thus reduces to that shown in Fig. 10.25c. Forming an equivalent circuit for the transformer and primary results in the network shown in Fig. 10.25d.

Therefore, the voltage $\mathbf{V}_o$ is

$$\mathbf{V}_o = \frac{-28.84\angle -33.69^\circ}{20 - j5}(2)$$
$$= 2.80\angle 160.35^\circ \text{ V}$$

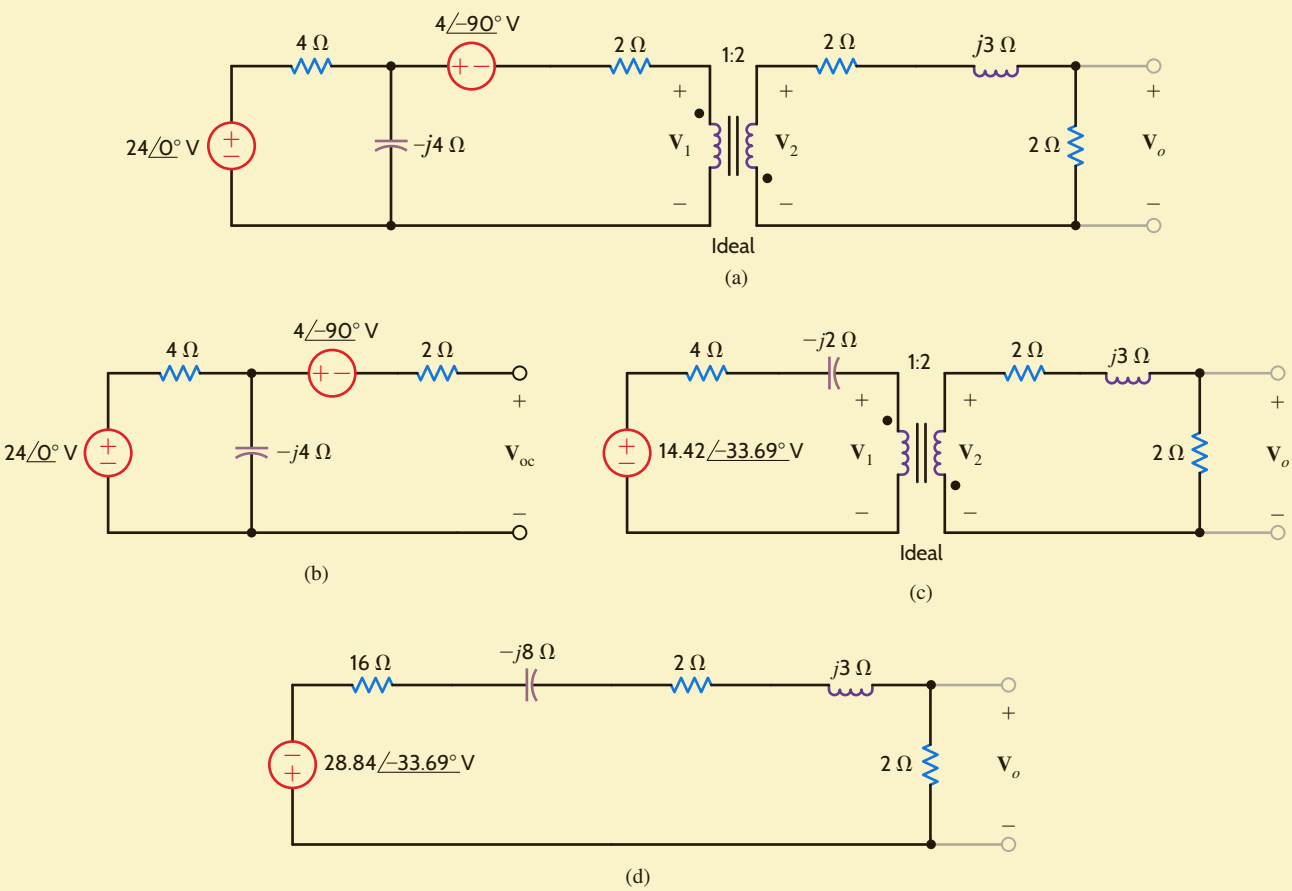

Figure 10.25

Example network and other circuits used to derive an equivalent network.

LEARNING ASSESSMENTS

E10.15 Given the network in Fig. E10.15, form an equivalent circuit for the transformer and secondary, and use the resultant network to compute $\mathbf{I}_1$.

ANSWER:
$\mathbf{I}_1 = 13.12\angle 38.66^\circ$ A.

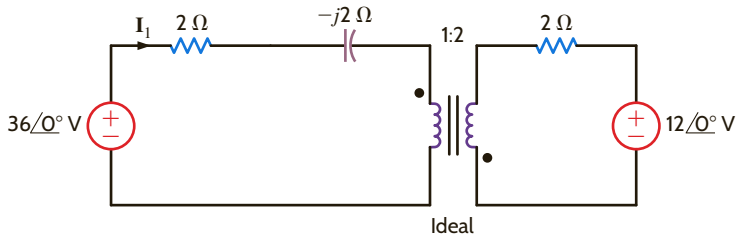

Figure E10.15

E10.16 Given the network in Fig. E10.16, form an equivalent circuit for the transformer and primary, and use the resultant network to find $\mathbf{V}_o$.

ANSWER:
$\mathbf{V}_o = 3.12\angle 38.66^\circ$ V.

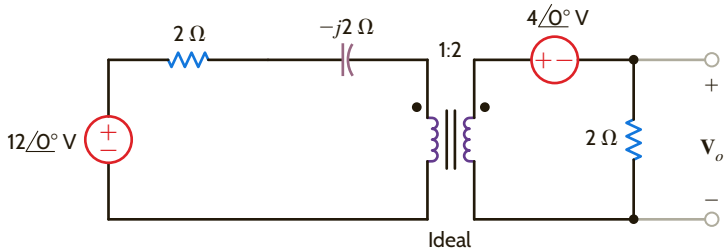

Figure E10.16

EXAMPLE 10.12

Determine $\mathbf{I}_1$, $\mathbf{I}_2$, $\mathbf{V}_1$, and $\mathbf{V}_2$ in the network in Fig. 10.26.

SOLUTION

The nodal equations at nodes 1 and 2 are

$$\frac{10 - \mathbf{V}_1}{2} = \frac{\mathbf{V}_1 - \mathbf{V}_2}{2} + \mathbf{I}_1$$

$$\mathbf{I}_2 + \frac{\mathbf{V}_1 - \mathbf{V}_2}{2} = \frac{\mathbf{V}_2}{2j}$$

The transformer relationships are $\mathbf{V}_2 = 2\mathbf{V}_1$ and $\mathbf{I}_1 = 2\mathbf{I}_2$. The first nodal equation yields $\mathbf{I}_1 = 5$ A and therefore $\mathbf{I}_2 = 2.5$ A. The second nodal equation, together with the constraint equations specified by the transformer, yields $\mathbf{V}_1 = \sqrt{5}\angle 63^\circ$ V and $\mathbf{V}_2 = 2\sqrt{5}\angle 63^\circ$ V.

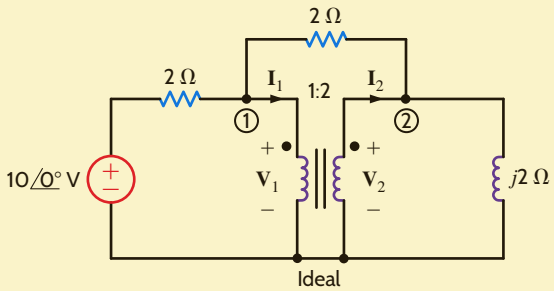

Figure 10.26
Circuit used in Example 10.12.

LEARNING ASSESSMENT

E10.17 Determine $\mathbf{I}_1$, $\mathbf{I}_2$, $\mathbf{V}_1$, and $\mathbf{V}_2$ in the network in Fig. E10.17.

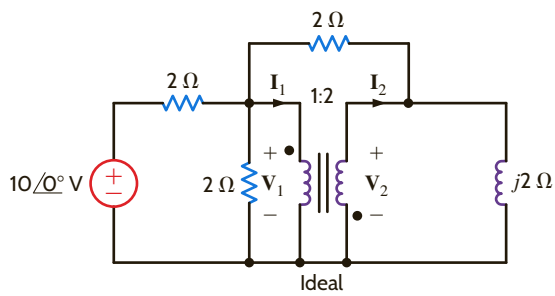

Figure E10.17

ANSWER:
$\mathbf{I}_1 = 3.08\angle{-13.7^\circ}$ A;
$\mathbf{I}_2 = 1.54\angle{166.3^\circ}$ A;
$\mathbf{V}_1 = 0.85\angle{20^\circ}$ V;
$\mathbf{V}_2 = 1.71\angle{-160^\circ}$ V.

Before we move on to the next topic, let's return to Faraday's law. For the ideal transformer, Faraday's law tells us that $v_1(t) = N_1\frac{d\phi}{dt}$ and $v_2(t) = N_2\frac{d\phi}{dt}$. What if a dc voltage is applied to our transformer? In that case, the magnetic flux ϕ is a constant, $v_1 = v_2 = 0$, and our transformer is not very useful. What if an ac voltage is applied to our transformer? The magnetic flux is sinusoidal and time-varying. Transformers allow the ac voltage value to be stepped up or down easily and efficiently; it is much more difficult to efficiently step up or down the dc voltage value. The ease with which transformers allow us to change the voltage level is one of the main reasons that ac voltages and currents are utilized to transmit the bulk of the world's electrical power.

10.4 Safety Considerations

Transistors are used extensively in modern electronic equipment to provide a low-voltage power supply. As examples, a common voltage level in computer systems is 5 V dc, portable radios use 9 V dc, and military and airplane equipment operates at 28 V dc. When transformers are used to connect these low-voltage transistor circuits to the power line, there is generally less danger of shock within the system because the transformer provides electrical isolation from the line voltage. However, from a safety standpoint, a transformer, although helpful in many situations, is not an absolute solution. When working with any electrical equipment, we must always be vigilant to minimize the dangers of electrical shock.

In power electronics equipment or power systems, the danger is severe. The problem in these cases is that of high voltage from a low-impedance source, and we must constantly remember that the line voltage in our homes can be lethal.

Consider now the following example, which illustrates a hidden danger that could surprise even the experienced professional, with devastating consequences.

EXAMPLE 10.13

Two adjacent homes, *A* and *B*, are fed from different transformers, as shown in **Fig. 10.27a**. A surge on the line feeding house *B* has caused the circuit breaker *X-Y* to open. House *B* is now left without power. In an attempt to help his neighbor, the resident of house *A* volunteers to connect a specialized extension cord between a wall plug in house *A* and a wall plug in house *B*, as shown in **Fig. 10.27b**. Later, the line technician from the utility company comes to reconnect the circuit breaker. Is the line technician in any danger in this situation?

SOLUTION

Unaware of the extension cord connection, the line technician believes that there is no voltage between points X and Z. However, because of the electrical connection between the two homes, 7200 V rms exists between the two points, and the line technician could be seriously injured or even killed if he comes in contact with this high voltage.

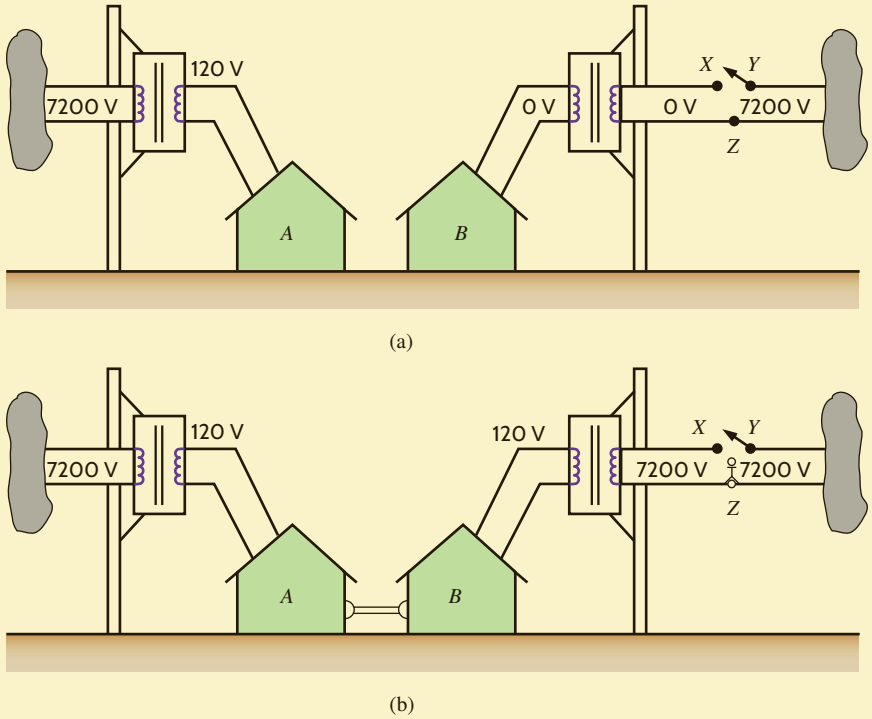

Figure 10.27
Diagrams used in Example 10.13 (voltages in rms).

SUMMARY

- ***Mutual inductance*** Mutual inductance occurs when inductors are placed in close proximity to one another and share a common magnetic flux.
- ***The dot convention for mutual inductance*** The dot convention governs the sign of the induced voltage in one coil based on the current direction in another.
- ***The relationship between the mutual inductance and self-inductance of two coils*** An energy analysis indicates that $M = k\sqrt{L_1 L_2}$, where k, the coefficient of coupling, has a value between 0 and 1.
- ***The ideal transformer*** An ideal transformer has infinite core permeability and winding conductance. The voltage and current can be transformed between the primary and secondary ends based on the ratio of the number of winding turns between the primary and secondary.
- ***The dot convention for an ideal transformer*** The dot convention for ideal transformers, like that for mutual inductance, specifies the manner in which a current in one winding induces a voltage in another winding.
- ***Equivalent circuits involving ideal transformers*** Based on the location of the circuits' unknowns, either the primary or secondary can be reflected to the other side of the transformer to form a single circuit containing the desired unknown. The reflected voltages, currents, and impedances are a function of the dot convention and turns ratio.

PROBLEMS

10.1 Given the network in Fig. P10.1,

(a) write the equations for $v_a(t)$ and $v_b(t)$.

(b) write the equations for $v_c(t)$ and $v_d(t)$.

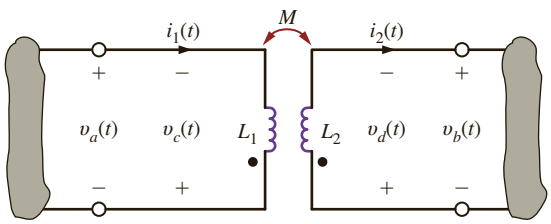

Figure P10.1

10.2 Given the network in Fig. P10.2,

(a) find the equations for $v_a(t)$ and $v_b(t)$.

(b) find the equations for $v_c(t)$ and $v_d(t)$.

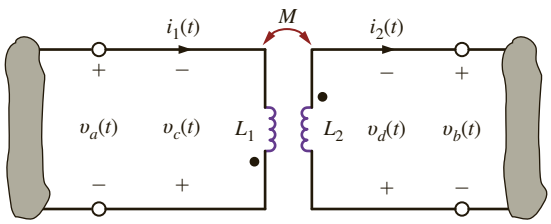

Figure P10.2

10.3 Given the network in Fig. P10.3,

(a) find the equations for $v_a(t)$ and $v_b(t)$.

(b) find the equations for $v_c(t)$ and $v_d(t)$.

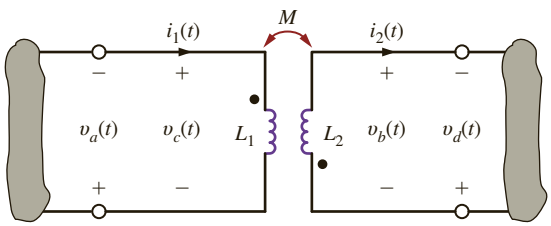

Figure P10.3

10.4 Given the network in Fig. P10.4,

(a) write the equations for $v_a(t)$ and $v_b(t)$.

(b) write the equations for $v_c(t)$ and $v_d(t)$.

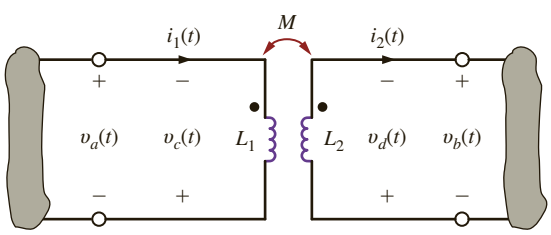

Figure P10.4

10.5 Find $\mathbf{I}_o$ in the network in Fig. P10.5.

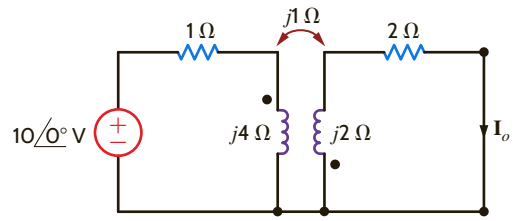

Figure P10.5

10.6 Find $\mathbf{V}_o$ in the network in Fig. P10.6.

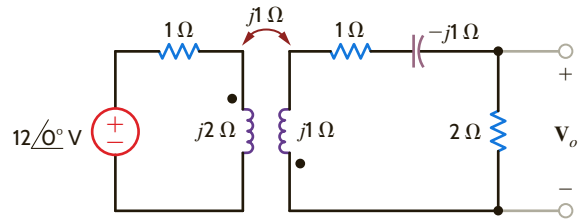

Figure P10.6

10.7 Find $\mathbf{V}_o$ in the circuit in Fig. P10.7.

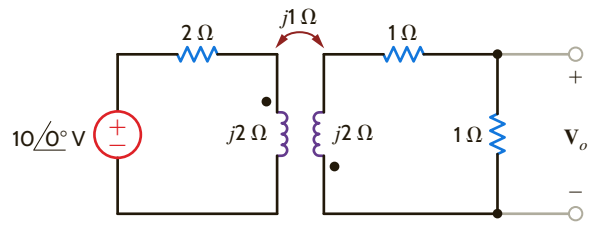

Figure P10.7

10.8 Write the mesh equations for the network in Fig. P10.8 and determine $\mathbf{V}_o/\mathbf{V}_1$.

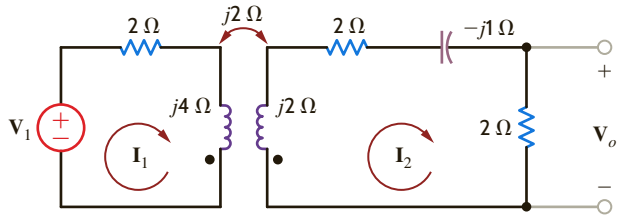

Figure P10.8

10.9 Find $\mathbf{V}_o$ in the circuit in Fig. P10.9.

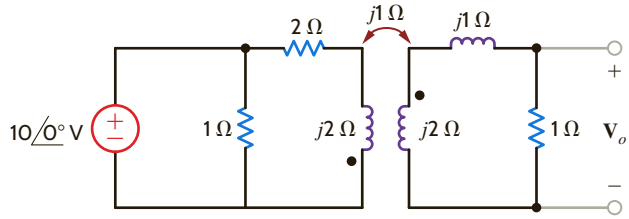

Figure P10.9

10.10 Find $\mathbf{V}_o$ in the network in Fig. P10.10.

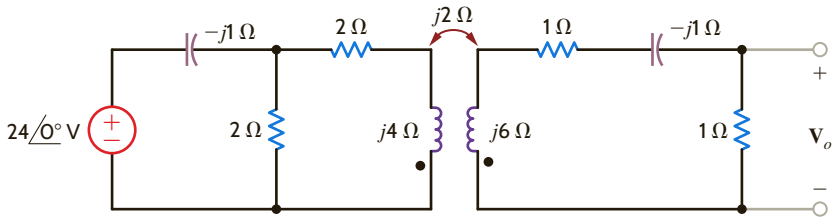

Figure P10.10

10.11 Find $\mathbf{V}_o$ in the circuit in Fig. P10.11.

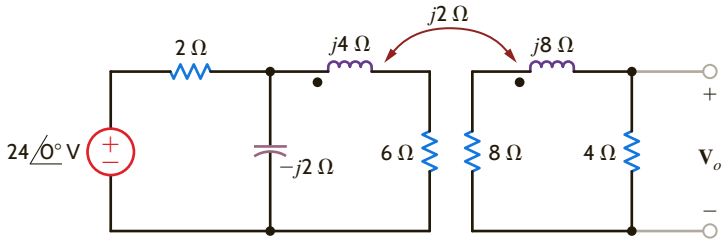

Figure P10.11

10.12 Find $\mathbf{V}_o$ in the circuit in Fig. P10.12.

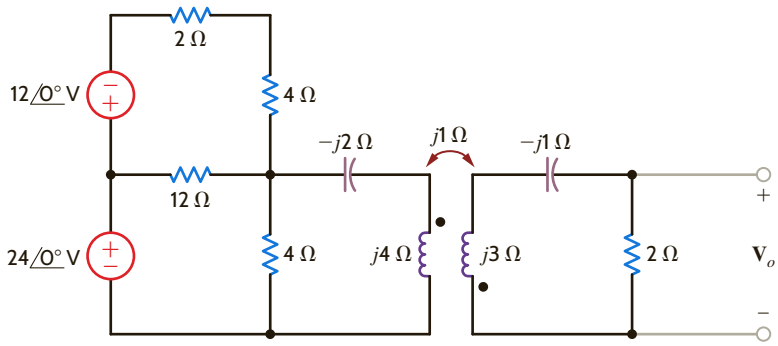

Figure P10.12

10.13 Find $\mathbf{V}_o$ in the network in Fig. P10.13.

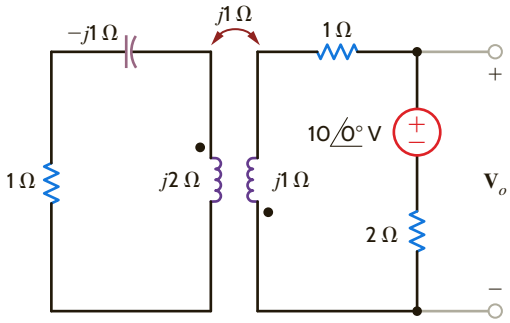

Figure P10.13

10.15 Find $\mathbf{V}_o$ in the network in Fig. P10.15.

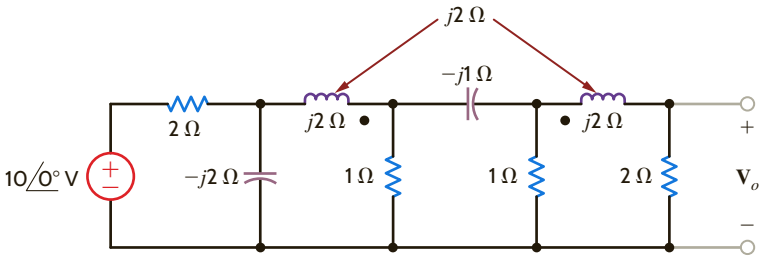

Figure P10.15

10.14 Find $\mathbf{I}_o$ in the circuit in Fig. P10.14.

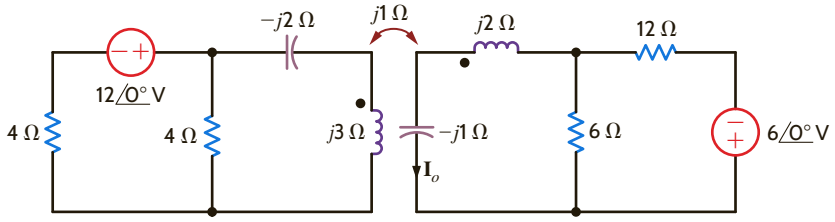

Figure P10.14

10.16 Determine $\mathbf{I}_o$ in the network in Fig. P10.16.

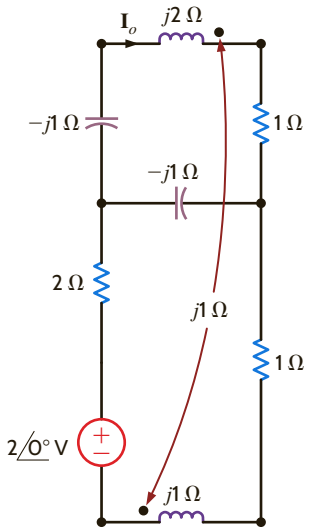

Figure P10.16

10.17 Find $\mathbf{V}_o$ in the network in Fig. P10.17.

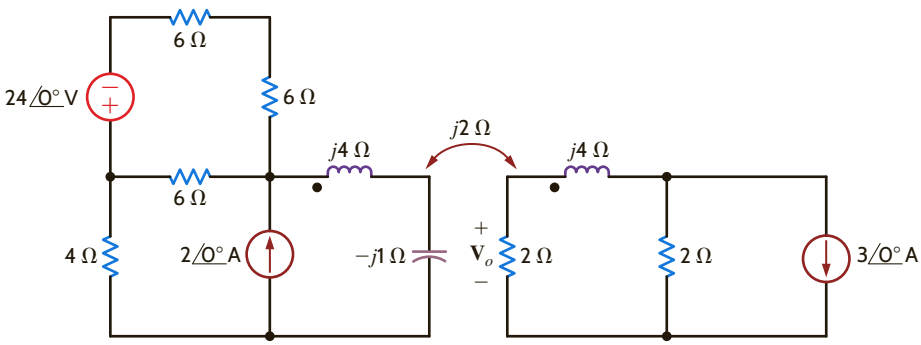

Figure P10.17

10.18 Find $\mathbf{V}_o$ in the network in Fig. P10.18.

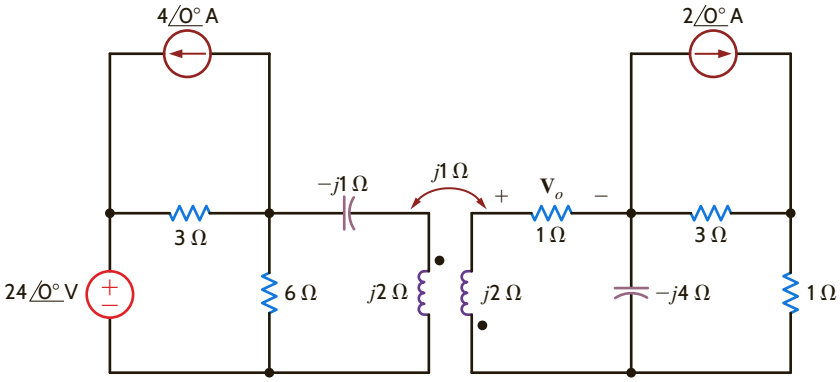

Figure P10.18

10.19 Determine the impedance seen by the source in the network shown in Fig. P10.19.

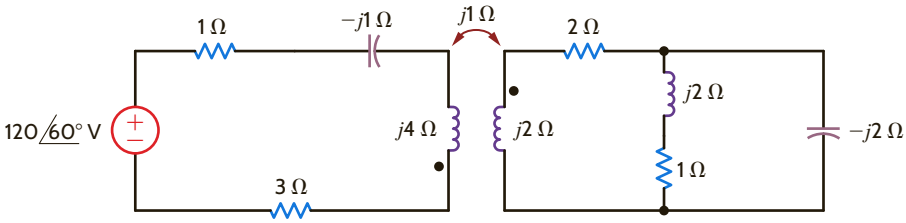

Figure P10.19

10.20 Compute the input impedance of the network in Fig. P10.20.

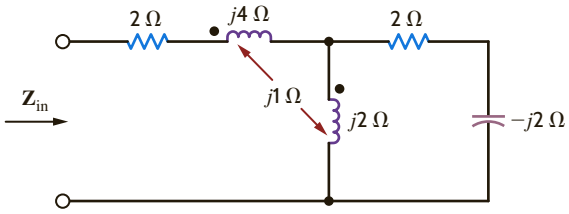

Figure P10.20

10.21 Find $\mathbf{I}_o$ in the circuit in Fig. P10.21.

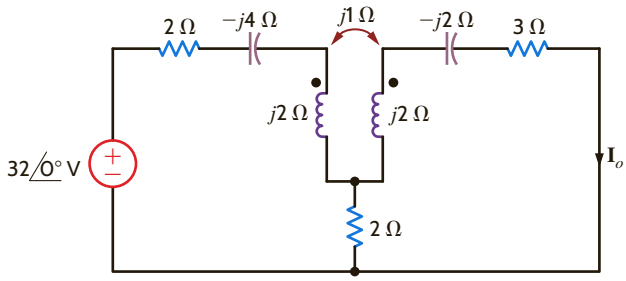

Figure P10.21

10.22 Find $\mathbf{V}_o$ in the network in Fig. P10.22.

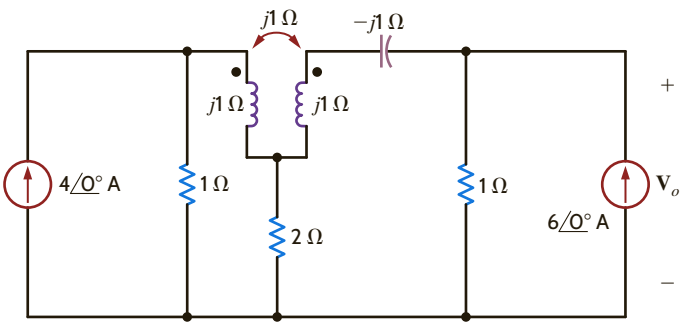

Figure P10.22

10.23 Find $\mathbf{I}_o$ in the circuit in Fig. P10.23.

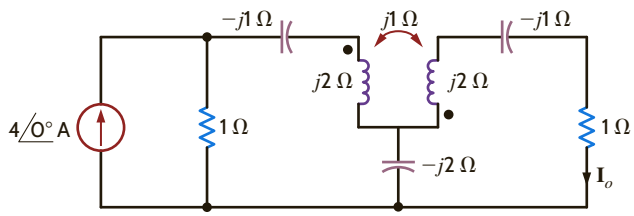

Figure P10.23

10.24 Find $\mathbf{V}_o$ in the network in Fig. P10.24.

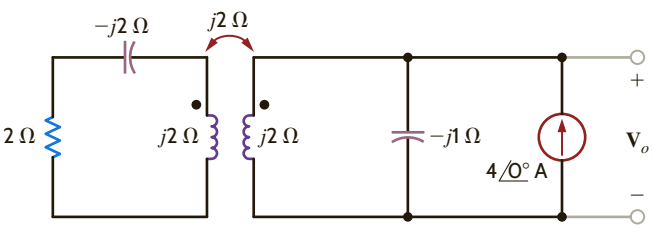

Figure P10.24

10.25 Determine the impedance seen by the source in the network shown in Fig. P10.25.

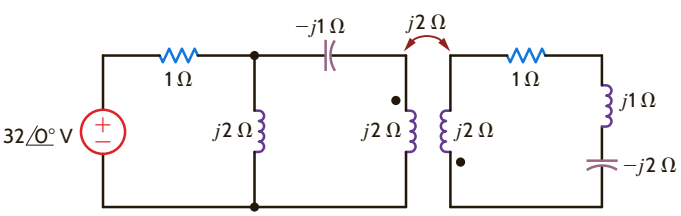

Figure P10.25

10.26 Find $\mathbf{V}_o$ in the network in Fig. P10.26.

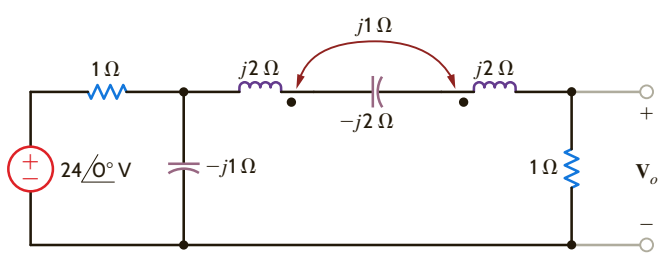

Figure P10.26

10.27 Find $\mathbf{V}_o$ in the network in Fig. P10.27.

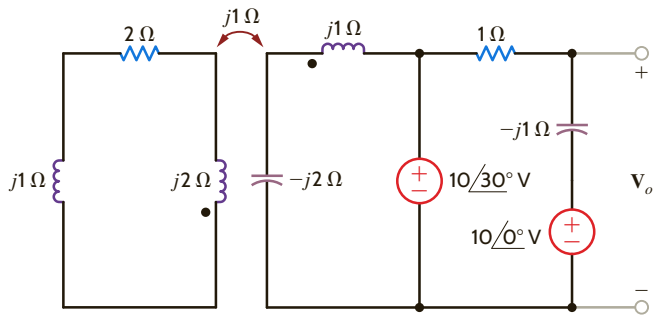

Figure P10.27

10.28 Find $\mathbf{V}_o$ in the network in Fig. P10.28.

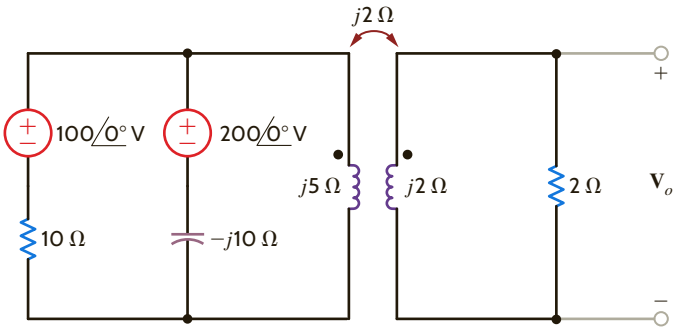

Figure P10.28

10.29 Find $\mathbf{V}_o$ in the network in Fig. P10.29.

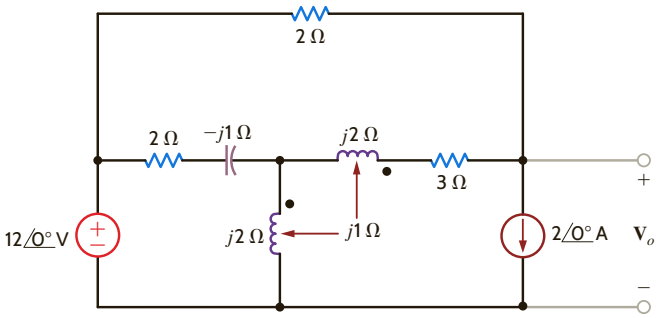

Figure P10.29

10.30 Find $\mathbf{V}_o$ in the network in Fig. P10.30.

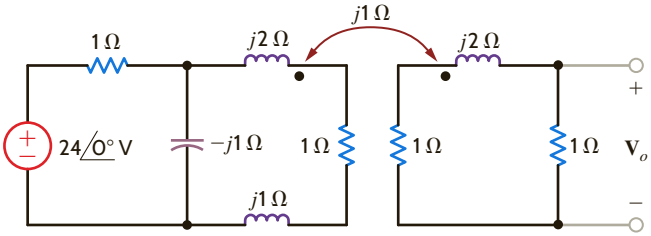

Figure P10.30

10.31 Find $\mathbf{V}_o$ in the circuit in Fig. P10.31.

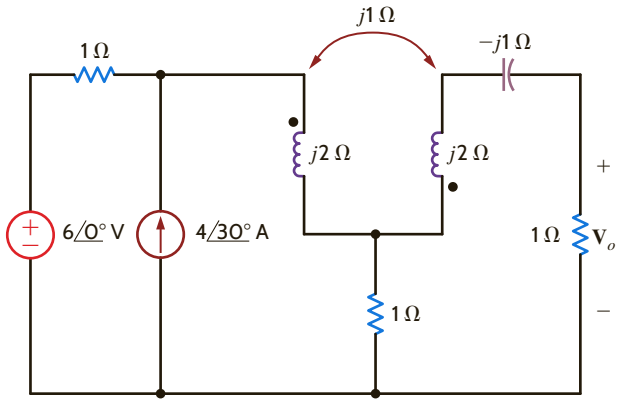

Figure P10.31

10.32 Determine the input impedance $\mathbf{Z}_{in}$ of the circuit in Fig. P10.32.

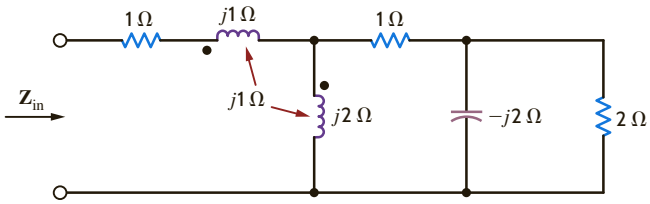

Figure P10.32

10.33 Determine the input impedance of the network shown in Fig. P10.33.

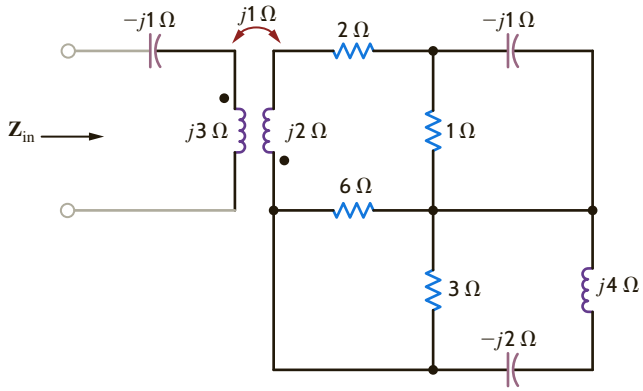

Figure P10.33

10.34 Two coils are positioned such that there is 90% coupling between them. If the inductances of the coils are 10 mH and 20 mH, respectively, find the mutual inductance.

10.35 Two coils in a network are positioned such that there is 100% coupling between them. If the inductance of one coil is 10 mH and the mutual inductance is 6 mH, compute the inductance of the other coil.

10.36 Determine the input impedance $\mathbf{Z}_{in}$ in the network in Fig. P10.36.

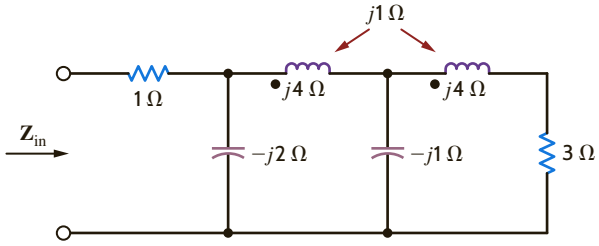

Figure P10.36

10.37 Analyze the network in Fig. P10.37 and determine whether a value of X_C can be found such that the output voltage is equal to twice the input voltage.

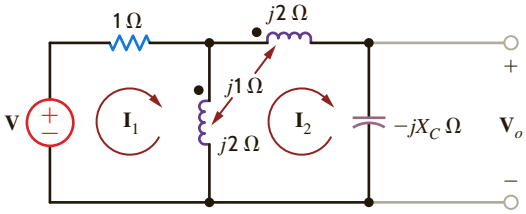

Figure P10.37

10.38 Given the network shown in Fig. P10.38, determine the value of the capacitor C that will cause the impedance seen by the $24\angle 0°$ V voltage source to be purely resistive, $f = 60$ Hz.

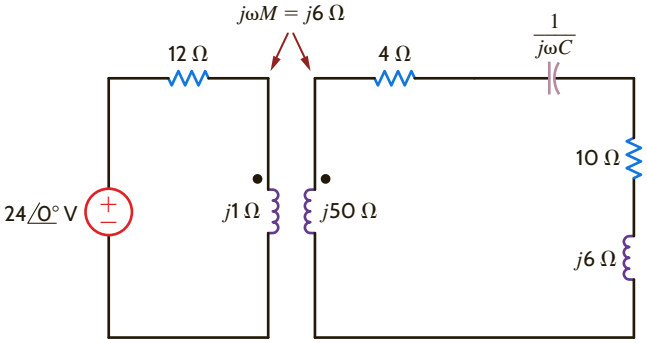

Figure P10.38

10.39 The currents in the magnetically coupled inductors shown in Fig. P10.39 are known to be $i_1(t) = 8\cos(377t - 20°)$ mA and $i_2(t) = 4\cos(377t - 50°)$ mA. The inductor values are $L_1 = 2$ H, $L_2 = 1$ H, and $k = 0.6$. Determine $v_1(t)$ and $v_2(t)$.

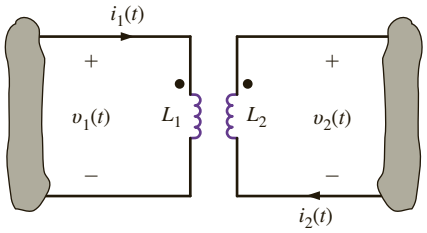

Figure P10.39

10.40 Determine the energy stored in the coupled inductors in Problem 10.39 at $t = 1$ ms.

10.41 The currents in the network in Fig. P10.41 are known to be $i_1(t) = 10\cos(377t - 30°)$ mA and $i_2(t) = 20\cos(377t - 45°)$ mA. The inductances are $L_1 = 2$ H, $L_2 = 2$ H, and $k = 0.8$. Determine $v_1(t)$ and $v_2(t)$.

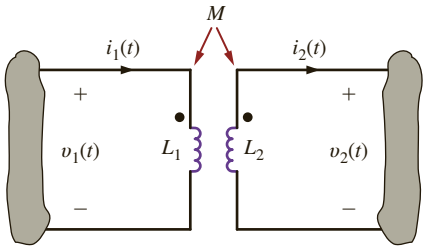

Figure P10.41

10.42 Determine the energy stored in the coupled inductors in the circuit in Fig. P10.41 at $t = 1$ ms.

10.43 Determine $\mathbf{I}_1$, $\mathbf{I}_2$, $\mathbf{V}_1$, and $\mathbf{V}_2$ in the network in Fig. P10.43.

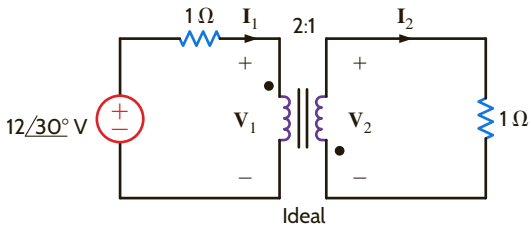

Figure P10.43

10.44 Find all currents and voltages in the network in Fig. P10.44.

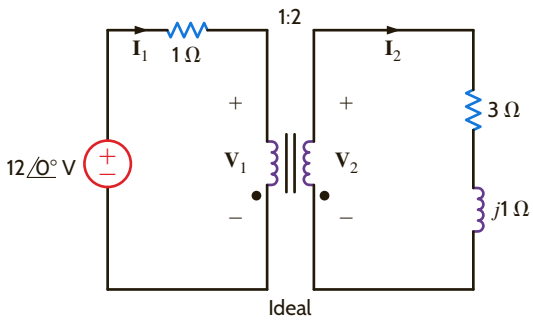

Figure P10.44

10.45 Determine $\mathbf{V}_o$ in the circuit in Fig. P10.45.

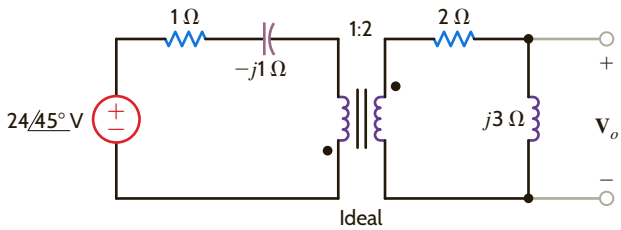

Figure P10.45

10.46 Determine $\mathbf{V}_o$ in the circuit in Fig. P10.46.

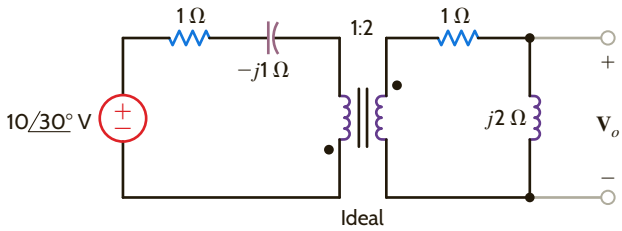

Figure P10.46

10.47 Determine $\mathbf{I}_1$, $\mathbf{I}_2$, $\mathbf{V}_1$, and $\mathbf{V}_2$ in the network in Fig. P10.47.

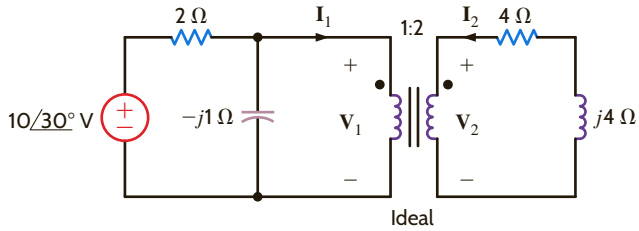

Figure P10.47

10.48 Determine $\mathbf{I}_1$, $\mathbf{I}_2$, $\mathbf{V}_1$, and $\mathbf{V}_2$ in the network in Fig. P10.48.

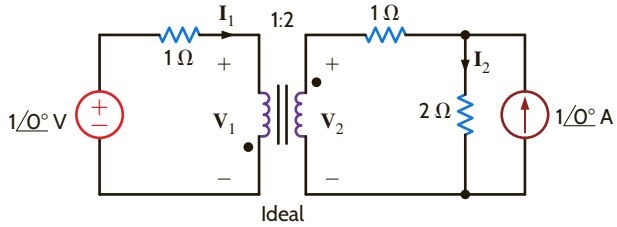

Figure P10.48

10.49 Determine $\mathbf{I}_1$, $\mathbf{I}_2$, $\mathbf{V}_1$, and $\mathbf{V}_2$ in the network in Fig. P10.49.

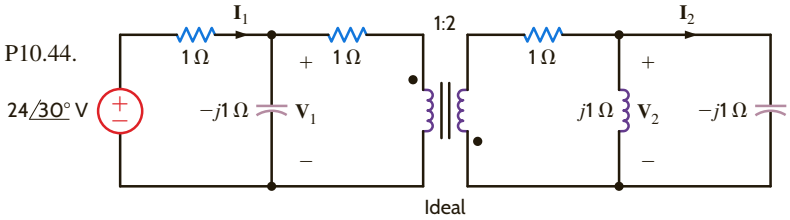

Figure P10.49

10.50 Determine $\mathbf{I}_1$, $\mathbf{I}_2$, $\mathbf{V}_1$, and $\mathbf{V}_2$ in the network in Fig. P10.50.

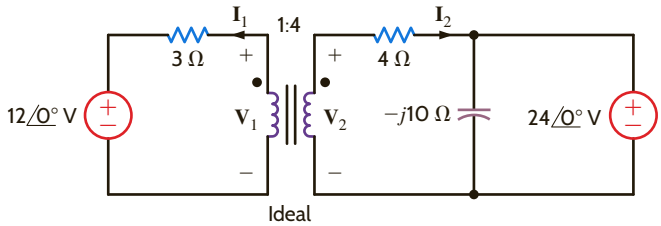

Figure P10.50

10.51 Find the current $\mathbf{I}$ in the network in Fig. P10.51.

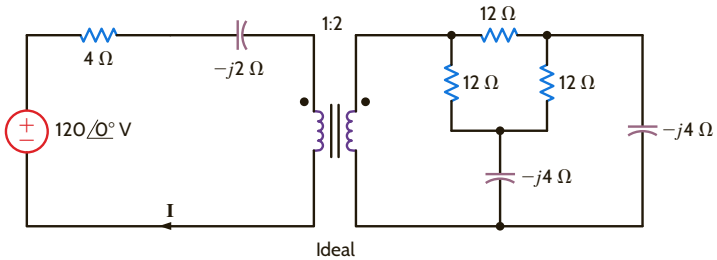

Figure P10.51

10.52 Find $\mathbf{V}_o$ in the circuit in Fig. P10.52.

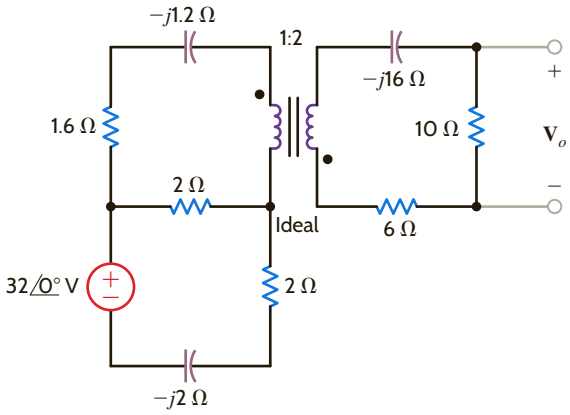

Figure P10.52

10.53 Find $\mathbf{V}_o$ in the network in Fig. P10.53.

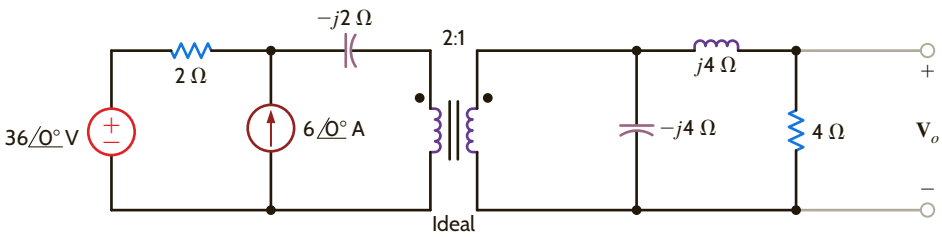

Figure P10.53

10.54 Find $\mathbf{V}_o$ in the circuit in Fig. P10.54.

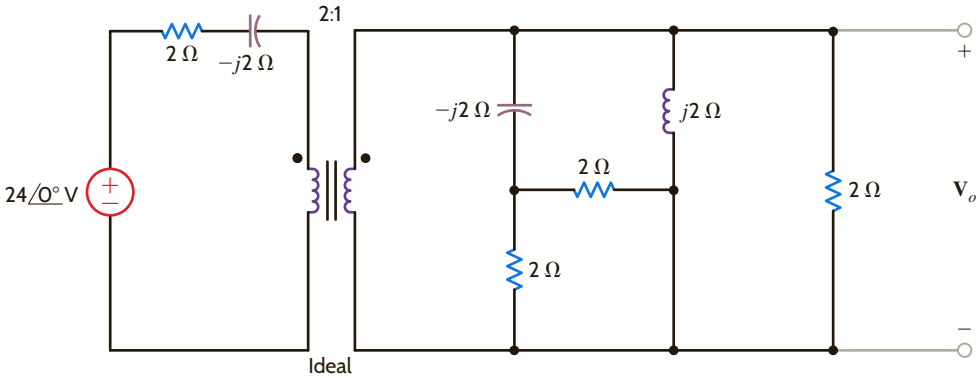

Figure P10.54

10.55 Find $\mathbf{I}_o$ in the network in Fig. P10.55.

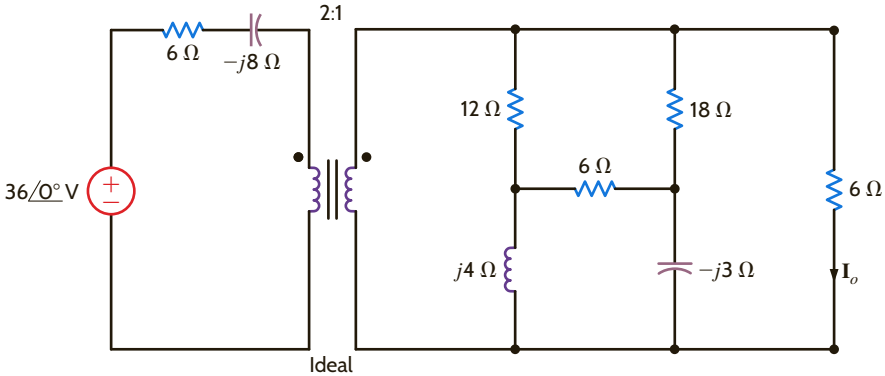

Figure P10.55

10.56 Find $\mathbf{I}_o$ in the circuit in Fig. P10.56.

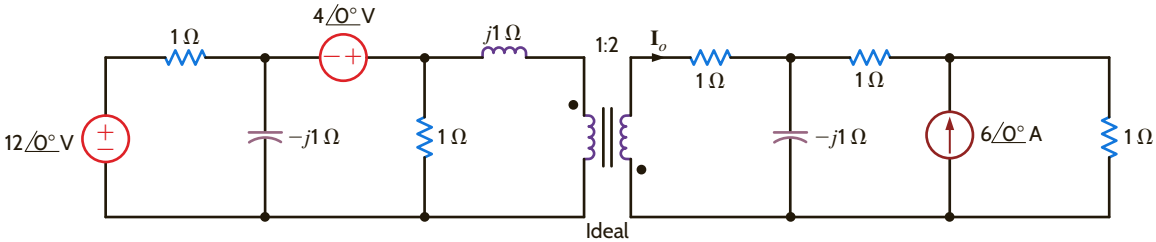

Figure P10.56

10.57 Find **I** in the network in Fig. P10.57.

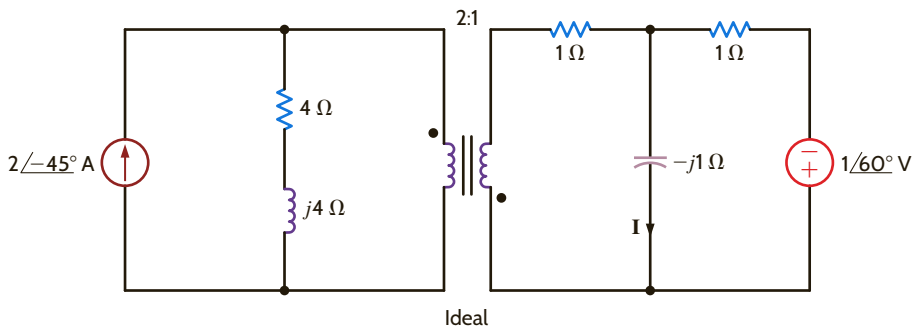

Figure P10.57

10.58 Find $\mathbf{V}_o$ in the network in Fig. P10.58.

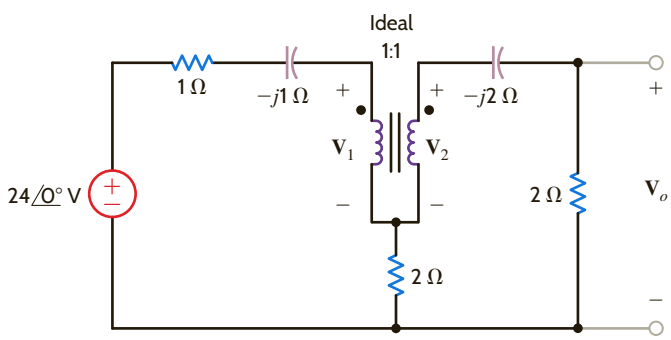

Figure P10.58

10.59 Find $\mathbf{V}_o$ in the network in Fig. P10.59.

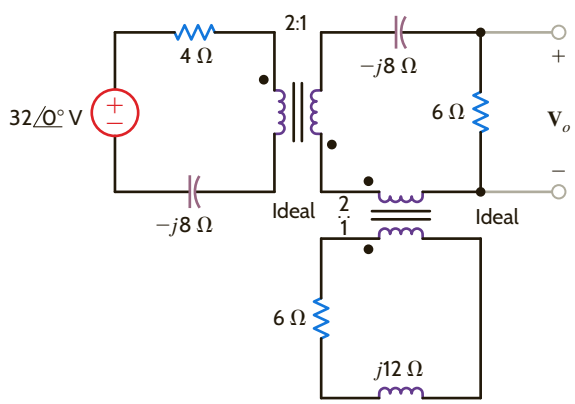

Figure P10.59

10.60 Find $\mathbf{V}_o$ in the circuit in Fig. P10.60.

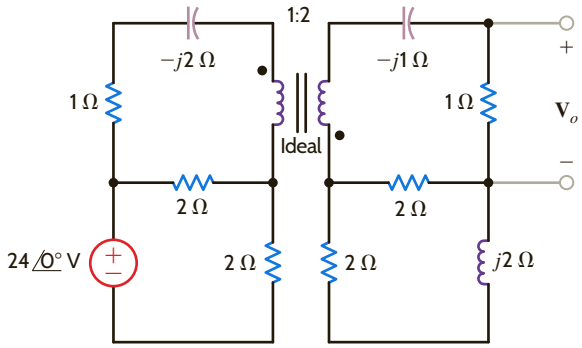

Figure P10.60

10.61 Form an equivalent circuit for the transformer and primary in the network shown in Fig. P10.61, and use this circuit to find the current $\mathbf{I}_2$.

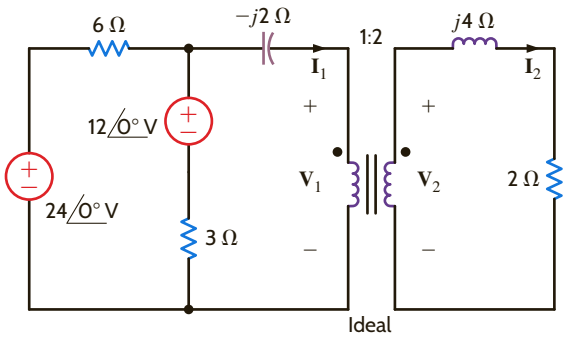

Figure P10.61

10.62 Find **I** in the network in Fig. P10.62.

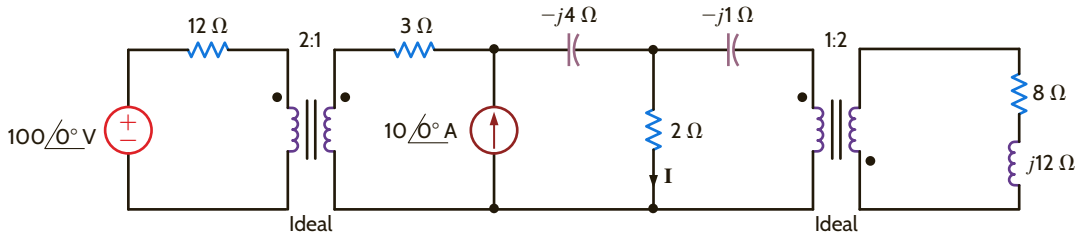

Figure P10.62

10.63 Determine the input impedance seen by the source in the circuit in Fig. P10.63.

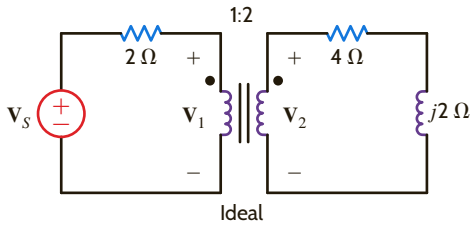

Figure P10.63

10.64 Determine the input impedance seen by the source in the network shown in Fig. P10.64.

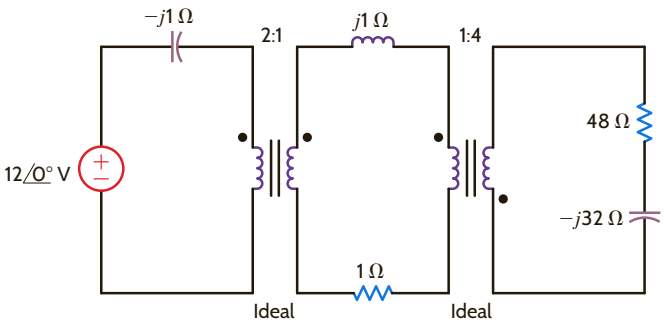

Figure P10.64

10.65 Find the voltage $\mathbf{V}_o$ in the network in Fig. P10.65.

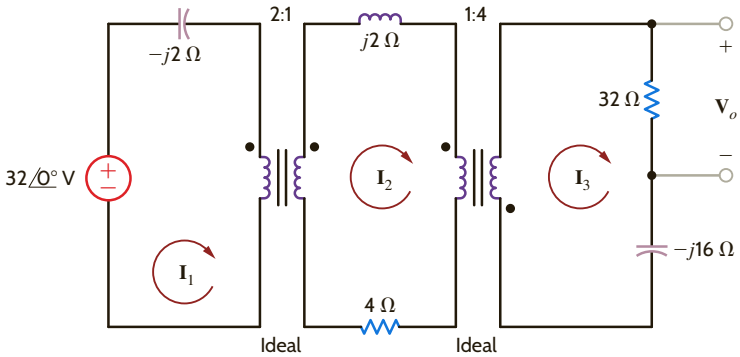

Figure P10.65

10.66 Determine the input impedance seen by the source in the circuit in Fig. P10.66.

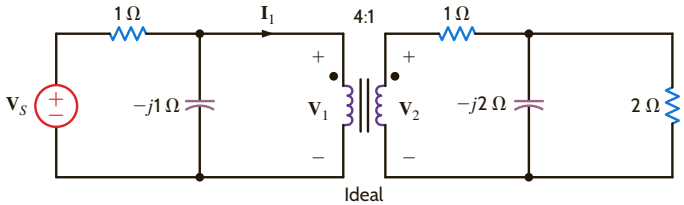

Figure P10.66

10.67 Determine the input impedance seen by the source in the network shown in Fig. P10.67.

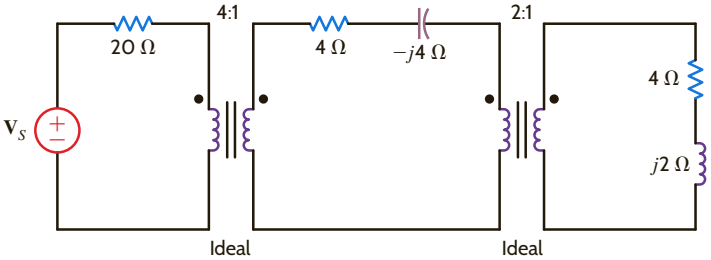

Figure P10.67

10.68 The output stage of an amplifier in an old radio is to be matched to the impedance of a speaker, as shown in Fig. P10.68. If the impedance of the speaker is 8 Ω and the amplifier requires a load impedance of 3.2 kΩ, determine the turns ratio of the ideal transformer.

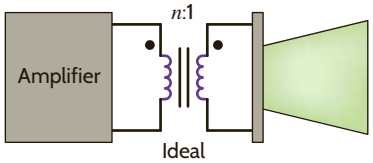

Figure P10.68

10.69 Given that $\mathbf{V}_o = 48\angle 30°$ V in the circuit shown in Fig. P10.69, determine $\mathbf{V}_S$.

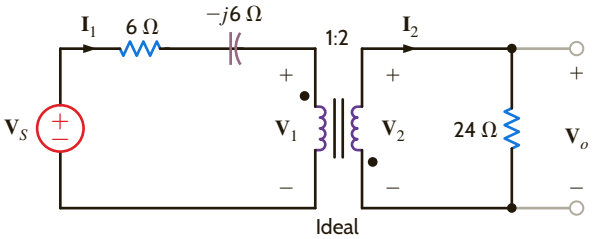

Figure P10.69

10.70 Determine $\mathbf{V}_S$ in the circuit in Fig. P10.70.

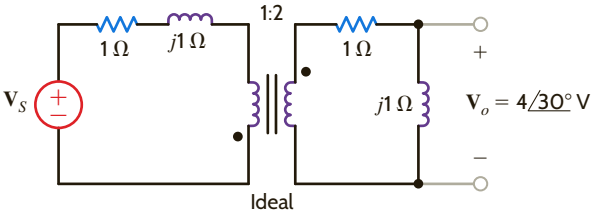

Figure P10.70

10.71 Determine $\mathbf{I}_S$ in the circuit in Fig. P10.71.

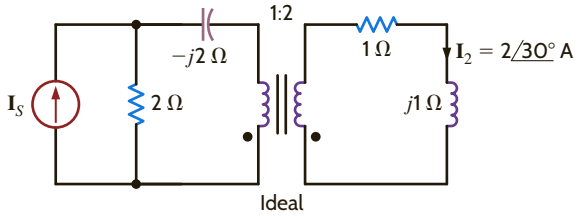

Figure P10.71

10.72 In the network in Fig. P10.72, if $\mathbf{I}_1 = 4\underline{/0^\circ}$ A, find $\mathbf{V}_S$.

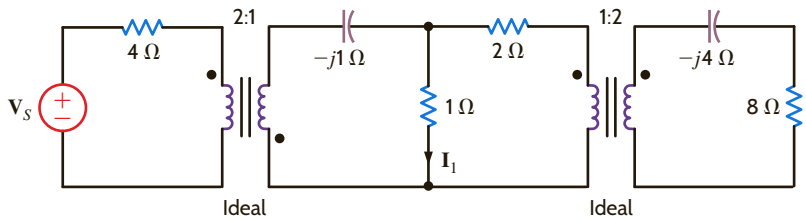

Figure P10.72

10.73 In the circuit in Fig. P10.73, if $\mathbf{I}_x = 4\underline{/30^\circ}$ A, find $\mathbf{V}_o$.

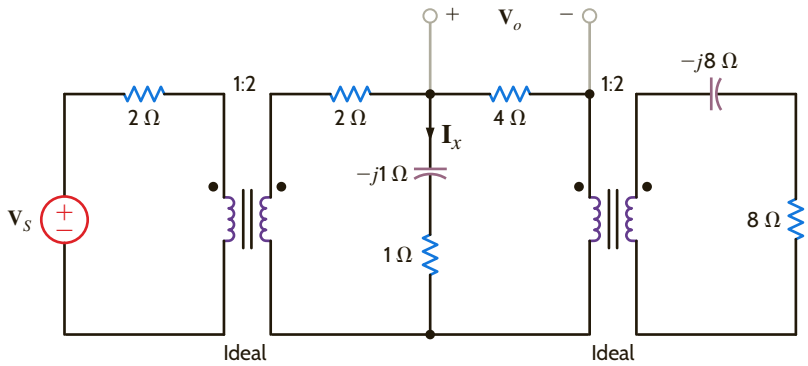

Figure P10.73

10.74 In the network shown in Fig. P10.74, determine the value of the load impedance for maximum power transfer.

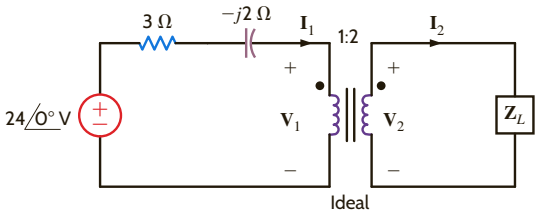

Figure P10.74

10.75 In the network shown in Fig. P10.75, determine the value of the load impedance for maximum power transfer.

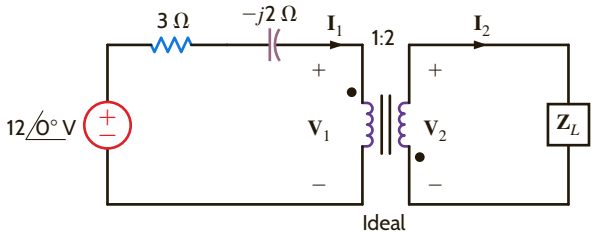

Figure P10.75

10.76 Find $\mathbf{V}_S$ in the network in Fig. P10.76.

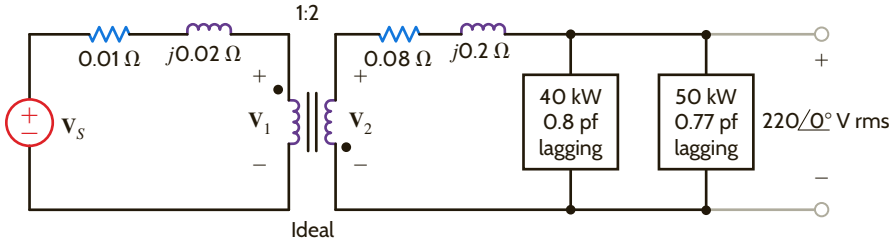

Figure P10.76

10.77 Find $\mathbf{V}_S$ in the network in Fig. P10.77.

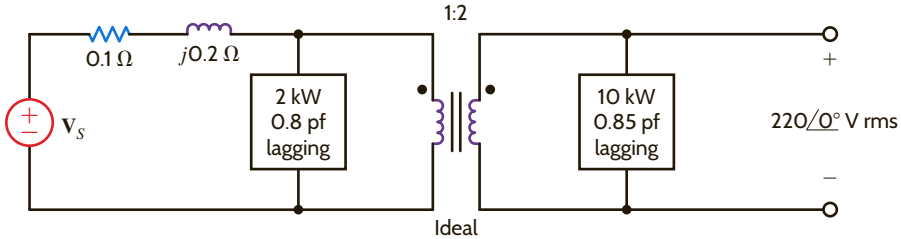

Figure P10.77

TYPICAL PROBLEMS FOUND ON THE FE EXAM

10PFE-1 In the network in Fig. 10PFE-1, find the impedance seen by the source.

a. $4.88\angle 19.75°\ \Omega$ **c.** $5.37\angle -26.57°\ \Omega$

b. $2.56\angle 31.26°\ \Omega$ **d.** $8.23\angle -10.61°\ \Omega$

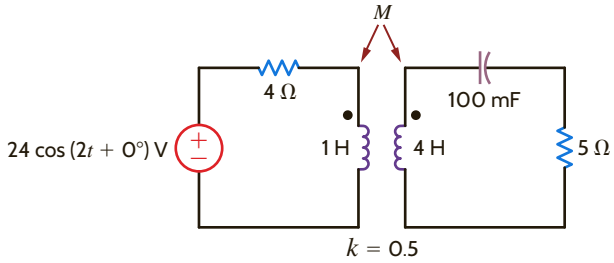

Figure 10PFE-1

10PFE-2 In the circuit in Fig. 10PFE-2, select the value of the transformer's turns ratio $n = \frac{N_2}{N_1}$ to achieve impedance matching for maximum power transfer. Using this value of n, calculate the power absorbed by the 3-Ω resistor.

a. 100.75 W **c.** 55.6 W

b. 37.5 W **d.** 75 W

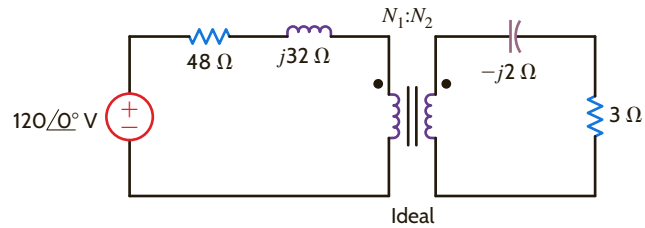

Figure 10PFE-2

10PFE-3 In the circuit in Fig. 10PFE-3, select the turns ratio of the ideal transformer that will match the output of the transistor amplifier to the speaker represented by the 16-Ω load.

a. 18 **c.** 10

b. 30 **d.** 25

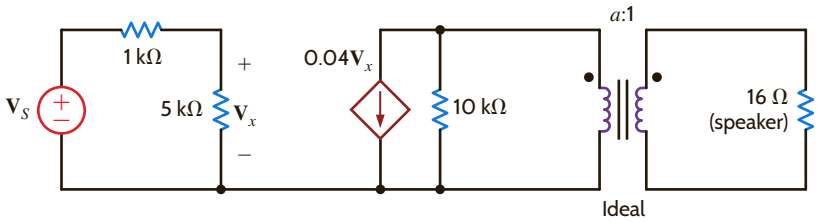

Figure 10PFE-3

10PFE-4 What is the current $\mathbf{I}_2$ in the circuit shown in Fig. 10PFE-4?

a. $11.77\angle 35.25°$ A **c.** $23.54\angle 11.31°$ A

b. $5.85\angle 20.62°$ A **d.** $15.36\angle 8.48°$ A

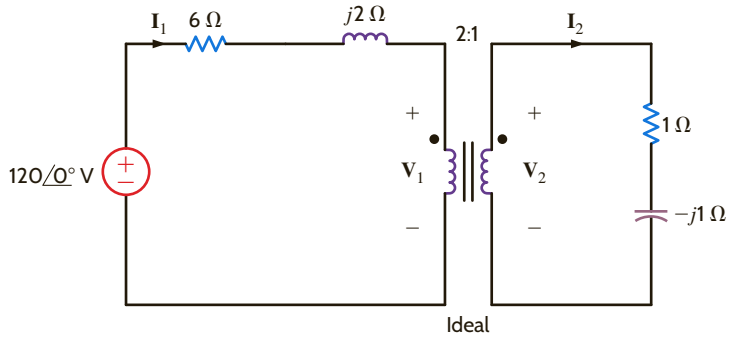

Figure 10PFE-4

10PFE-5 What is the current $\mathbf{I}_2$ in the circuit shown in Fig. 10PFE-5?

a. $16.97\angle -45°$ A

b. $10.54\angle 30°$ A

c. $12.02\angle -15°$ A

d. $8.25\angle 45°$ A

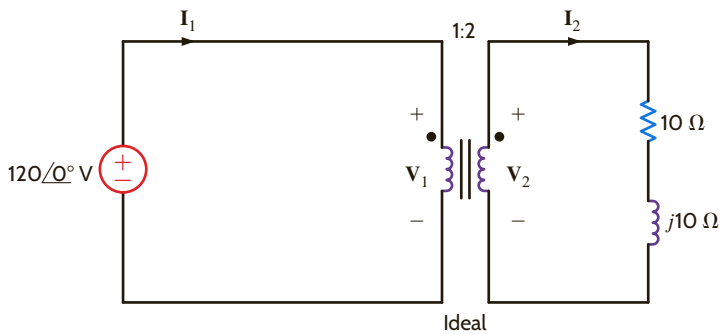

Figure 10PFE-5

Chapter Eleven

THE LEARNING GOALS FOR THIS CHAPTER ARE THAT STUDENTS SHOULD BE ABLE TO:

- Describe the characteristics of a balanced, three-phase circuit.
- Transform the basic wye connection to a delta three-phase connection, and visa versa.
- Analyze a balanced, three-phase circuit to calculate voltages and currents.
- Calculate complex power in balanced, three-phase circuits.

POLYPHASE CIRCUITS

AN EXPERIMENT THAT HELPS STUDENTS ANALYZE THREE-PHASE CIRCUITS IS:

- Three-Phase Loads: Calculate the complex three-phase impedance, power factor, and required power factor correction for a three-phase circuit using PSpice simulations and laboratory measurements.

BY APPLYING THEIR KNOWLEDGE OF THREE-PHASE CIRCUITS, STUDENTS CAN DESIGN:

- A balanced Y-connected three-phase power supply and test its operation.

11.1 Three-Phase Circuits

In this chapter we add a new dimension to our study of ac steady-state circuits. Up to this point, we have dealt with what we refer to as single-phase circuits. Now we extend our analysis techniques to polyphase circuits or, more specifically, three-phase circuits (that is, circuits containing three voltage sources that are one-third of a cycle apart in time).

We study three-phase circuits for a number of important reasons. It is more advantageous and economical to generate and transmit electric power in the polyphase mode than with single-phase systems. As a result, most electric power is transmitted in polyphase circuits. In the United States the power system frequency is 60 Hz, whereas in other parts of the world 50 Hz is common.

The generation of electric power in the polyphase mode is accomplished with an electric generator, which converts mechanical energy to electrical energy. This mechanical energy can be produced at a dam or hydroelectric facility, as shown in **Fig. 11.1**. As illustrated in **Fig. 11.2**, water stored in a reservoir falls through a turbine to the river below. The turbine drives the electric generator to produce three-phase voltages. In the fossil-fuel generating facility in **Fig. 11.3**, the turbine is driven by steam. In the diagram of **Fig. 11.4**, fuel and air are combusted in the boiler, turning water into steam to drive the turbine. Cooling water is circulated through the condenser to change the steam exhaust from the turbine back to water to complete the cycle. A nuclear generating facility, shown in **Fig. 11.5**, also utilizes steam to drive the turbine. The heat from fission in the reactor core produces the steam.

Note that all three types of generating facilities are located close to a body of water such as a river and are not often close to the loads that consume the electrical energy. Power transmission lines, such as those shown in **Fig. 11.6**, are constructed to transport electrical energy from the generating facilities to the loads. The transmission of electrical energy is most efficiently accomplished at very high voltages. Because this voltage can be extremely high in comparison to the level at which it is normally used (e.g., in the household), there is a need to raise and lower the voltage. This can be easily accomplished in ac systems using transformers, which we studied in Chapter 10. An example of a three-phase power transformer is shown in **Fig. 11.7**.

Figure 11.1

Hydroelectric generating facility (Courtesy of Mark Nelms).

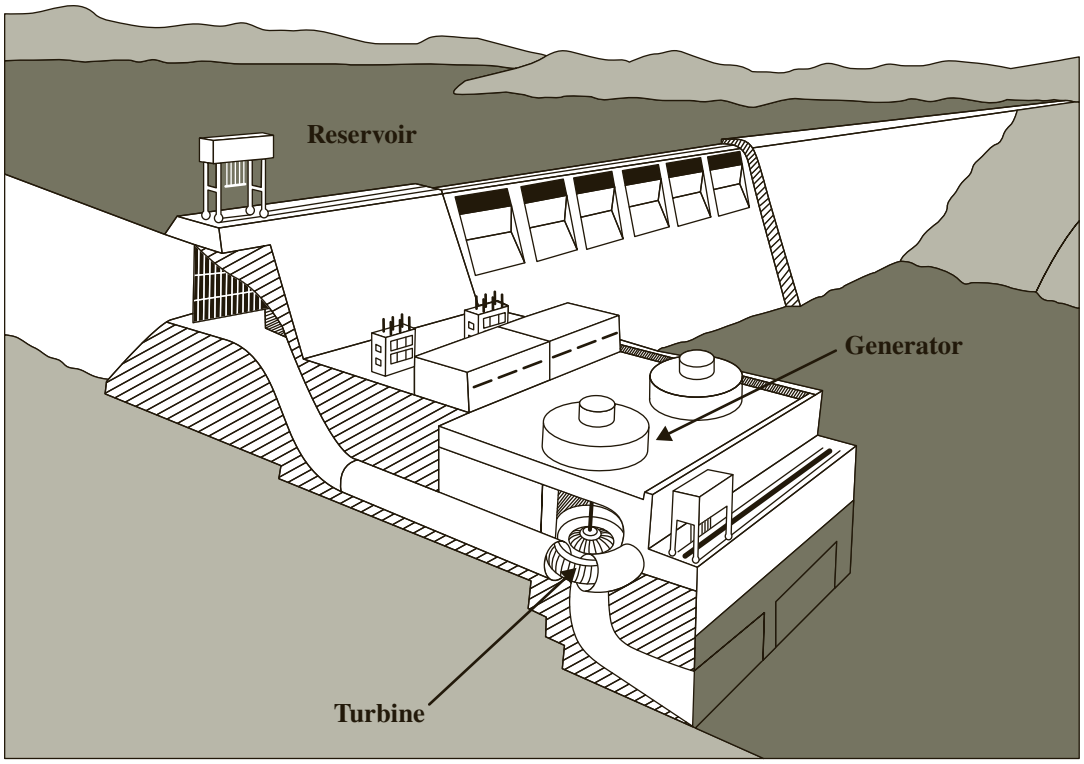

Figure 11.2

Diagram of a hydroelectric generating facility (Diagram courtesy of Southern Company).

Figure 11.3

A fossil-fuel generating facility (Courtesy of Mark Nelms).

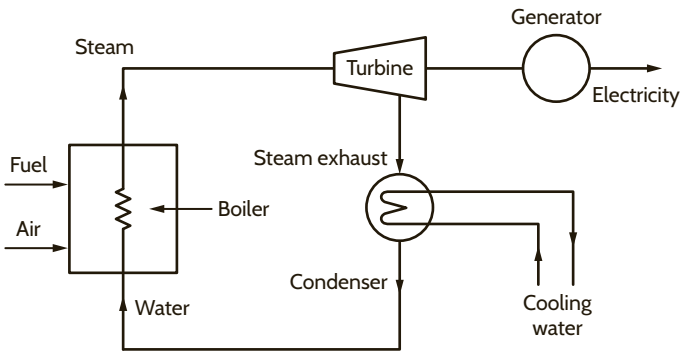

Figure 11.4

Conceptual diagram for a fossil-fuel generating facility (Diagram courtesy of Southern Company).

Figure 11.5

A nuclear generating facility (Stockbyte/SUPERSTOCK).

Figure 11.6

Power transmission lines (Courtesy of Mark Nelms).

Figure 11.7
A three-phase power transformer (Courtesy of Jeremy Nelms, Talquin Electric Cooperative, Inc.).

As the name implies, three-phase circuits are those in which the forcing function is a three-phase system of voltages. If the three sinusoidal voltages have the same magnitude and frequency and each voltage is 120° out of phase with the other two, the voltages are said to be *balanced*. If the loads are such that the currents produced by the voltages are also balanced, the entire circuit is referred to as a *balanced three-phase circuit*.

A balanced set of three-phase voltages can be represented in the frequency domain as shown in **Fig. 11.8a**, where we have assumed that their magnitudes are 120 V rms. From the figure we note that

$$\begin{aligned} \mathbf{V}_{an} &= 120\underline{/0^\circ} \text{ V rms} \\ \mathbf{V}_{bn} &= 120\underline{/-120^\circ} \text{ V rms} \\ \mathbf{V}_{cn} &= 120\underline{/-240^\circ} \text{ V rms} \\ &= 120\underline{/120^\circ} \text{ V rms} \end{aligned} \qquad \textbf{11.1}$$

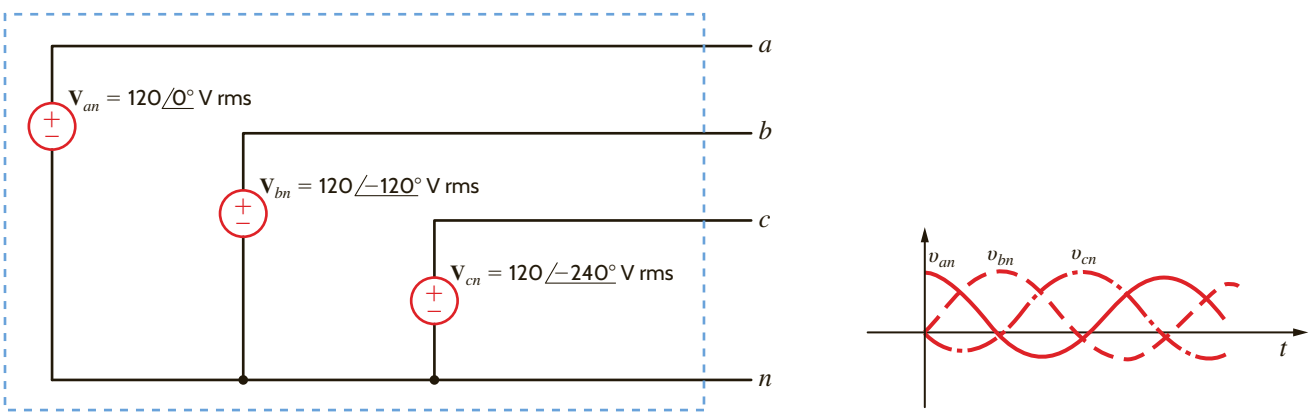

Figure 11.8
Balanced three-phase voltages.

Our double-subscript notation is exactly the same as that employed in the earlier chapters; that is, $\mathbf{V}_{an}$ means the voltage at point *a* with respect to point *n*. We will also employ the double-subscript notation for currents; that is, $\mathbf{I}_{an}$ is used to represent the current from *a* to *n*. However, we must be very careful in this case to describe the precise path, since in a circuit there will be more than one path between the two points. For example, in the case of a single loop the two possible currents in the two paths will be 180° out of phase with each other.

The preceding phasor voltages can be expressed in the time domain as

$$\begin{aligned} v_{an}(t) &= 120\sqrt{2}\cos\omega t \text{ V} \\ v_{bn}(t) &= 120\sqrt{2}\cos(\omega t - 120°) \text{ V} \\ v_{cn}(t) &= 120\sqrt{2}\cos(\omega t - 240°) \text{ V} \end{aligned} \tag{11.2}$$

These time functions are shown in **Fig. 11.8b.**

Finally, let us examine the instantaneous power generated by a three-phase system. Assume that the voltages in Fig. 11.8 are

$$\begin{aligned} v_{an}(t) &= V_m\cos\omega t \text{ V} \\ v_{bn}(t) &= V_m\cos(\omega t - 120°) \text{ V} \\ v_{cn}(t) &= V_m\cos(\omega t - 240°) \text{ V} \end{aligned} \tag{11.3}$$

If the load is balanced, the currents produced by the sources are

$$\begin{aligned} i_a(t) &= I_m\cos(\omega t - \theta) \text{ A} \\ i_b(t) &= I_m\cos(\omega t - \theta - 120°) \text{ A} \\ i_c(t) &= I_m\cos(\omega t - \theta - 240°) \text{ A} \end{aligned} \tag{11.4}$$

The instantaneous power produced by the system is

$$\begin{aligned} p(t) &= p_a(t) + p_b(t) + p_c(t) \\ &= V_m I_m[\cos\omega t\cos(\omega t - \theta) + \cos(\omega t - 120°)\cos(\omega t - \theta - 120°) \\ &\quad + \cos(\omega t - 240°)\cos(\omega t - \theta - 240°)] \end{aligned} \tag{11.5}$$

Using the trigonometric identity,

$$\cos\alpha\cos\beta = \frac{1}{2}[\cos(\alpha - \beta) + \cos(\alpha + \beta)] \tag{11.6}$$

Eq. (11.5) becomes

$$\begin{aligned} p(t) = \frac{V_m I_m}{2}&[\cos\theta + \cos(2\omega t - \theta) + \cos\theta \\ &+ \cos(2\omega t - \theta - 240°) + \cos\theta + \cos(2\omega t - \theta - 480°)] \end{aligned} \tag{11.7}$$

which can be written as

$$\begin{aligned} p(t) = \frac{V_m I_m}{2}&[3\cos\theta + \cos(2\omega t - \theta) \\ &+ \cos(2\omega t - \theta - 120°) + \cos(2\omega t - \theta + 120°)] \end{aligned} \tag{11.8}$$

There exists a trigonometric identity that allows us to simplify the preceding expression. The identity, which we will prove later using phasors, is

$$\cos\phi + \cos(\phi - 120°) + \cos(\phi + 120°) = 0 \tag{11.9}$$

If we employ this identity, the expression for the power becomes

$$p(t) = 3\frac{V_m I_m}{2}\cos\theta \text{ W} \tag{11.10}$$

Note that this equation indicates that the instantaneous power is always constant in time rather than pulsating, as in the single-phase case. Therefore, power delivery from a three-phase voltage source is very smooth, which is another important reason power is generated in three-phase form.

11.2 Three-Phase Connections

By far the most important polyphase voltage source is the balanced three-phase source. This source, as illustrated by **Fig. 11.9**, has the following properties. The phase voltages—that is, the voltage from each line a, b, and c to the neutral n—are given by

$$\begin{aligned} \mathbf{V}_{an} &= V_p\underline{/0^\circ} \\ \mathbf{V}_{bn} &= V_p\underline{/-120^\circ} \\ \mathbf{V}_{cn} &= V_p\underline{/+120^\circ} \end{aligned} \qquad \textbf{11.11}$$

The phasor diagram for these voltages is shown in **Fig. 11.10**. The phase sequence of this set is said to be *abc* (called positive phase sequence), meaning that $\mathbf{V}_{bn}$ *lags* $\mathbf{V}_{an}$ by 120°.

We will standardize our notation so that we always label the voltages $\mathbf{V}_{an}$, $\mathbf{V}_{bn}$, and $\mathbf{V}_{cn}$ and observe them in the order *abc*. Furthermore, we will normally assume with no loss of generality that $\underline{/\mathbf{V}_{an}} = 0^\circ$.

An important property of the balanced voltage set is that

$$\mathbf{V}_{an} + \mathbf{V}_{bn} + \mathbf{V}_{cn} = 0 \qquad \textbf{11.12}$$

This property can easily be seen by resolving the voltage phasors into components along the real and imaginary axes. It can also be demonstrated via Eq. (11.9).

From the standpoint of the user who connects a load to the balanced three-phase voltage source, it is not important how the voltages are generated. It is important to note, however, that if the load currents generated by connecting a load to the power source shown in Fig. 11.9 are also *balanced*, there are two possible equivalent configurations for the load. The equivalent load can be considered as being connected in either a *wye* (Y) or a *delta* (Δ) configuration. The balanced wye configuration is shown in **Fig. 11.11a** and equivalently in **Fig. 11.11b**. The delta configuration is shown in **Fig. 11.12a** and equivalently in **Fig. 11.12b**. Note that in the case of the delta connection, there is no neutral line. The actual function of the neutral line in the wye connection will be examined, and it will be shown that in a balanced system the neutral line carries no current and, for purposes of analysis, may be omitted.

The wye and delta connections each have their advantages. In the wye case, we have access to two voltages, the line-to-line and line-to-neutral, and it provides a convenient place to connect to ground for system protection. That is, it limits the magnitude of surge voltages. In the delta case, this configuration stays in balance better when serving unbalanced loads, and it is capable of trapping the third harmonic.

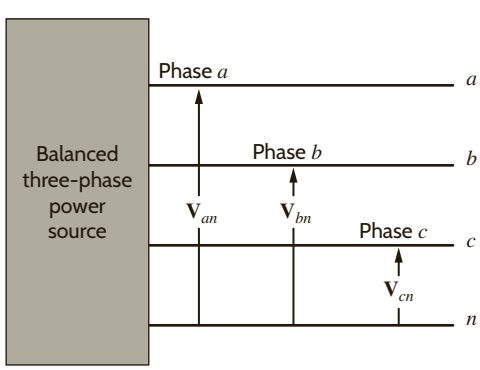

Figure 11.9
Balanced three-phase voltage source.

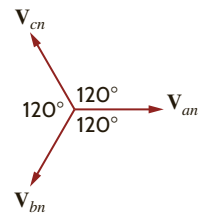

Figure 11.10
Phasor diagram for a balanced three-phase voltage source.

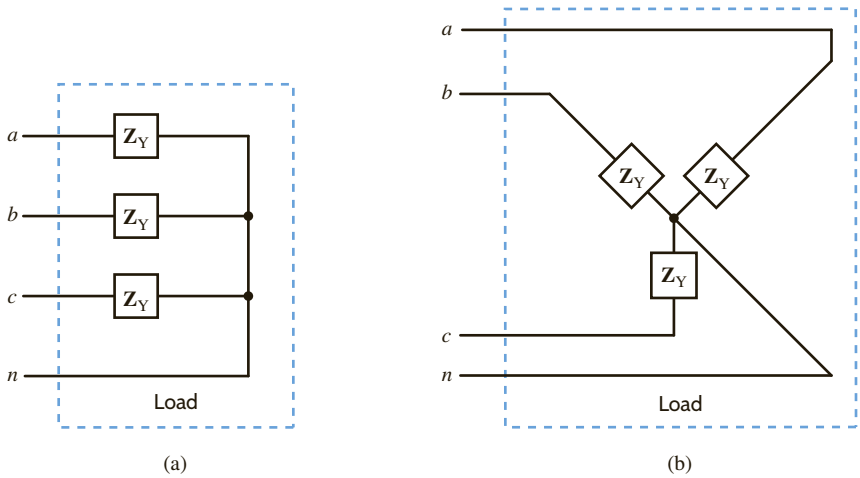

Figure 11.11
Wye (Y)-connected loads.

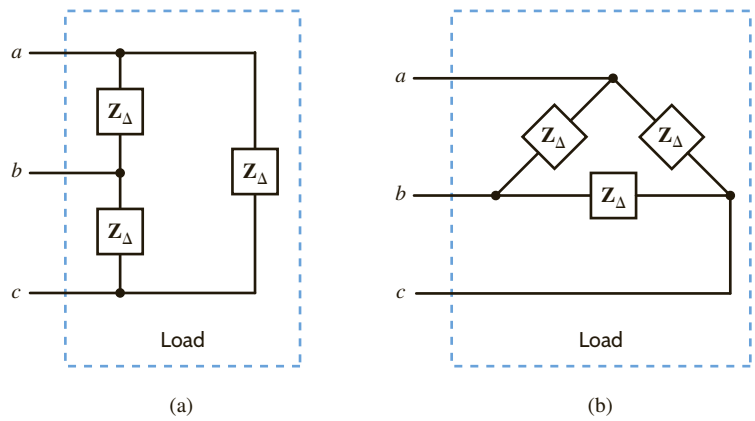

Figure 11.12
Delta (Δ)-connected loads.

11.3 Source/Load Connections

Since the source and the load can each be connected in either Y or Δ, three-phase balanced circuits can be connected Y–Y, Y–Δ, Δ–Y, or Δ–Δ. Our approach to the analysis of all of these circuits will be "Think Y"; therefore, we will analyze the Y–Y connection first.

BALANCED WYE–WYE CONNECTION Suppose now that both the source and load are connected in a wye, as shown in **Fig. 11.13**. The phase voltages with positive phase sequence are

$$\begin{aligned} \mathbf{V}_{an} &= V_p\underline{/0^\circ} \\ \mathbf{V}_{bn} &= V_p\underline{/-120^\circ} \\ \mathbf{V}_{cn} &= V_p\underline{/+120^\circ} \end{aligned} \qquad \textbf{11.13}$$

where V_p, the phase voltage, is the magnitude of the phasor voltage from the neutral to any line. The *line-to-line* voltages or, simply, *line voltages* can be calculated using KVL; for example,

$$\begin{aligned} \mathbf{V}_{ab} &= \mathbf{V}_{an} - \mathbf{V}_{bn} \\ &= V_p\underline{/0^\circ} - V_p\underline{/-120^\circ} \\ &= V_p - V_p\left[-\frac{1}{2} - j\frac{\sqrt{3}}{2}\right] \\ &= V_p\left[\frac{3}{2} + j\frac{\sqrt{3}}{2}\right] \\ &= \sqrt{3}\,V_p\underline{/30^\circ} \end{aligned}$$

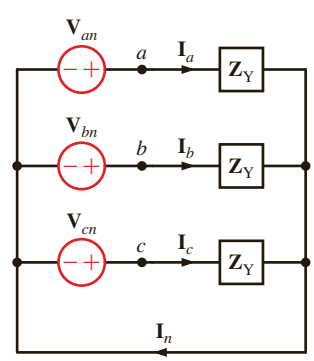

Figure 11.13
Balanced three-phase wye–wye connection.

Figure 11.14

Phasor representation of phase and line voltages in a balanced wye–wye system.

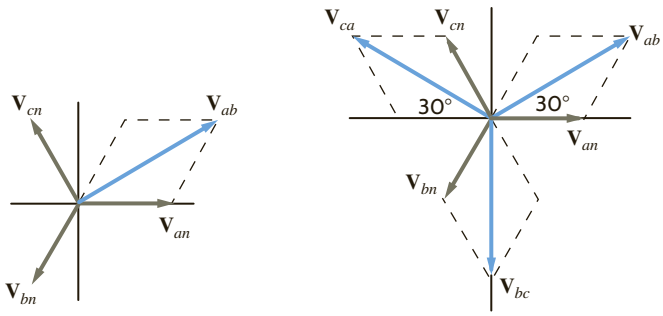

The phasor addition is shown in **Fig. 11.14a**. In a similar manner, we obtain the set of line-to-line voltages as

$$\begin{aligned} \mathbf{V}_{ab} &= \sqrt{3}\, V_p \underline{/30^\circ} \\ \mathbf{V}_{bc} &= \sqrt{3}\, V_p \underline{/-90^\circ} \\ \mathbf{V}_{ca} &= \sqrt{3}\, V_p \underline{/-210^\circ} \end{aligned} \qquad \textbf{11.14}$$

HINT

Conversion rules:

$\underline{/\mathbf{V}_{ab}} = \underline{/\mathbf{V}_{an}} + 30^\circ$

$V_{ab} = \sqrt{3}\, V_{an}$

All the line voltages together with the phase voltages are shown in **Fig. 11.14b**. We will denote the magnitude of the line voltages as V_L, and therefore, for a balanced system,

$$V_L = \sqrt{3}\, V_p \qquad \textbf{11.15}$$

Hence, in a wye-connected system, the line voltage is equal to $\sqrt{3}$ times the phase voltage.

As shown in Fig. 11.13, the line current for the a phase is

$$\mathbf{I}_a = \frac{\mathbf{V}_{an}}{\mathbf{Z}_Y} = \frac{V_p \underline{/0^\circ}}{\mathbf{Z}_Y} \qquad \textbf{11.16}$$

where $\mathbf{I}_b$ and $\mathbf{I}_c$ have the same magnitude but lag $\mathbf{I}_a$ by 120° and 240°, respectively.

The neutral current $\mathbf{I}_n$ is then

$$\mathbf{I}_n = (\mathbf{I}_a + \mathbf{I}_b + \mathbf{I}_c) = 0 \qquad \textbf{11.17}$$

Since there is no current in the neutral, this conductor could contain any impedance or it could be an open or a short circuit, without changing the results found previously.

As illustrated by the wye–wye connection in Fig. 11.13, the current in the line connecting the source to the load is the same as the phase current flowing through the impedance $\mathbf{Z}_Y$. Therefore, in a *wye–wye connection*,

$$I_L = I_Y \qquad \textbf{11.18}$$

where I_L is the magnitude of the line current and I_Y is the magnitude of the current in a wye-connected load.

Although we have a three-phase system composed of three sources and three loads, we can analyze a single phase and use the phase sequence to obtain the voltages and currents in the other phases. This is, of course, a direct result of the balanced condition. We may even have impedances present in the lines; however, as long as the system remains balanced, we need analyze only one phase. If the line impedances in lines a, b, and c are equal, the system will be balanced. Recall that the balance of the system is unaffected by whatever appears in the neutral line, and since the neutral line impedance is arbitrary, we assume that it is zero (i.e., a short circuit).

EXAMPLE 11.1

An *abc*-sequence three-phase voltage source connected in a balanced wye has a line voltage of $\mathbf{V}_{ab} = 208\underline{/-30^\circ}$ V rms. We wish to determine the phase voltages.

SOLUTION

The magnitude of the phase voltage is given by the expression

$$V_p = \frac{208}{\sqrt{3}}$$
$$= 120 \text{ V rms}$$

The phase relationships between the line and phase voltages are shown in Fig. 11.14. From this figure we note that

$$\mathbf{V}_{an} = 120\underline{/-60^\circ} \text{ V rms}$$
$$\mathbf{V}_{bn} = 120\underline{/-180^\circ} \text{ V rms}$$
$$\mathbf{V}_{cn} = 120\underline{/+60^\circ} \text{ V rms}$$

The magnitudes of these voltages are quite common, and one often hears that the electric service in a building, for example, is three-phase 208/120 V rms.

HINT

The phase of

$\mathbf{V}_{an} = \underline{/\mathbf{V}_{an}} = \underline{/\mathbf{V}_{ab}} - 30^\circ$

EXAMPLE 11.2

A three-phase wye-connected load is supplied by an *abc*-sequence balanced three-phase wye-connected source with a phase voltage of 120 V rms. If the line impedance and load impedance per phase are $1 + j1\ \Omega$ and $20 + j10\ \Omega$, respectively, we wish to determine the value of the line currents and the load voltages.

SOLUTION

The phase voltages are

$$\mathbf{V}_{an} = 120\underline{/0^\circ} \text{ V rms}$$
$$\mathbf{V}_{bn} = 120\underline{/-120^\circ} \text{ V rms}$$
$$\mathbf{V}_{cn} = 120\underline{/+120^\circ} \text{ V rms}$$

The per-phase circuit diagram is shown in **Fig. 11.15**. The line current for the *a* phase is

$$\mathbf{I}_{aA} = \frac{120\underline{/0^\circ}}{21 + j11}$$
$$= 5.06\underline{/-27.65^\circ} \text{ A rms}$$

The load voltage for the *a* phase, which we call $\mathbf{V}_{AN}$, is

$$\mathbf{V}_{AN} = (5.06\underline{/-27.65^\circ})(20 + j10)$$
$$= 113.15\underline{/-1.08^\circ} \text{ V rms}$$

HINT

$\underline{/\mathbf{I}_{bB}} = \underline{/\mathbf{I}_{aA}} - 120^\circ$

$\underline{/\mathbf{I}_{cC}} = \underline{/\mathbf{I}_{aA}} + 120^\circ$

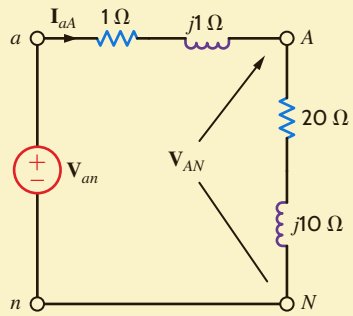

Figure 11.15
Per-phase circuit diagram for the problem in Example 11.2.

The corresponding line currents and load voltages for the b and c phases are

$$\mathbf{I}_{bB} = 5.06\underline{/-147.65^\circ} \text{ A rms} \qquad \mathbf{V}_{BN} = 113.15\underline{/-121.08^\circ} \text{ V rms}$$

$$\mathbf{I}_{cC} = 5.06\underline{/-267.65^\circ} \text{ A rms} \qquad \mathbf{V}_{CN} = 113.15\underline{/-241.08^\circ} \text{ V rms}$$

To reemphasize and clarify our terminology, phase voltage, V_p, is the magnitude of the phasor voltage from the neutral to any line, while line voltage, V_L, is the magnitude of the phasor voltage between any two lines. Thus, the values of V_L and V_p will depend on the point at which they are calculated in the system.

LEARNING ASSESSMENTS

E11.1 The voltage for the a phase of an abc-phase-sequence balanced wye-connected source is $\mathbf{V}_{an} = 120\underline{/90^\circ}$ V rms. Determine the line voltages for this source.

ANSWER:
$\mathbf{V}_{ab} = 208\underline{/120^\circ}$ V rms;
$\mathbf{V}_{bc} = 208\underline{/0^\circ}$ V rms;
$\mathbf{V}_{ca} = 208\underline{/-120^\circ}$ V rms.

E11.2 An abc-phase-sequence three-phase voltage source connected in a balanced wye has a line voltage of $\mathbf{V}_{ab} = 208\underline{/0^\circ}$ V rms. Determine the phase voltages of the source.

ANSWER:
$\mathbf{V}_{an} = 120\underline{/-30^\circ}$ V rms;
$\mathbf{V}_{bn} = 120\underline{/-150^\circ}$ V rms;
$\mathbf{V}_{cn} = 120\underline{/-270^\circ}$ V rms.

E11.3 A three-phase wye-connected load is supplied by an abc-sequence balanced three-phase wye-connected source through a transmission line with an impedance of $1 + j1\ \Omega$ per phase. The load impedance is $8 + j3\ \Omega$ per phase. If the load voltage for the a phase is $104.02\underline{/26.6^\circ}$ V rms (i.e., $V_p = 104.02$ V rms at the load end), determine the phase voltages of the source.

ANSWER:
$\mathbf{V}_{an} = 120\underline{/30^\circ}$ V rms;
$\mathbf{V}_{bn} = 120\underline{/-90^\circ}$ V rms;
$\mathbf{V}_{cn} = 120\underline{/-210^\circ}$ V rms.

E11.4 A positive-sequence balanced three-phase wye-connected source with a phase voltage of 277 V rms supplies power to a balanced wye-connected load. The per-phase load impedance is $60 - j40\ \Omega$. Determine the line currents in the circuit if the phase angle of $\mathbf{V}_{an} = 0^\circ$.

ANSWER:
$\mathbf{I}_{aA} = 3.84\underline{/33.69^\circ}$ A rms;
$\mathbf{I}_{bB} = 3.84\underline{/-86.31^\circ}$ A rms;
$\mathbf{I}_{cC} = 3.84\underline{/153.69^\circ}$ A rms.

E11.5 An abc-sequence set of voltages feeds a balanced three-phase wye–wye system. The line and load impedances are $0.5 + j0.75\ \Omega$ and $20 - j24\ \Omega$, respectively. If the load voltage of the a phase is $\mathbf{V}_{AN} = 125\underline{/10^\circ}$ V rms, find the line voltages of the input.

ANSWER:
$\mathbf{V}_{ab} = 214.8\underline{/41.6^\circ}$ V rms;
$\mathbf{V}_{bc} = 214.8\underline{/-78.4^\circ}$ V rms;
$\mathbf{V}_{ca} = 214.8\underline{/161.6^\circ}$ V rms.

E11.6 In a balanced three-phase wye–wye system, the total power in the lines is 650 W. $\mathbf{V}_{AN} = 117\underline{/15^\circ}$ V rms and the power factor of the load is 0.88 leading. If the line impedance is $1 + j2\ \Omega$, determine the load impedance.

ANSWER:
$\mathbf{Z}_L = 7 - j3.78\ \Omega$.

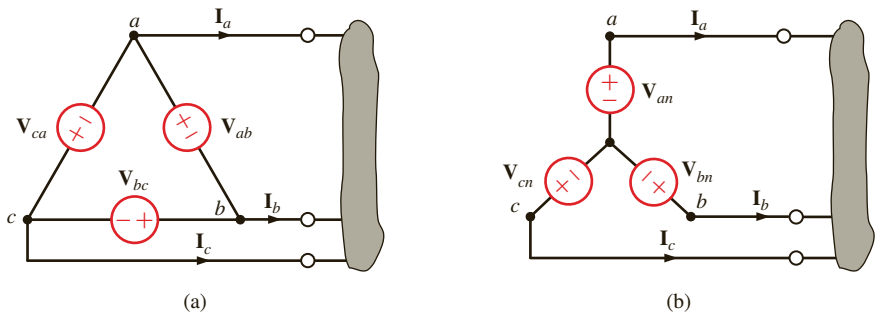

Figure 11.16

Sources connected in delta and wye.

The previous analysis indicates that we can simply treat a three-phase balanced circuit on a per-phase basis and use the phase relationship to determine all voltages and currents. Let us now examine the situations in which either the source or the load is connected in Δ.

DELTA-CONNECTED SOURCE Consider the delta-connected source shown in **Fig. 11.16a**. Note that the sources are connected line to line. We found earlier that the relationship between line-to-line and line-to-neutral voltages was given by Eq. (11.14) and illustrated in Fig. 11.14 for an *abc*-phase sequence of voltages. Therefore, if the delta sources are

$$\begin{aligned} \mathbf{V}_{ab} &= V_L \underline{/0^\circ} \\ \mathbf{V}_{bc} &= V_L \underline{/-120^\circ} \\ \mathbf{V}_{ca} &= V_L \underline{/+120^\circ} \end{aligned} \qquad \textbf{11.19}$$

where V_L is the magnitude of the phase voltage. The equivalent wye sources shown in **Fig. 11.16b** are

$$\begin{aligned} \mathbf{V}_{an} &= \frac{V_L}{\sqrt{3}} \underline{/-30^\circ} = V_p \underline{/-30^\circ} \\ \mathbf{V}_{bn} &= \frac{V_L}{\sqrt{3}} \underline{/-150^\circ} = V_p \underline{/-150^\circ} \\ \mathbf{V}_{cn} &= \frac{V_L}{\sqrt{3}} \underline{/-270^\circ} = V_p \underline{/+90^\circ} \end{aligned} \qquad \textbf{11.20}$$

where V_p is the magnitude of the phase voltage of an equivalent wye-connected source. Therefore, if we encounter a network containing a delta-connected source, we can easily convert the source from delta to wye so that all the techniques we have discussed previously can be applied in an analysis.

PROBLEM-SOLVING STRATEGY

THREE-PHASE BALANCED AC POWER CIRCUITS

STEP 1. Convert the source/load connection to a wye–wye connection if either the source, load, or both are connected in delta since the wye–wye connection can be easily used to obtain the unknown phasors.

STEP 2. Only the unknown phasors for the *a* phase of the circuit need be determined since the three-phase system is balanced.

STEP 3. Finally, convert the now-known phasors to the corresponding phasors in the original system.

EXAMPLE 11.3

Consider the network shown in Fig. 11.17a. We wish to determine the line currents and the magnitude of the line voltage at the load.

SOLUTION

The single-phase diagram for the network is shown in Fig. 11.17b. The line current $\mathbf{I}_{aA}$ is

$$\mathbf{I}_{aA} = \frac{(208/\sqrt{3})\underline{/-30^\circ}}{12.1 + j4.2}$$
$$= 9.38\underline{/-49.14^\circ} \text{ A rms}$$

and thus $\mathbf{I}_{bB} = 9.38\underline{/-169.14^\circ}$ V rms and $\mathbf{I}_{cC} = 9.38\underline{/70.86^\circ}$ V rms. The voltage $\mathbf{V}_{AN}$ is then

$$\mathbf{V}_{AN} = (9.38\underline{/-49.14^\circ})(12 + j4)$$
$$= 118.65\underline{/-30.71^\circ} \text{ V rms}$$

Therefore, the magnitude of the line voltage at the load is

$$V_L = \sqrt{3}(118.65)$$
$$= 205.51 \text{ V rms}$$

The phase voltage at the source is $V_p = 208/\sqrt{3} = 120$ V rms, while the phase voltage at the load is $V_p = 205.51/\sqrt{3} = 118.65$ V rms. Clearly, we must be careful with our notation and specify where the phase or line voltage is taken.

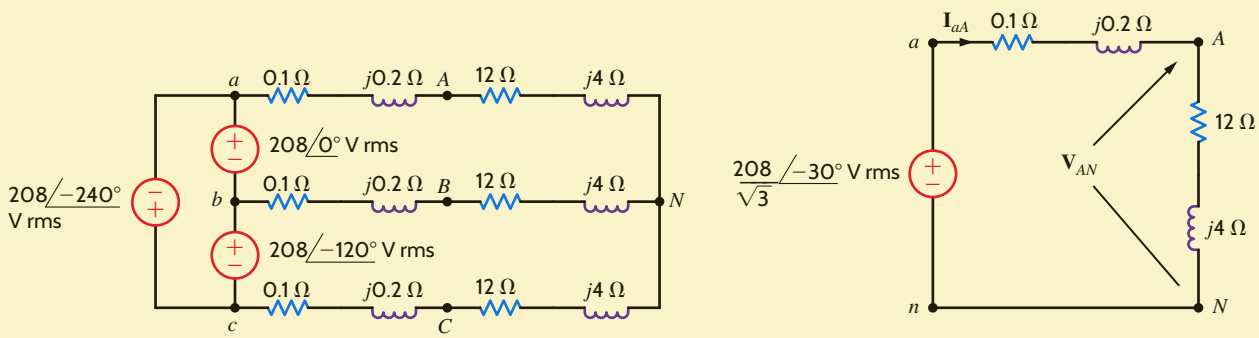

Figure 11.17
Delta–wye network and an equivalent single-phase (*a*-phase) diagram.

LEARNING ASSESSMENTS

E11.7 Consider the network shown in Fig. E11.7. Compute the magnitude of the line voltages at the load.

ANSWER:
$V_L = 205.2$ V rms.

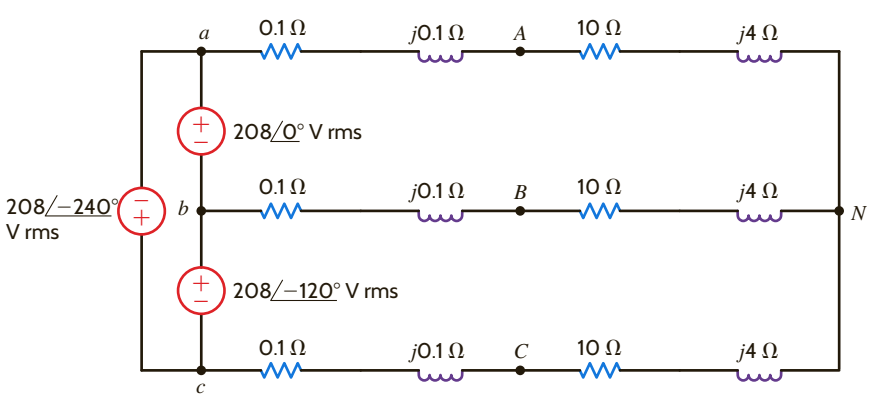

Figure E11.7

E11.8 Find the magnitude of the line voltage at the load in Fig. E11.8.

ANSWER:
$V_L = 209.2$ V rms.

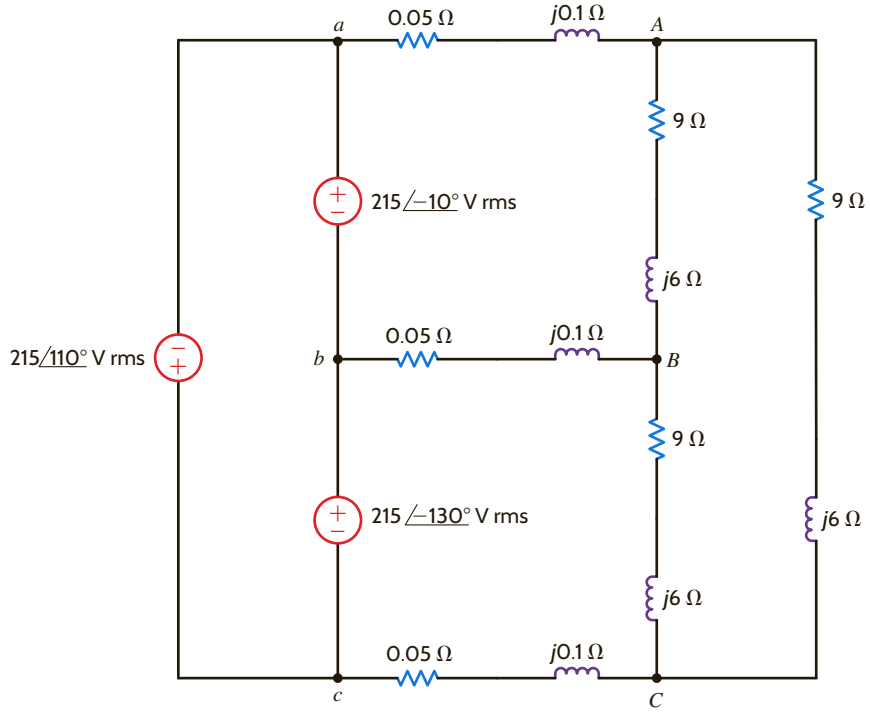

Figure E11.8

DELTA-CONNECTED LOAD Consider now the Δ-connected load shown in **Fig. 11.18**. Note that in this connection the line-to-line voltage is the voltage across each load impedance.

If the phase voltages of the source are

$$\begin{aligned} \mathbf{V}_{an} &= V_p\underline{/0^\circ} \\ \mathbf{V}_{bn} &= V_p\underline{/-120^\circ} \\ \mathbf{V}_{cn} &= V_p\underline{/+120^\circ} \end{aligned} \qquad \textbf{11.21}$$

then the line voltages are

$$\begin{aligned} \mathbf{V}_{ab} &= \sqrt{3}\, V_p\underline{/30^\circ} = V_L\underline{/30^\circ} = \mathbf{V}_{AB} \\ \mathbf{V}_{bc} &= \sqrt{3}\, V_p\underline{/-90^\circ} = V_L\underline{/-90^\circ} = \mathbf{V}_{BC} \\ \mathbf{V}_{ca} &= \sqrt{3}\, V_p\underline{/-210^\circ} = V_L\underline{/-210^\circ} = \mathbf{V}_{CA} \end{aligned} \qquad \textbf{11.22}$$

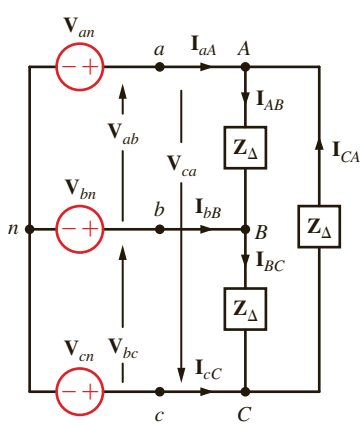

Figure 11.18
Balanced three-phase wye–delta system.

where V_L is the magnitude of the line voltage at both the delta-connected load and at the source since there is no line impedance present in the network.

From Fig. 11.18 we note that if $\mathbf{Z}_\Delta = Z_\Delta \underline{/\theta}$, the phase currents at the load are

$$\mathbf{I}_{AB} = \frac{\mathbf{V}_{AB}}{\mathbf{Z}_\Delta} \qquad \textbf{11.23}$$

where $\mathbf{I}_{BC}$ and $\mathbf{I}_{CA}$ have the same magnitude but lag $\mathbf{I}_{AB}$ by 120° and 240°, respectively. KCL can now be employed in conjunction with the phase currents to determine the line currents. For example,

$$\begin{aligned}\mathbf{I}_{aA} &= \mathbf{I}_{AB} + \mathbf{I}_{AC}\\ &= \mathbf{I}_{AB} - \mathbf{I}_{CA}\end{aligned}$$

However, it is perhaps easier to simply convert the balanced Δ-connected load to a balanced Y-connected load using the Δ–Y transformation. This conversion is possible since the wye–delta and delta–wye transformations outlined in Chapter 2 are also valid for impedance in the frequency domain. In the balanced case, the transformation equations reduce to

$$\mathbf{Z}_Y = \frac{1}{3}\mathbf{Z}_\Delta$$

and then the line current $\mathbf{I}_{aA}$ is simply

$$\mathbf{I}_{aA} = \frac{\mathbf{V}_{an}}{\mathbf{Z}_Y}$$

Finally, using the same approach as that employed earlier to determine the relationship between the line voltages and phase voltages in a Y–Y connection, we can show that the relationship between the *magnitudes* of the phase currents in the Δ-connected load and the line currents is

$$I_L = \sqrt{3}\, I_\Delta \qquad \textbf{11.24}$$

EXAMPLE 11.4

A balanced delta-connected load contains a 10-Ω resistor in series with a 20-mH inductor in each phase. The voltage source is an *abc*-sequence three-phase 60-Hz, balanced wye with a voltage $\mathbf{V}_{an} = 120\underline{/30°}$ V rms. We wish to determine all Δ currents and line currents.

SOLUTION

The impedance per phase in the delta load is $\mathbf{Z}_\Delta = 10 + j7.54\ \Omega$. The line voltage $\mathbf{V}_{ab} = 120\sqrt{3}\underline{/60°}$ V rms. Since there is no line impedance, $\mathbf{V}_{AB} = \mathbf{V}_{ab} = 120\sqrt{3}\underline{/60°}$ V rms. Hence,

$$\begin{aligned}\mathbf{I}_{AB} &= \frac{120\sqrt{3}\underline{/60°}}{10 + j7.54}\\ &= 16.60\underline{/+22.98°}\ \text{A rms}\end{aligned}$$

If $\mathbf{Z}_\Delta = 10 + j7.54\ \Omega$, then

$$\begin{aligned}\mathbf{Z}_Y &= \frac{1}{3}\mathbf{Z}_\Delta\\ &= 3.33 + j2.51\ \Omega\end{aligned}$$

Then the line current

$$\begin{aligned}\mathbf{I}_{aA} &= \frac{\mathbf{V}_{an}}{\mathbf{Z}_Y} = \frac{120\underline{/30°}}{3.33 + j2.51}\\ &= \frac{120\underline{/30°}}{4.17\underline{/37.01°}}\\ &= 28.78\underline{/-7.01°}\ \text{A rms}\end{aligned}$$

Therefore, the remaining phase and line currents are

$$\mathbf{I}_{BC} = 16.60\underline{/-97.02^\circ} \text{ A rms} \qquad \mathbf{I}_{bB} = 28.78\underline{/-127.01^\circ} \text{ A rms}$$
$$\mathbf{I}_{CA} = 16.60\underline{/+142.98^\circ} \text{ A rms} \qquad \mathbf{I}_{cC} = 28.78\underline{/+112.99^\circ} \text{ A rms}$$

In summary, the relationships between the line voltage and phase voltage and the line current and phase current for both the Y and Δ configurations are shown in **Fig. 11.19**. The currents and voltages are shown for one phase. The two remaining phases have the same magnitude but lag by 120° and 240°, respectively.

Careful observation of Table 11.1 indicates that the following rules apply when solving problems in balanced three-phase systems:

- The phase of the voltages and currents in a Δ connection is 30° ahead of those in a Y connection.
- The magnitude of the line voltage or, equivalently, the Δ-connection phase voltage, is $\sqrt{3}$ times that of the Y-connection phase voltage.
- The magnitude of the line current or, equivalently, the Y-connection phase current, is $\sqrt{3}$ times that of the Δ-connection phase current.
- The load impedance in the Y connection is one-third of that in the Δ-connection, and the phase is identical.

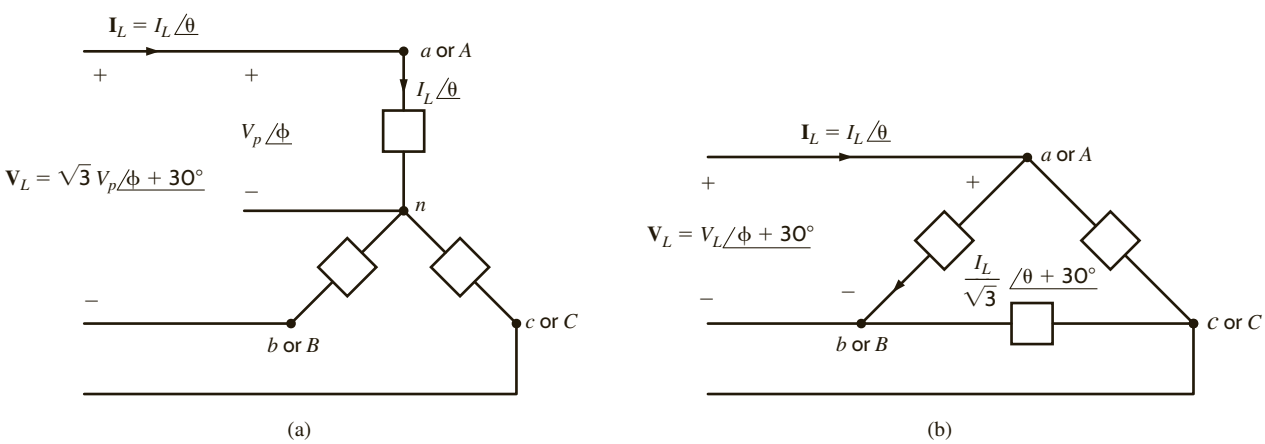

Figure 11.19

Voltage and current relationships for Y and Δ configurations.

TABLE 11.1 The voltage, current, and impedance relationships for Y and Δ configurations

	Y	Δ
Line voltage	$\sqrt{3}\, V_p\underline{/\phi + 30^\circ}$	$V_L\underline{/\phi + 30^\circ}$
($\mathbf{V}_{ab}$ or $\mathbf{V}_{AB}$)	$= V_L\underline{/\phi + 30^\circ}$	
Line current $\mathbf{I}_{aA}$	$I_L\underline{/\theta}$	$I_L\underline{/\theta}$
Phase voltage	$V_p\underline{/\phi}$ ($\mathbf{V}_{an}$ or $\mathbf{V}_{AN}$)	$\sqrt{3}\, V_p\underline{/\phi + 30^\circ}$
Phase current	$I_L\underline{/\theta}$	$\frac{I_L}{\sqrt{3}}\underline{/\theta + 30^\circ}$
Load impedance	$Z_Y\underline{/\phi - \theta}$	$3Z_Y\underline{/\phi - \theta}$

LEARNING ASSESSMENTS

E11.9 An *abc*-sequence three-phase voltage source connected in a balanced wye supplies power to a balanced delta-connected load. The line current for the *a* phase is $\mathbf{I}_{aA} = 12\underline{/40^\circ}$ A rms. Find the phase currents in the delta-connected load.

ANSWER:
$\mathbf{I}_{AB} = 6.93\underline{/70^\circ}$ A rms;
$\mathbf{I}_{BC} = 6.93\underline{/-50^\circ}$ A rms;
$\mathbf{I}_{CA} = 6.93\underline{/-170^\circ}$ A rms.

E11.10 Find the line currents and the power absorbed by the delta-connected load in Fig. E11.10.

ANSWER:
$\mathbf{I}_{aA} = 35.76\underline{/-34.74^\circ}$ A rms;
$\mathbf{I}_{bB} = 35.76\underline{/-154.74^\circ}$ A rms;
$\mathbf{I}_{cC} = 35.76\underline{/85.26^\circ}$ A rms;
$17.29 - j6.92$ kVA.

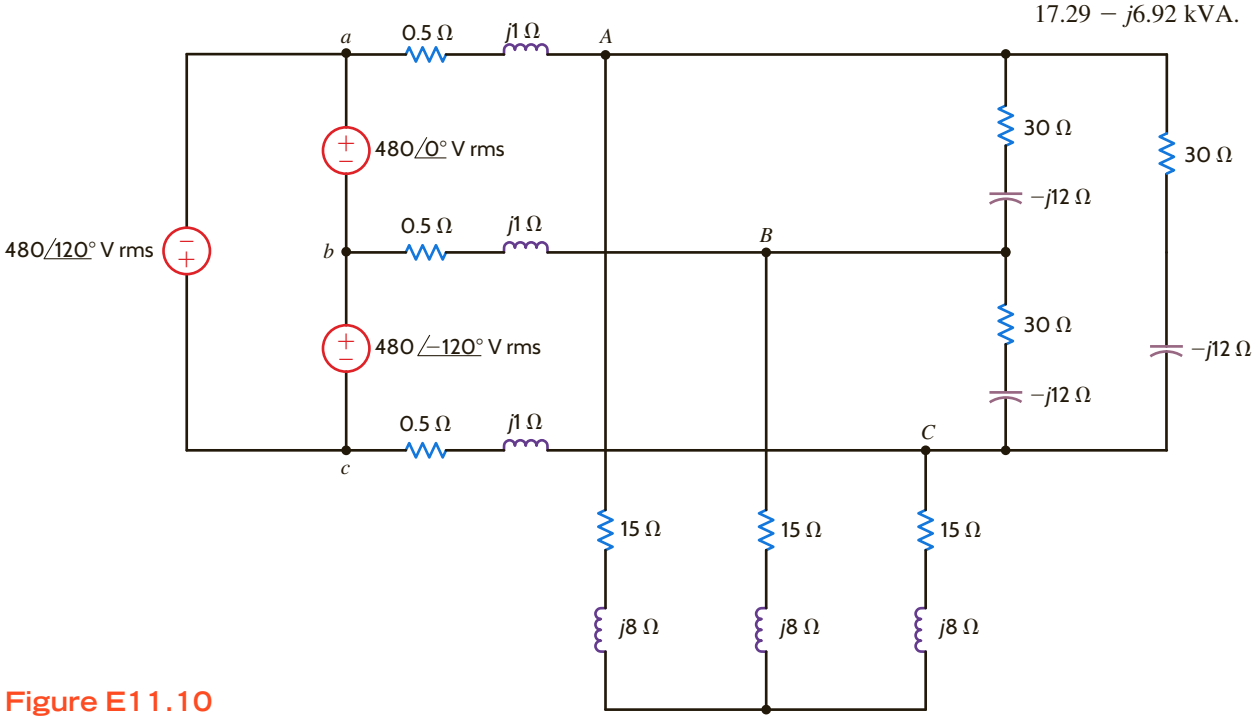

Figure E11.10

11.4 Power Relationships

Whether the load is connected in a wye or a delta, the real and reactive power per phase is

$$P_p = V_p I_p \cos\theta \qquad Q_p = V_p I_p \sin\theta \tag{11.25}$$

where θ is the angle between the phase voltage and the line current. For a Y-connected system, $I_p = I_L$ and $V_p = V_L/\sqrt{3}$, and for a Δ-connected system, $I_p = I_L/\sqrt{3}$ and $V_p = V_L$. Therefore,

$$P_p = \frac{V_L I_L}{\sqrt{3}} \cos\theta \qquad Q_p = \frac{V_L I_L}{\sqrt{3}} \sin\theta \tag{11.26}$$

The total real and reactive power for all three phases is then

$$P_T = 3\,P_P = \sqrt{3}\,V_L I_L \cos\theta \qquad Q_T = 3\,Q_P = \sqrt{3}\,V_L I_L \sin\theta \tag{11.27}$$

and, therefore, the magnitude of the complex power (apparent power) is

$$S_T = \sqrt{P_T^2 + Q_T^2}$$
$$= \sqrt{3}\, V_L I_L$$

and

$$\underline{/\mathbf{S}_T} = \theta$$

EXAMPLE 11.5

A three-phase balanced wye–delta system has a line voltage of 208 V rms. The total real power absorbed by the load is 1200 W. If the power factor angle of the load is 20° lagging, we wish to determine the magnitude of the line current and the value of the load impedance per phase in the delta.

SOLUTION

The line current can be obtained from Eq. (11.26). Since the real power per phase is 400 W,

$$400 = \frac{208 I_L}{\sqrt{3}} \cos 20°$$
$$I_L = 3.54 \text{ A rms}$$

The magnitude of the current in each leg of the delta-connected load is

$$I_\Delta = \frac{I_L}{\sqrt{3}}$$
$$= 2.05 \text{ A rms}$$

Therefore, the magnitude of the delta impedance in each phase of the load is

$$\left|\mathbf{Z}_\Delta\right| = \frac{V_L}{I_\Delta}$$
$$= \frac{208}{2.05}$$
$$= 101.46\ \Omega$$

Since the power factor angle is 20° lagging, the load impedance is

$$\mathbf{Z}_\Delta = 101.46\underline{/20°}$$
$$= 95.34 + j34.70\ \Omega$$

EXAMPLE 11.6

For the circuit in Example 11.2 we wish to determine the real and reactive power per phase at the load and the total real power, reactive power, and complex power at the source.

SOLUTION

From the data in Example 11.2 the complex power per phase at the load is

$$\mathbf{S}_{\text{load}} = \mathbf{VI}^*$$
$$= (113.15\underline{/-1.08°})(5.06\underline{/27.65°})$$
$$= 572.54\underline{/26.57°}$$
$$= 512.07 + j256.09 \text{ VA}$$

Therefore, the real and reactive power per phase at the load are 512.07 W and 256.09 var, respectively.

The complex power per phase at the source is

$$\mathbf{S}_{\text{source}} = \mathbf{VI}^*$$
$$= (120\underline{/0°})(5.06\underline{/27.65°})$$
$$= 607.2\underline{/27.65°}$$
$$= 537.86 + j281.78 \text{ VA}$$

Therefore, total real power, reactive power, and apparent power at the source are 1613.6 W, 845.2 var, and 1821.6 VA, respectively.

EXAMPLE 11.7

A balanced three-phase source serves three loads, as follows:

Load 1: 24 kW at 0.6 lagging power factor
Load 2: 10 kW at unity power factor
Load 3: 12 kVA at 0.8 leading power factor

If the line voltage at the loads is 208 V rms at 60 Hz, we wish to determine the line current and the combined power factor of the loads.

SOLUTION

From the data we find that

$$\mathbf{S}_1 = 24{,}000 + j32{,}000$$
$$\mathbf{S}_2 = 10{,}000 + j0$$
$$\mathbf{S}_3 = 12{,}000\underline{/-36.9^\circ} = 9600 - j7200$$

HINT
The sum of three complex powers:
$\mathbf{S}_{\text{load}} = \mathbf{S}_1 + \mathbf{S}_2 + \mathbf{S}_3$

Therefore,

$$\mathbf{S}_{\text{load}} = 43{,}600 + j24{,}800$$
$$= 50{,}160\underline{/29.63^\circ}\ \text{VA}$$
$$I_L = \frac{|\mathbf{S}_{\text{load}}|}{\sqrt{3}\ V_L}$$
$$= \frac{50{,}160}{208\sqrt{3}}$$
$$I_L = 139.23\ \text{A rms}$$

and the combined power factor is

$$\text{pf}_{\text{load}} = \cos 29.63^\circ$$
$$= 0.869\ \text{lagging}$$

EXAMPLE 11.8

Given the three-phase system in Example 11.7, let us determine the line voltage and power factor at the source if the line impedance is $\mathbf{Z}_{\text{line}} = 0.05 + j0.02\ \Omega$.

SOLUTION

The complex power absorbed by the line impedances is

$$\mathbf{S}_{\text{line}} = 3(R_{\text{line}}I_L^2 + jX_{\text{line}}I_L^2)$$
$$= 2908 + j1163\ \text{VA}$$

HINT
Recall that the complex power for all three lines is
$\mathbf{S}_{\text{line}} = 3I_L^2\mathbf{Z}_{\text{line}}$

The complex power delivered by the source is then

$$\mathbf{S}_S = \mathbf{S}_{\text{load}} + \mathbf{S}_{\text{line}}$$
$$= 43{,}600 + j24{,}800 + 2908 + j1163$$
$$= 53{,}264\underline{/29.17^\circ}\ \text{VA}$$

The line voltage at the source is then

$$V_{L_S} = \frac{S_S}{\sqrt{3}\ I_L}$$
$$= 220.87\ \text{V rms}$$

and the power factor at the source is

$$\text{pf}_S = \cos 29.17^\circ$$
$$= 0.873\ \text{lagging}$$

EXAMPLE 11.9

Let's consider the three-phase system shown in Fig. 11.20. Calculate the real power loss in the line resistance for $V_L = 500$ kV rms and 50 kV rms.

SOLUTION

For $V_L = 500$ kV rms, $I_L = \dfrac{S_{\text{load}}}{\sqrt{3}V_L} = \dfrac{1000}{\sqrt{3}(500)} = 1.155$ kA rms, and the real power losses in the line are $P_{\text{line}} = 3I_L^2R_{\text{line}} = 3(1.155)^2(0.1) = 0.4$ MW.

For $V_L = 50$ kV rms, $I_L = \dfrac{1000}{\sqrt{3}(50)} = 11.55$ kA rms and

$P_{\text{line}} = 3I_L^2R_{\text{line}} = 3(11.55)^2(0.1) = 40$ MW

The line losses at 50 kV rms are 100 times larger than those at 500 kV rms. This example illustrates that power transmission at higher voltages is more efficient because of the reduced losses. The transformer discussed in Chapter 10 allows voltage levels in ac systems to be changed easily. Electric generators at power plants generate line voltages up to 25 kV. Transformers are utilized to step up this voltage for transmission from the plants to the load centers.

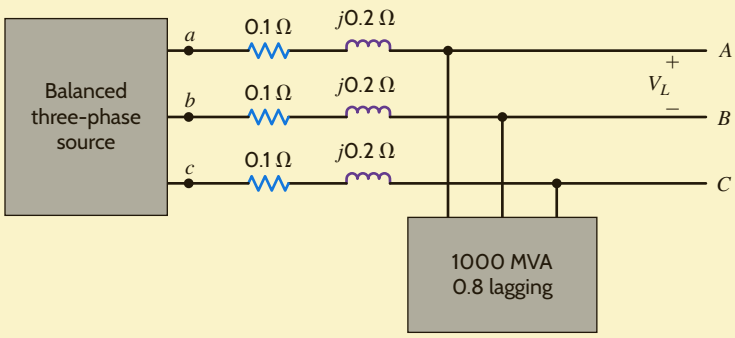

Figure 11.20
Three-phase system for calculation of line losses for different load voltages.

LEARNING ASSESSMENTS

E11.11 A three-phase balanced wye–wye system has a line voltage of 208 V rms. The total real power absorbed by the load is 12 kW at 0.8 pf lagging. Determine the per-phase impedance of the load.

ANSWER:
$\mathbf{Z} = 2.88\underline{/36.87^\circ}\ \Omega$.

E11.12 For the balanced wye–wye system described in Learning Assessment E11.3, determine the real and reactive power and the complex power at both the source and the load.

ANSWER:
$\mathbf{S}_{\text{load}} = 1186.77 + j444.66$ VA;
$\mathbf{S}_{\text{source}} = 1335.65 + j593.55$ VA.

E11.13 A 480-V rms line feeds two balanced three-phase loads. If the two loads are rated as follows,

Load 1: 5 kVA at 0.8 pf lagging
Load 2: 10 kVA at 0.9 pf lagging

determine the magnitude of the line current from the 480-V rms source.

ANSWER:
$I_L = 17.97$ A rms.

E11.14 If the line voltage at the load is 480 V rms in Fig. E11.14, find the line voltage and power factor at the source.

ANSWER:
$V_L = 501.7$ V rms; pf = 0.9568 lagging.

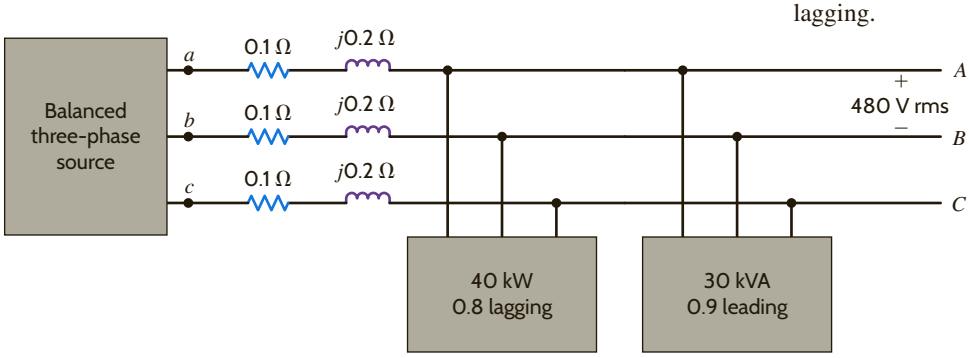

Figure E11.14

EXAMPLE 11.10

Two balanced three-phase systems, X and Y, are interconnected with lines having impedance $\mathbf{Z}_{\text{line}} = 1 + j2\ \Omega$. The line voltages are $\mathbf{V}_{ab} = 12\underline{/0^\circ}$ kV rms and $\mathbf{V}_{AB} = 12\underline{/5^\circ}$ kV rms, as shown in **Fig. 11.21a**. We wish to determine which system is the source, which is the load, and the average power supplied by the source and absorbed by the load.

SOLUTION

When we draw the per-phase circuit for the system as shown in **Fig. 11.21b**, the analysis will be essentially the same as that of Example 9.12.

The network in Fig. 11.21b indicates that

$$\mathbf{I}_{aA} = \frac{\mathbf{V}_{an} - \mathbf{V}_{AN}}{\mathbf{Z}_{\text{line}}}$$

$$= \frac{\dfrac{12{,}000}{\sqrt{3}}\underline{/-30^\circ} - \dfrac{12{,}000}{\sqrt{3}}\underline{/-25^\circ}}{\sqrt{5}\ \underline{/63.43^\circ}}$$

$$= 270.30\underline{/-180.93^\circ}\ \text{A rms}$$

The average power absorbed by system Y is

$$P_Y = \sqrt{3}\ V_{AB} I_{aA} \cos(\theta_{V_{an}} - \theta_{I_{aA}})$$
$$= \sqrt{3}\ (12{,}000)(270.30) \cos(-25^\circ + 180.93^\circ)$$
$$= -5.130\ \text{MW}$$

Note that system Y is not the load, but rather the source and supplies 5.130 MW.

System X absorbs the following average power:

$$P_X = \sqrt{3}\ V_{ab} I_{Aa} \cos(\theta_{V_{an}} - \theta_{I_{aA}})$$

where

$$\mathbf{I}_{Aa} = -\mathbf{I}_{aA} = 270.30\underline{/-0.93^\circ}\ \text{A rms}$$

Therefore,

$$P_X = \sqrt{3}\ (12{,}000)(270.30) \cos(-30^\circ + 0.93^\circ)$$
$$= 4.910\ \text{MW}$$

and hence system X is the load.

The difference in the power supplied by system Y and that absorbed by system X is, of course, the power absorbed by the resistance of the three lines.

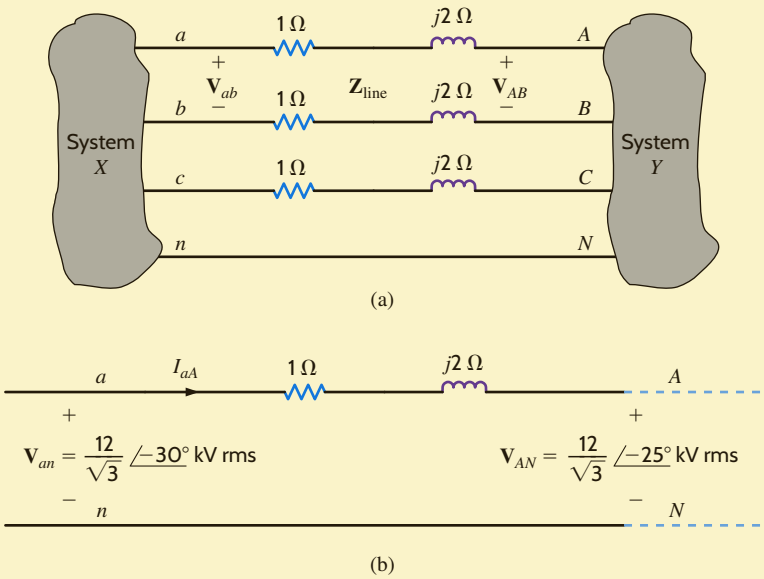

Figure 11.21
Circuits used in Example 11.10: (a) original three-phase system, (b) per-phase circuit.

The preceding example illustrates an interesting point. Note that the phase difference between the two ends of the power line determines the direction of the power flow. Since the numerous power companies throughout the United States are tied together to form the U.S. power grid, the phase difference across the interconnecting transmission lines reflects the manner in which power is transferred between power companies.

Capacitors for power factor correction are usually specified by the manufacturer in vars rather than in farads. Of course, the supplier must also specify the voltage at which the capacitor is designed to operate, and a frequency of 60 Hz is assumed. The relationship between capacitance and the var rating is

$$Q_R = \frac{V^2}{Z_C}$$

where Q_R is the var rating, V is the voltage rating, and Z_C is the capacitor's impedance at 60 Hz. Thus, a 500-V, 600-var capacitor has a capacitance of

$$C = \frac{Q_R}{\omega V^2} = \frac{600}{(377)(500)^2}$$

or

$$C = 6.37\ \mu\text{F}$$

and can be used in any application where the voltage across the capacitor does not exceed the rated value of 500 V.

11.5 Power Factor Correction

In Section 9.7 we illustrated a simple technique for raising the power factor of a load. The method involved judiciously selecting a capacitor and placing it in parallel with the load. In a balanced three-phase system, power factor correction is performed in exactly the same manner. It is important to note, however, that the $\mathbf{S}_{\text{cap}}$ specified in Eq. (9.37) is provided by three capacitors, and in addition, V_{rms} in the equation is the voltage across each capacitor. The following example illustrates the technique.

HINT
Major precautions for three-phase power factor correction:

Must distinguish P_T and P_p. Must use appropriate V_{rms} for Y- and Δ-connections.

EXAMPLE 11.11

In the balanced three-phase system shown in Fig. 11.22, the line voltage is 34.5 kV rms at 60 Hz. We wish to find the values of the capacitors C such that the total load has a power factor of 0.94 leading.

SOLUTION

Following the development outlined in Section 9.7 for single-phase power factor correction, we obtain

$$\begin{aligned}\mathbf{S}_{\text{old}} &= 24\angle\cos^{-1} 0.78 \text{ MVA}\\ &= 18.72 + j15.02 \text{ MVA}\end{aligned}$$

and

$$\begin{aligned}\theta_{\text{new}} &= -\cos^{-1} 0.94\\ &= -19.95°\end{aligned}$$

Therefore,

$$\begin{aligned}\mathbf{S}_{\text{new}} &= 18.72 + j18.72 \tan(-19.95°)\\ &= 18.72 - j6.80 \text{ MVA}\end{aligned}$$

and

$$\begin{aligned}\mathbf{S}_{\text{cap}} &= \mathbf{S}_{\text{new}} - \mathbf{S}_{\text{old}}\\ &= -j21.82 \text{ MVA}\end{aligned}$$

However,

$$-j\omega C\, V_{\text{rms}}^2 = \frac{-j21.82 \text{ MVA}}{3}$$

and since the line voltage is 34.5 kV rms, then

$$(377)\left(\frac{34.5\text{k}}{\sqrt{3}}\right)^2 C = \frac{21.82}{3} \text{ M}$$

Hence,

$$C = 48.6\ \mu\text{F}$$

HINT

The reactive power to be supplied by C is derived from the expression

$$jQ_{\text{cap}} = -j\omega C V_{\text{rms}}^2$$

The phase voltage for the Y connection is

$$V_{\text{Y}} = \frac{34.5\text{k}}{\sqrt{3}}$$

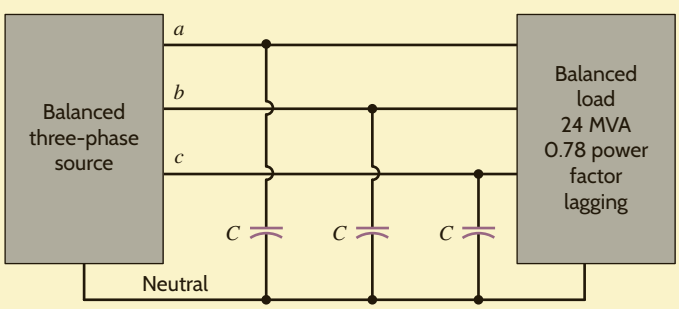

Figure 11.22

Network used in Example 11.11.

LEARNING ASSESSMENTS

E11.15 Find C in Example 11.11 such that the load has a power factor of 0.90 lagging.

ANSWER:
$C = 13.26\ \mu\text{F}$.

E11.16 Find C in Fig. E11.16 such that the power factor of the source is 0.98 lagging.

ANSWER:
$C = 14.2\ \mu\text{F}$.

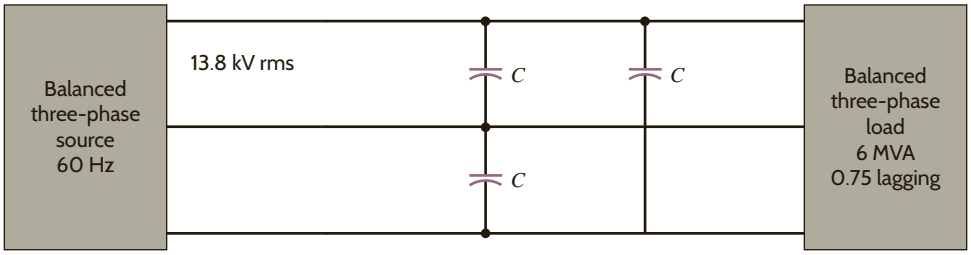

Figure E11.16

In the following example, we examine the selection of both the conductor and the capacitor in a practical power factor situation.

EXAMPLE 11.12

Two stores, as shown in Fig. 11.23, are located at a busy intersection. The stores are fed from a balanced three-phase 60-Hz source with a line voltage of 13.8 kV rms. The power line is constructed of a #4ACSR (aluminum cable steel reinforced) conductor that is rated at 170 A rms.

A third store, shown in Fig. 11.23, wishes to locate at the intersection. Let us determine (1) if the #4ACSR conductor will permit the addition of this store, and (2) the value of the capacitors connected in wye that are required to change the overall power factor for all three stores to 0.92 lagging.

SOLUTION

1. The complex power for each of the three loads is

$$\mathbf{S}_1 = 700\underline{/36.9^\circ} = 560 + j420 \text{ kVA}$$
$$\mathbf{S}_2 = 1000\underline{/60^\circ} = 500 + j866 \text{ kVA}$$
$$\mathbf{S}_3 = 800\underline{/25.8^\circ} = 720 + j349 \text{ kVA}$$

Therefore, the total complex power is

$$\begin{aligned}\mathbf{S}_T &= \mathbf{S}_1 + \mathbf{S}_2 + \mathbf{S}_3\\ &= 1780 + j1635\\ &= 2417\underline{/42.57^\circ} \text{ kVA}\end{aligned}$$

Since

$$S_T = \sqrt{3}\, V_L I_L$$

the line current is

$$\begin{aligned}I_L &= \frac{(2417)(10^3)}{\sqrt{3}(13.8)(10^3)}\\ &= 101.1 \text{ A rms}\end{aligned}$$

Figure 11.23
Circuit used in Example 11.12.

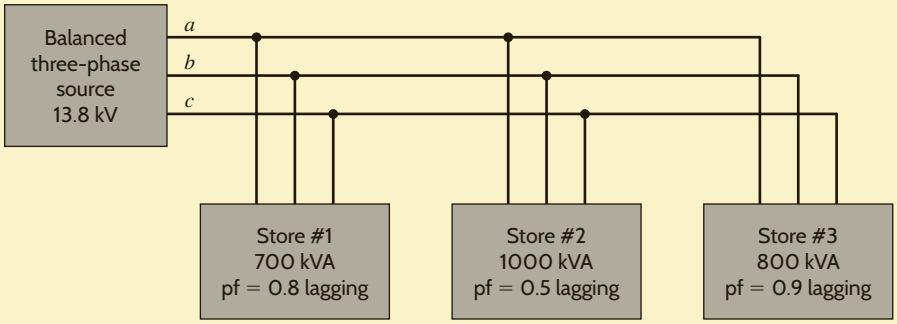

Since this value is well below the rated value of 170 A rms, the conductor is sized properly and we can safely add the third store.

2. The combined power factor for the three loads is found from the expression

$$\cos\theta = \text{pf} = \frac{1780}{2417} = 0.7365 \text{ lagging}$$

By adding capacitors we wish to change this power factor to 0.92 lagging. This new power factor corresponds to a θ_{new} of 23.07°. Therefore, the new complex power is

$$\begin{aligned}\mathbf{S}_{\text{new}} &= 1780 + j1780 \tan(23.07°)\\ &= 1780 + j758.28 \text{ kVA}\end{aligned}$$

As illustrated in Fig. 9.17, the difference between $\mathbf{S}_{\text{new}}$ and $\mathbf{S}_T$ is that supplied by the purely reactive capacitor and, therefore,

$$\mathbf{S}_{\text{cap}} = jQ_C = \mathbf{S}_{\text{new}} - \mathbf{S}_T$$

or

$$\begin{aligned}jQ_C &= j(758.28 - 1635)\\ &= -j876.72 \text{ kVA}\end{aligned}$$

Thus,

$$-j\omega C\, V_{\text{rms}}^2 = \frac{-j876.72\text{k}}{3}$$

and

$$377\left(\frac{13.8 \times 10^3}{\sqrt{3}}\right)^2 C = \frac{876.72}{3} \times 10^3$$

Therefore,

$$C = 12.2\ \mu\text{F}$$

Hence, three capacitors of this value connected in wye at the load will yield a total power factor of 0.92 lagging.

Finally, recall that our entire discussion in this chapter has focused on balanced systems. It is extremely important, however, to point out that in an unbalanced three-phase system the problem is much more complicated.

SUMMARY

- An important advantage of the balanced three-phase system is that it provides very smooth power delivery.
- Because of the balanced condition, it is possible to analyze a circuit on a per-phase basis, thereby providing a significant computational shortcut to a solution.
- A balanced three-phase voltage source has three sinusoidal voltages of the same magnitude and frequency, and each voltage is 120° out of phase with the others. A positive-phase-sequence balanced voltage source is one in which $\mathbf{V}_{bn}$ lags $\mathbf{V}_{an}$ by 120° and $\mathbf{V}_{cn}$ lags $\mathbf{V}_{bn}$ by 120°.
- The relationships between wye- and delta-connected sources are shown in Table 11.1.
- The three-phase terminology is shown in Table 11.2.
- In a balanced system the voltages and currents sum to zero.

$$\mathbf{V}_{an} + \mathbf{V}_{bn} + \mathbf{V}_{cn} = 0$$

$$\mathbf{I}_a + \mathbf{I}_b + \mathbf{I}_c = 0 \quad \text{(no current in the neutral line)}$$

and

$$\mathbf{V}_{ab} + \mathbf{V}_{bc} + \mathbf{V}_{ca} = 0$$
$$\mathbf{I}_{ab} + \mathbf{I}_{bc} + \mathbf{I}_{ca} = 0$$

- The steps recommended for solving balanced three-phase ac circuits are as follows:
  1. If the source/load connection is not wye–wye, then transform the system to a wye–wye connection.
  2. Determine the unknown phasors in the wye–wye connection and deal only with the phase a.
  3. Convert the now-known phasors back to the corresponding phasors in the original connection.
- Power factor correction in a balanced three-phase environment is performed in the same manner as in the single-phase case. Three capacitors are put in parallel with the load to reduce the lagging phase caused by the three-phase load.

TABLE 11.2 Three-phase terminology

QUALITY	WYE	DELTA
	Line current (I_L)	
$\mathbf{I}_a$, $\mathbf{I}_b$, $\mathbf{I}_c$	Phase current (I_p)	
	Line-to-neutral voltage (V_p)	
$\mathbf{V}_{an}$, $\mathbf{V}_{bn}$, $\mathbf{V}_{cn}$	Phase voltage (V_p)	
$\mathbf{V}_{ab}$, $\mathbf{V}_{bc}$, $\mathbf{V}_{ca}$	Line-to-line, phase-to-phase, line voltage (V_L)	
		Phase voltage (V_p)
$\mathbf{I}_{ab}$, $\mathbf{I}_{bc}$, $\mathbf{I}_{ca}$		Phase current (I_p)

PROBLEMS

11.1 Sketch a phasor representation of an *abc*-sequence balanced three-phase Y-connected source, including $\mathbf{V}_{an}$, $\mathbf{V}_{bn}$, and $\mathbf{V}_{cn}$ if $\mathbf{V}_{an} = 120\underline{/15^\circ}$ V rms.

11.2 A positive-sequence three-phase balanced wye voltage source has a line voltage of $\mathbf{V}_{bc} = 200\underline{/-30^\circ}$ V. Determine the phase voltages of the source.

11.3 For a balanced three-phase wye–wye connection with $\mathbf{Z}_Y = 50\underline{/20^\circ}\ \Omega$, determine the phase voltages, line voltages, line currents, and phase currents if $\mathbf{V}_{an} = 120\underline{/0^\circ}$ V. Assume a positive phase sequence.

11.4 A positive-sequence three-phase balanced wye voltage source has a phase voltage of $\mathbf{V}_{an} = 240\underline{/90^\circ}$ V rms. Determine the line voltages of the source.

11.5 Sketch a phasor representation of a balanced three-phase system containing both phase voltages and line voltages if $\mathbf{V}_{ab} = 208\underline{/60^\circ}$ V rms. Label all phasors and assume an *abc*-phase sequence.

11.6 Find the equivalent $\mathbf{Z}$ of the network in Fig. P11.6.

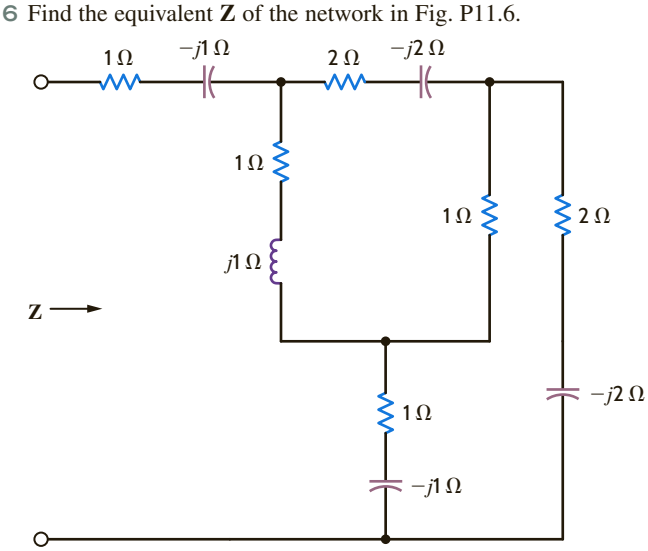

Figure P11.6

11.7 Find the equivalent **Z** of the network in Fig. P11.7.

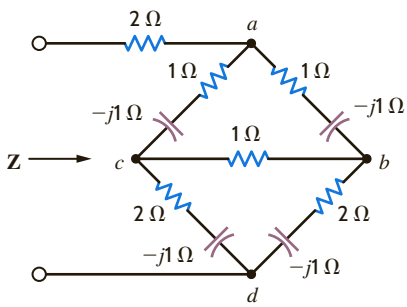

Figure P11.7

11.8 A positive-sequence balanced three-phase wye-connected source with a phase voltage of 120 V rms supplies power to a balanced wye-connected load. The per-phase load impedance is $40 + j10\ \Omega$. Determine the line currents in the circuit if $\angle \mathbf{V}_{an} = 0°$.

11.9 Find the equivalent impedances $\mathbf{Z}_{ab}$, $\mathbf{Z}_{bc}$, and $\mathbf{Z}_{ca}$ in the network in Fig. P11.9.

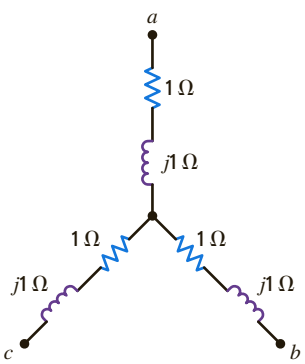

Figure P11.9

11.10 Find the equivalent **Z** of the network in Fig. P11.10.

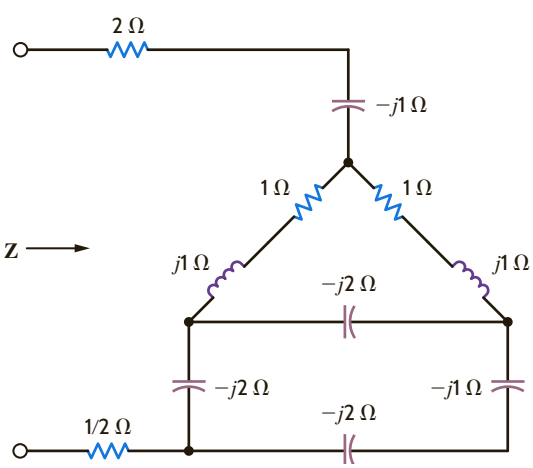

Figure P11.10

11.11 A positive-sequence balanced three-phase wye-connected source supplies power to a balanced wye-connected load. The line voltage is 100 V. The line impedance is $2\ \Omega$ per phase, and the load impedance is $50 + j30\ \Omega$ per phase. Determine the load voltages if $\angle \mathbf{V}_{an} = 0°$.

11.12 A positive-sequence balanced three-phase wye-connected source supplies power to a balanced wye-connected load. The magnitude of the line voltages is 208 V rms. If the load impedance per phase is $36 + j12\ \Omega$, determine the line currents if $\angle \mathbf{V}_{an} = 0°$.

11.13 In a three-phase balanced wye–wye system, the source is an *abc*-sequence set of voltages with $\mathbf{V}_{an} = 120\angle 60°$ rms. The per-phase impedance of the load is $12 + j16\ \Omega$. If the line impedance per phase is $0.8 + j1.4\ \Omega$, find the line currents and the load voltages.

11.14 In a balanced three-phase system, the *abc*-phase-sequence source is delta-connected and $\mathbf{V}_{ab} = 120\angle 30°$ V rms. The load consists of two balanced wyes with phase impedances of $10 + j1\ \Omega$ and $20 + j5\ \Omega$. If the line impedance is zero, find the line currents and the load phase voltage.

11.15 An *abc*-phase-sequence three-phase balanced wye-connected 60-Hz source supplies a balanced delta-connected load. The phase impedance in the load consists of a 20-Ω resistor in series with a 50-mH inductor, and the phase voltage at the source is $\mathbf{V}_{an} = 120\angle 20°$ V rms. If the line impedance is zero, find the line currents in the system.

11.16 An *abc*-phase-sequence three-phase balanced wye-connected source supplies power to a balanced wye-connected load. The impedance per phase in the load is $14 + j12\ \Omega$. If the source voltage for the *a* phase is $\mathbf{V}_{an} = 120\angle 80°$ V rms, and the line impedance is zero, find the phase currents in the wye-connected source.

11.17 An *abc*-sequence balanced three-phase wye-connected source supplies power to a balanced wye-connected load. The line impedance per phase is $1 + j5\ \Omega$, and the load impedance per phase is $25 + j25\ \Omega$. If the source line voltage $\mathbf{V}_{ab} = 208\angle 0°$ V rms, find the line currents.

11.18 An *abc*-sequence set of voltages feeds a balanced three-phase wye–wye system. If the line current in the *a* phase is $16.78\angle 20.98°$ A rms, the line impedance is $1.2 + j1.8\ \Omega$, and the input voltage $\mathbf{V}_{ab} = 440\angle 70°$ V rms, find the load impedance.

11.19 An *abc*-sequence set of voltages feeds a balanced three-phase wye–wye system. The line and load impedances are $1 + j1\ \Omega$ and $10 + j10\ \Omega$, respectively. If the load voltage on the *a* phase is $\mathbf{V}_{AN} = 110\angle 30°$ V rms, determine the line voltages of the input.

11.20 In a balanced three-phase wye–wye system, the source is an *abc*-sequence set of voltages. The load voltage on the *a* phase is $\mathbf{V}_{AN} = 108.58\angle 79.81°$ V rms, $\mathbf{Z}_{\text{line}} = 1 + j1.4\ \Omega$, and $\mathbf{Z}_{\text{load}} = 10 + j13\ \Omega$. Determine the input sequence of voltages.

11.21 An *abc*-sequence balanced three-phase wye-connected source supplies power to a balanced wye-connected load. The line impedance per phase is $1 + j0\ \Omega$, and the load impedance per phase is $20 + j20\ \Omega$. If the source line voltage $\mathbf{V}_{ab}$ is $100\angle 0°$ V rms, find the line currents.

11.22 In a balanced three-phase wye–wye system, the source is an *abc*-sequence set of voltages. The load voltage on the *a* phase is $\mathbf{V}_{AN} = 120\angle 60°$ V rms, $\mathbf{Z}_{\text{line}} = 2 + j1.4\ \Omega$, and $\mathbf{Z}_{\text{load}} = 10 + j10\ \Omega$. Determine the input voltages.

11.23 In a balanced three-phase wye–wye system, the source is an *abc*-sequence set of voltages. $\mathbf{Z}_{\text{line}} = 1 + j1\ \Omega$, $\mathbf{Z}_{\text{load}} = 14 + j12\ \Omega$, and the load voltage on the *a* phase is $\mathbf{V}_{AN} = 440\angle 30^\circ$ V rms. Find the line voltage $\mathbf{V}_{ab}$.

11.24 In a balanced three-phase wye–wye system, the source is an *abc*-sequence set of voltages. The load voltage on the *a* phase is $\mathbf{V}_{AN} = 110\angle 80^\circ$ V rms, $\mathbf{Z}_{\text{line}} = 1 + j1.4\ \Omega$, and $\mathbf{Z}_{\text{load}} = 10 + j13\ \Omega$. Determine the input sequence of the line-to-neutral voltages.

11.25 A balanced *abc*-sequence of voltages feeds a balanced three-phase wye–wye system. The line and load impedances are $0.6 + j0\ \Omega$ and $8 + j12\ \Omega$, respectively. The load voltage on the *a* phase is $\mathbf{V}_{AN} = 116.63\angle 10^\circ$ V rms. Find the line voltage $\mathbf{V}_{ab}$.

11.26 In a balanced three-phase wye–wye system, the source is an *abc*-sequence set of voltages. $\mathbf{Z}_{\text{line}} = 1 + j1.8\ \Omega$, $\mathbf{Z}_{\text{load}} = 14 + j12\ \Omega$, and the load voltage on the *a* phase is $\mathbf{V}_{AN} = 398.1\angle 17.99^\circ$ V rms. Find the line voltage $\mathbf{V}_{ab}$.

11.27 In a balanced three-phase wye–delta system, the source has an *abc* phase sequence and $\mathbf{V}_{an} = 120\angle 40^\circ$ V rms. The line and load impedances are $0.5 + j0.4\ \Omega$ and $24 + j18\ \Omega$, respectively. Find the delta currents in the load.

11.28 In a balanced three-phase wye–wye system, the load impedance is $8 + j4\ \Omega$. The source has phase sequence *abc* and $\mathbf{V}_{an} = 120\angle 0^\circ$ V rms. If the load voltage is $\mathbf{V}_{AN} = 111.62\angle -1.33^\circ$ V rms, determine the line impedance.

11.29 In a balanced three-phase wye–wye system, the total power loss in the lines is 400 W. $\mathbf{V}_{AN} = 105.28\angle 31.56^\circ$ V rms and the power factor of the load is 0.77 lagging. If the line impedance is $2 + j1\ \Omega$, determine the load impedance.

11.30 In a balanced three-phase wye–wye system, the load impedance is $10 + j1\ \Omega$. The source has phase sequence *abc* and the line voltage $\mathbf{V}_{ab} = 220\angle 30^\circ$ V rms. If the load voltage $\mathbf{V}_{AN} = 120\angle 0^\circ$ V rms, determine the line impedance.

11.31 In a balanced three-phase wye–wye system, the load impedance is $20 + j12\ \Omega$. The source has an *abc*-phase sequence and $\mathbf{V}_{an} = 120\angle 0^\circ$ V rms. If the load voltage is $\mathbf{V}_{AN} = 111.49\angle -0.2^\circ$ V rms, determine the magnitude of the line current if the load is suddenly short-circuited.

11.32 In a balanced three-phase wye–wye system, the source is an *abc*-sequence set of voltages and $\mathbf{V}_{an} = 120\angle 40^\circ$ V rms. If the *a*-phase line current and line impedance are known to be $7.10\angle -10.28^\circ$ A rms and $0.8 + j1\ \Omega$, respectively, find the load impedance.

11.33 In a balanced three-phase wye–wye system, the source is an *abc*-sequence set of voltages and $\mathbf{V}_{an} = 153.53\angle 30.13^\circ$ V rms. The load voltage on the *a* phase is $110.65\angle 29.03^\circ$ V rms and the load impedance is $16 + j20\ \Omega$. Find the line impedance.

11.34 A balanced three-phase system has a balanced wye load in parallel with a balanced delta load. If the source is a balanced wye connection with a positive phase sequence and the phase voltage $\mathbf{V}_{an} = 200\angle 30^\circ$ V, determine the line currents when the load impedances, $\mathbf{Z}_\Delta = 50 + j70\ \Omega$ and $\mathbf{Z}_Y = 15 + j30\ \Omega$, are converted to an equivalent delta.

11.35 Repeat Problem 11.34 if the loads are converted to an equivalent wye. Compare the results of both problems.

11.36 A balanced wye–delta system with a positive phase sequence has a load current of $\mathbf{I}_{AB} = 25\angle 60^\circ$ A. Determine all the line currents.

11.37 In a balanced wye–delta system with a positive phase sequence, the load per phase is $20 + j10\ \Omega$. If the voltage $\mathbf{V}_{ab} = 208\angle 30^\circ$ V, determine the line currents in the system.

11.38 A three-phase balanced system has a load consisting of a delta in parallel with a wye. The impedance per phase for the delta is $12 + j9\ \Omega$ and for the wye is $6 + j3\ \Omega$. The source is a balanced wye with a positive phase sequence. If $\mathbf{V}_{an} = 120\angle 30^\circ$ V, determine the line currents.

11.39 Determine the line currents in Problem 11.38 if $\mathbf{V}_{ab} = 100\angle -60^\circ$ V.

11.40 In a three-phase balanced delta–delta system, the source has an *abc*-phase sequence. The line and load impedances are $0.5 + j0.1\ \Omega$ and $10 + j5\ \Omega$, respectively. If $\mathbf{V}_{AB} = 115\angle 30^\circ$ V rms, find the phase voltage of the sources.

11.41 In a balanced three-phase system, the source has an *abc*-phase sequence and is connected in delta. There are two loads connected in parallel. Load 1 is connected in wye and has a phase impedance of $6 + j2\ \Omega$. Load 2 is connected in delta and has a phase impedance of $9 + j3\ \Omega$. The line impedance is $0.6 + j0.2\ \Omega$. Determine the phase voltages of the source if the current in the *a* phase of load 1 is $\mathbf{I}_{AN_1} = 10\angle 30^\circ$ A rms.

11.42 An *abc*-phase-sequence three-phase balanced wye-connected 60-Hz source supplies a balanced delta-connected load. The phase impedance in the load consists of a 20-Ω resistor series with a 20-mH inductor, and the phase voltage at the source is $\mathbf{V}_{an} = 120\angle 30^\circ$ V rms. If the line impedance is zero, find the line currents in the system.

11.43 In a balanced three-phase wye–wye system, the source is an *abc*-sequence set of voltages and $\mathbf{V}_{an} = 120\angle 50^\circ$ V rms. The load voltage on the *a* phase is $110\angle 50^\circ$ V rms, and the load impedance is $16 + j20\ \Omega$. Find the line impedance.

11.44 In a balanced three-phase delta–wye system, the source has an *abc*-phase sequence. The line and load impedances are $0.6 + j0.3\ \Omega$ and $12 + j7\ \Omega$, respectively. If the line current $\mathbf{I}_{aA} = 9.6\angle -20^\circ$ A rms, determine the phase voltages of the source.

11.45 In a three-phase balanced system, a delta-connected source supplies power to a wye-connected load. If the line impedance is $0.2 + j0.4\ \Omega$, the load impedance $6 + j4\ \Omega$, and the source phase voltage $\mathbf{V}_{ab} = 210\angle 40^\circ$ V rms, find the magnitude of the line voltage at the load.

11.46 An *abc*-sequence set of voltages feeds a balanced three-phase wye–wye system. If $\mathbf{V}_{an} = 440\angle 30^\circ$ V rms, $\mathbf{V}_{AN} = 413.28\angle 29.78^\circ$ V rms, and $\mathbf{Z}_{\text{line}} = 2 + j1.5\ \Omega$, find the load impedance.

11.47 An *abc*-phase-sequence three-phase balanced wye-connected source supplies a balanced delta-connected load. The impedance per phase of the delta load is $20 + j4\ \Omega$. If $\mathbf{V}_{AB} = 115\angle 35^\circ$ V rms, find the line current.

11.48 In a three-phase balanced system, a delta-connected source supplies power to a wye-connected load. If the line impedance is $0.2 + j0.4\ \Omega$, the load impedance is $3 + j2\ \Omega$, and the source phase voltage $\mathbf{V}_{ab} = 208\angle 10^\circ$ V rms, find the magnitude of the line voltage at the load.

11.49 In a balanced three-phase wye–wye system, the source is an *abc*-sequence set of voltages and $\mathbf{V}_{an} = 120\underline{/40^\circ}$ V rms. If the *a*-phase line current and line impedance are known to be $6\underline{/15^\circ}$ A rms and $1 + j1\ \Omega$, respectively, find the load impedance.

11.50 An *abc*-phase-sequence three-phase balanced wye-connected source supplies a balanced delta-connected load. The impedance per phase in the delta load is $12 + j6\ \Omega$. The line voltage at the source is $\mathbf{V}_{ab} = 120\sqrt{3}\underline{/40^\circ}$ V rms. If the line impedance is zero, find the line currents in the balanced wye–delta system.

11.51 An *abc*-phase-sequence three-phase balanced wye-connected source supplies power to a balanced delta-connected load. The impedance per phase in the load is $14 + j7\ \Omega$. If the source voltage for the *a* phase is $\mathbf{V}_{an} = 120\underline{/80^\circ}$ V rms and the line impedance is zero, find the phase currents in the wye-connected source.

11.52 In a three-phase balanced delta–delta system, the source has an *abc*-phase sequence. The line and load impedances are $0.3 + j0.2\ \Omega$ and $9 + j6\ \Omega$, respectively. If the load current in the delta is $\mathbf{I}_{AB} = 15\underline{/40^\circ}$ A rms, find the phase voltages of the source.

11.53 An *abc*-phase-sequence three-phase balanced wye-connected source supplies a balanced delta-connected load. The impedance per phase of the delta load is $10 + j8\ \Omega$. If the line impedance is zero and the line current in the *a* phase is known to be $\mathbf{I}_{aA} = 28.10\underline{/-28.66^\circ}$ A rms, find the load voltage $\mathbf{V}_{AB}$.

11.54 In a balanced three-phase wye–delta system, the source has an *abc*-phase sequence and $\mathbf{V}_{an} = 120\underline{/0^\circ}$ V rms. If the line impedance is zero and the line current $\mathbf{I}_{aA} = 5\underline{/20^\circ}$ A rms, find the load impedance per phase in the delta.

11.55 A three-phase load impedance consists of a balanced wye in parallel with a balanced delta. What is the equivalent wye load and what is the equivalent delta load if the phase impedances of the wye and delta are $6 + j3\ \Omega$ and $15 + j10\ \Omega$, respectively?

11.56 In a balanced three-phase system, the source is a balanced wye with an *abc*-phase sequence and $\mathbf{V}_{ab} = 215\underline{/50^\circ}$ V rms. The load is a balanced wye in parallel with a balanced delta. The phase impedance of the wye is $5 + j3\ \Omega$, and the phase impedance of the delta is $18 + j12\ \Omega$. If the line impedance is $1 + j0.8\ \Omega$, find the line currents and the phase currents in the loads.

11.57 In a balanced three-phase system, the source has an *abc*-phase sequence and is connected in delta. There are two loads connected in parallel. The line connecting the source to the loads has an impedance of $0.2 + j0.1\ \Omega$. Load 1 is connected in wye, and the phase impedance is $4 + j2\ \Omega$. Load 2 is connected in delta, and the phase impedance is $12 + j9\ \Omega$. The current $\mathbf{I}_{AB}$ in the delta load is $16\underline{/45^\circ}$ A rms. Find the phase voltage of the source.

11.58 A balanced three-phase delta-connected source supplies power to a load consisting of a balanced delta in parallel with a balanced wye. The phase impedance of the delta is $24 + j12\ \Omega$, and the phase impedance of the wye is $12 + j8\ \Omega$. The *abc*-phase-sequence source voltages are $\mathbf{V}_{ab} = 440\underline{/60^\circ}$ V rms, $\mathbf{V}_{bc} = 440\underline{/-60^\circ}$ V rms, and $\mathbf{V}_{ca} = 440\underline{/-180^\circ}$ V rms, and the line impedance per phase is $1 + j0.08\ \Omega$. Find the line currents and the power absorbed by the wye-connected load.

11.59 Calculate the instantaneous power for a balanced three-phase load in which the load current is $2\underline{/-40^\circ}$ A rms and the load voltage is $240\underline{/0^\circ}$ V rms.

11.60 A three-phase positive sequence wye-connected source supplying 1.20 kVA with a power factor of 0.60 lagging has a line voltage $\mathbf{V}_{ab} = 120\underline{/45^\circ}$ V rms and is connected to two balanced wye loads. If the first wye-connected load is purely inductive and uses 800 var, find the phase impedance of the second load.

11.61 Determine the magnitude of the current flowing through each of the loads in the network described in Problem 11.60.

11.62 A delta-connected three-phase source with a positive phase sequence is connected through a transmission line with an impedance of $0.05 + j0.1\ \Omega$ per phase to a wye-connected load with a per-phase impedance of $20 + j8\ \Omega$. The source voltages are $\mathbf{V}_{ab} = 208\underline{/40^\circ}$ V rms, $\mathbf{V}_{bc} = 208\underline{/-80^\circ}$ V rms, and $\mathbf{V}_{ca} = 208\underline{/-200^\circ}$ V rms. Determine the line currents, the magnitude of the line voltage at the load, and the real power loss in the lines.

11.63 A balanced three-phase wye–wye system has two parallel loads. Load 1 is rated at 4000 VA, 0.9 pf lagging, and load 2 is rated at 3600 VA, 0.85 pf lagging. If the line voltage is 208 V rms, determine the magnitude of the line current.

11.64 In a balanced three-phase system, the *abc*-phase-sequence source is wye-connected and $\mathbf{V}_{an} = 120\underline{/20^\circ}$ V rms. The load consists of two balanced wyes with phase impedances of $8 + j2\ \Omega$ and $12 + j3\ \Omega$. If the line impedance is zero, find the line currents and the phase current in each load.

11.65 In a balanced three-phase delta–delta system, the source has an *abc*-phase sequence. The phase angle for the source voltage is $\underline{/\mathbf{V}_{ab}} = 40^\circ$ and $\mathbf{I}_{ab} = 4\underline{/15^\circ}$ A rms. If the total power absorbed by the load is 1400 W, find the load impedance.

11.66 In a balanced three-phase system, the source is a balanced wye with an *abc*-phase sequence and $\mathbf{V}_{ab} = 208\underline{/60^\circ}$ V rms. The load consists of a balanced wye with a phase impedance of $8 + j5\ \Omega$ in parallel with a balanced delta with a phase impedance of $21 + j12\ \Omega$. If the line impedance is $1.2 + j1\ \Omega$, find the phase currents in the balanced wye load.

11.67 In a balanced three-phase system, the source has an *abc*-phase sequence and is connected in delta. There are two parallel wye-connected loads. The phase impedance of load 1 and load 2 is $4 + j4\ \Omega$ and $10 + j4\ \Omega$, respectively. The line impedance connecting the source to the loads is $0.3 + j0.2\ \Omega$. If the current in the *a* phase of load 1 is $\mathbf{I}_{AN_1} = 10\underline{/20^\circ}$ A rms, find the delta currents in the source.

11.68 An *abc*-phase-sequence balanced three-phase source feeds a balanced load. The system is connected wye–wye and $\underline{/\mathbf{V}_{an}} = 0^\circ$. The line impedance is $0.5 + j0.2\ \Omega$, the load impedance is $16 + j10\ \Omega$, and the total power absorbed by the load is 2000 W. Determine the magnitude of the source voltage $\mathbf{V}_{an}$.

11.69 The magnitude of the complex power (apparent power) supplied by a three-phase balanced wye–wye system is 3600 VA. The line voltage is 208 V rms. If the line

impedance is negligible and the power factor angle of the load is 25°, determine the load impedance.

11.70 An *abc*-sequence wye-connected source having a phase-*a* voltage of $120\underline{/0°}$ V rms is attached to a wye-connected load having a per-phase impedance of $100\underline{/70°}$ Ω. If the line impedance is $1\underline{/20°}$ Ω, determine the total complex power produced by the voltage sources and the real and reactive power dissipated by the load.

11.71 A three-phase balanced wye–wye system has a line voltage of 208 V rms. The line current is 6 A rms and the total real power absorbed by the load is 1800 W. Determine the load impedance per phase if the line impedance is negligible.

11.72 A three-phase *abc*-sequence wye-connected source supplies 14 kVA with a power factor of 0.75 lagging to a delta load. If the delta load consumes 12 kVA at a power factor of 0.7 lagging and has a phase current of $10\underline{/-30°}$ A rms, determine the per-phase impedance of the load and the line.

11.73 In a balanced three-phase wye–wye system, the source is an *abc*-sequence set of voltages and $\mathbf{V}_{an} = 120\underline{/30°}$ V rms. The power absorbed by the load is 3435 W and the load impedance is $10 + j2$ Ω. Find the two possible line impedances if the power generated by the source is 3774 W. Which line impedance is more likely to occur in an actual power transmission system?

11.74 Two small industrial plants represent balanced three-phase loads. The plants receive their power from a balanced three-phase source with a line voltage of 4.6 kV rms. Plant 1 is rated at 300 kVA, 0.8 pf lagging, and plant 2 is rated at 350 kVA, 0.8 pf lagging. Determine the power line current.

11.75 A cluster of loads is served by a balanced three-phase source with a line voltage of 4160 V rms. Load 1 is 240 kVA at 0.8 pf lagging and load 2 is 160 kVA at 0.92 pf lagging. A third load is unknown except that it has a power factor of unity. If the line current is measured and found to be 62 A rms, find the complex power of the unknown load.

11.76 A three-phase *abc*-sequence wye-connected source supplies 14 kVA with a power factor of 0.75 lagging to a parallel combination of a wye load and a delta load. If the wye load consumes 9 kVA at a power factor of 0.6 lagging and has an *a*-phase current of $10\underline{/-30°}$ A rms, determine the phase impedance of the delta load.

11.77 In a balanced three-phase system, the source has an *abc*-phase sequence, is wye-connected, and $\mathbf{V}_{an} = 120\underline{/20°}$ V rms. The source feeds two parallel loads, both of which are wye-connected. The impedance of load 1 is $8 + j6$ Ω. The complex power for the *a* phase of load 2 is $600\underline{/36°}$ VA. Find the line current for the *a* phase and the total complex power of the source.

11.78 A balanced three-phase source serves the following loads:

Load 1: 60 kVA at 0.8 pf lagging

Load 2: 30 kVA at 0.75 pf lagging

The line voltage at the load is 208 V rms at 60 Hz. Determine the line current and the combined power factor at the load.

11.79 A balanced three-phase source serves two loads:

Load 1: 36 kVA at 0.8 pf lagging

Load 2: 18 kVA at 0.6 pf lagging

The line voltage at the load is 208 V rms at 60 Hz. Find the line current and the combined power factor at the load.

11.80 A balanced three-phase source supplies power to three loads. The loads are

Load 1: 30 kVA at 0.8 pf lagging

Load 2: 24 kW at 0.6 pf leading

Load 3: unknown

The line voltage at the load and line current at the source are 208 V rms and 166.8 A rms, respectively. If the combined power factor at the load is unity, find the unknown load.

11.81 A balanced three-phase source serves the following loads:

Load 1: 18 kVA at 0.8 pf lagging

Load 2: 10 kVA at 0.7 pf leading

Load 3: 10 kW at unity pf

Load 4: 16 kVA at 0.6 pf lagging

The line voltage at the load is 208 V rms at 60 Hz, and the line impedance is $0.02 + j0.04$ Ω. Find the line voltage and power factor at the source.

11.82 A balanced three-phase source supplies power to three loads. The loads are

Load 1: 24 kVA at 0.6 pf lagging

Load 2: 10 kW at 0.75 pf lagging

Load 3: unknown

If the line voltage at the load is 208 V rms, the magnitude of the total complex power is 35.52 kVA, and the combined power factor at the load is 0.88 lagging, find the unknown load.

11.83 A balanced three-phase source serves the following loads:

Load 1: 20 kVA at 0.8 pf lagging

Load 2: 10 kVA at 0.7 pf leading

Load 3: 10 kW at unity pf

Load 4: 16 kVA at 0.6 pf lagging

The line voltage at the load is 208 V rms at 60 Hz, and the line impedance is $0.02 + j0.04$ Ω. Find the line voltage and power factor at the source.

11.84 A small shopping center contains three stores that represent three balanced three-phase loads. The power lines to the shopping center represent a three-phase source with a line voltage of 13.8 kV rms. The three loads are

Load 1: 400 kVA at 0.9 pf lagging

Load 2: 200 kVA at 0.85 pf lagging

Load 3: 100 kVA at 0.90 pf lagging

Find the power line current.

11.85 The following loads are served by a balanced three-phase source:

Load 1: 20 kVA at 0.8 pf lagging

Load 2: 4 kVA at 0.8 pf leading

Load 3: 10 kVA at 0.75 pf lagging

The load voltage is 208 V rms at 60 Hz. If the line impedance is negligible, find the power factor at the source.

11.86 A balanced three-phase source supplies power to three loads:

Load 1: 30 kVA at 0.8 pf lagging

Load 2: 24 kW at 0.6 pf leading

Load 3: unknown

If the line voltage and total complex power at the load are 208 V rms and $60\underline{/0^\circ}$ kVA, respectively, find the unknown load.

11.87 A balanced three-phase source supplies power to three loads:

Load 1: 24 kW at 0.8 pf lagging

Load 2: 10 kVA at 0.7 pf leading

Load 3: unknown

If the line voltage at the load is 208 V rms, the magnitude of the total complex power is 41.93 kVA, and the combined power factor at the load is 0.86 lagging, find the unknown load.

11.88 Find the value of C in Fig. P11.88 such that the total load has a power factor of 0.87 lagging.

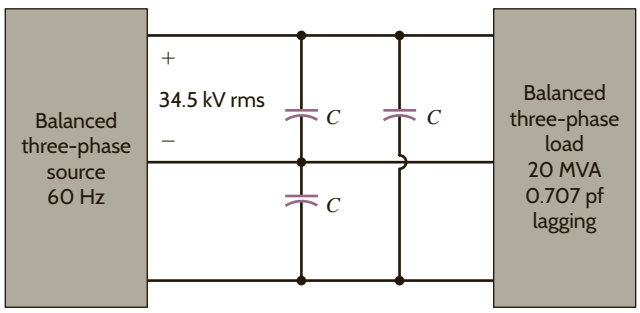

Figure P11.88

11.89 Find C in the network in Fig. P11.89 so that the total load has a power factor of 0.9 leading.

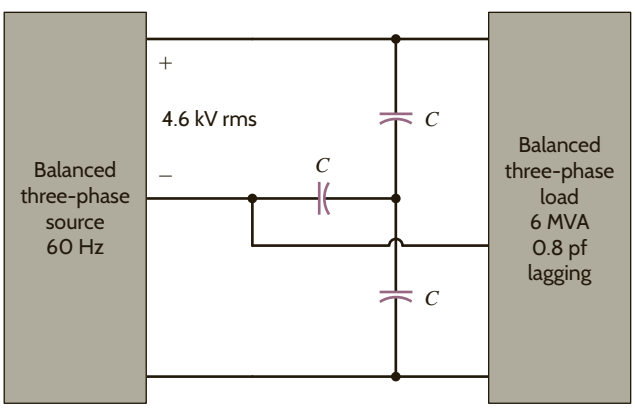

Figure P11.89

11.90 A three-phase *abc*-sequence wye-connected source with $\mathbf{V}_{an} = 220\underline{/0^\circ}$ V rms supplies power to a wye-connected load that consumes 50 kW of power in each phase at a pf of 0.8 lagging. Three capacitors are found that each have an impedance of $-j2.0\ \Omega$, and they are connected in parallel with the load in a wye configuration. Determine the power factor of the combined load as seen by the source.

11.91 If the three capacitors in the network in Problem 11.90 are connected in a delta configuration, determine the power factor of the combined load as seen by the source.

11.92 Find C in the network in Fig. P11.92 such that the total load has a power factor of 0.87 leading.

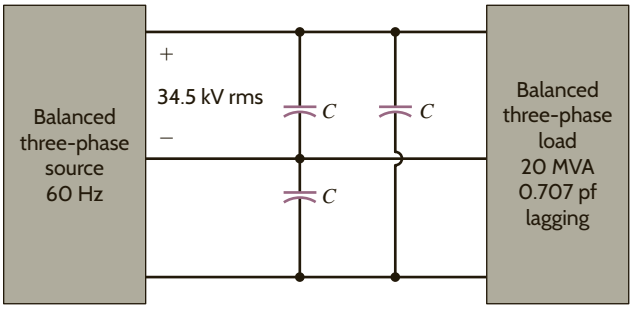

Figure P11.92

11.93 Find C in the network in Fig. P11.93 such that the total load has a power factor of 0.9 lagging.

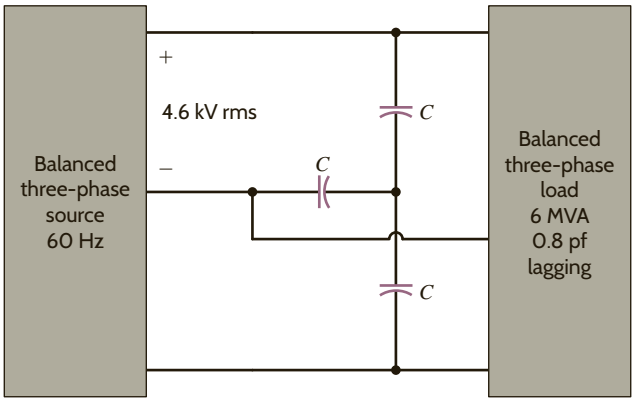

Figure P11.93

11.94 A standard practice for utility companies is to divide customers into single-phase users and three-phase users. The utility must provide three-phase users, typically industries, with all three phases. However, single-phase users, residential and light commercial, are connected to only one phase. To reduce cable costs, all single-phase users in a neighborhood are connected together. This means that even if the three-phase users present perfectly balanced loads to the power grid, the single-phase loads will never be in balance, resulting in current flow in the neutral connection. Consider the 60-Hz, *abc*-sequence network in Fig. P11.94. With a line voltage of $416\angle 30^\circ$ V rms, phase *a* supplies the single-phase users on A Street, phase *b* supplies B Street, and phase *c* supplies C Street. Furthermore, the three-phase industrial load, which is connected in delta, is balanced. Find the neutral current.

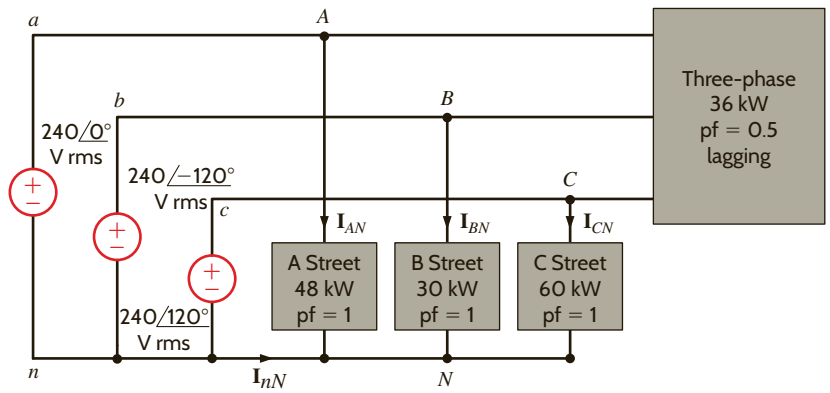

Figure P11.94

TYPICAL PROBLEMS FOUND ON THE FE EXAM

11PFE-1 A wye-connected load consists of a series *RL* impedance. Measurements indicate that the rms voltage across each element is 84.85 V. If the rms line current is 6 A, find the total complex power for the three-phase load configuration.

a. $1.25\angle -45^\circ$ kVA **c.** $3.74\angle 60^\circ$ kVA
b. $4.32\angle 30^\circ$ kVA **d.** $2.16\angle 45^\circ$ kVA

11PFE-2 A balanced three-phase delta-connected load consists of an impedance of $12 + j12\ \Omega$. If the line voltage at the load is measured to be 230 V rms, find the total real power absorbed by the three-phase configuration.

a. 6.62 kW **c.** 3.36 kW
b. 2.42 kW **d.** 5.82 kW

11PFE-3 Two balanced three-phase loads are connected in parallel. One load with a phase impedance of $24 + j18\ \Omega$ is connected in delta, and the other load has a phase impedance of $6 + j4\ \Omega$ and is connected in wye. If the line-to-line voltage is 208 V rms, determine the line current.

a. $15.84\angle -60.25^\circ$ A rms **c.** $40.49\angle 30.27^\circ$ A rms
b. $28.63\angle -35.02^\circ$ A rms **d.** $35.32\angle 90.53^\circ$ A rms

11PFE-4 The total complex power at the load of a three-phase balanced system is $24\angle 30^\circ$ kVA. Find the real power per phase.

a. 3.24 kW **c.** 6.93 kW
b. 4.01 kW **d.** 8.25 kW

11PFE-5 A balanced three-phase load operates at 90 kW with a line voltage at the load of $480\angle 0^\circ$ V rms at 60 Hz. The apparent power of the three-phase load is 100 kVA. It is known that the load has a lagging power factor. What is the total three-phase reactive power of the load?

a. 22.43 kvar **c.** 25.35 kvar
b. 30.51 kvar **d.** 43.59 kvar

Chapter Twelve

THE LEARNING GOALS FOR THIS CHAPTER ARE THAT STUDENTS SHOULD BE ABLE TO:

- Calculate the performance at any frequency of our basic circuit elements: R, L, and C.
- Describe the different types of network functions and the definition of poles and zeros.
- Sketch the Bode plot for a network function after calculating the voltages, powers, and currents in the network.
- Use MATLAB to create the Bode plot for a network.
- Analyze series and parallel resonant circuits to determine the voltages and currents in the circuits.
- Explain the concepts of magnitude and frequency scaling.
- Identify the –3dB points of basic filters such as low-pass, high-pass, band-pass, and band rejection.
- Analyze basic and active filters to find voltages and currents in these circuits.

VARIABLE-FREQUENCY NETWORK PERFORMANCE

EXPERIMENTS THAT HELP STUDENTS DEVELOP AN UNDERSTANDING OF VARIABLE-FREQUENCY CIRCUITS ARE:

- Passive Filters: Generate Bode plots for a high-pass filter and a band-pass filter analytically, using MATLAB, PSpice simulations, and the option on most oscilloscopes.
- Passive Notch and Band-pass Filters: Investigate the impact of real components on the center frequency and Q factor of both notch and band-pass filters experimentally after analyzing and simulating ideal versions of these filters.
- Sweeping Passive Filter: Characterize two simple passive filters using a spectrum analyzer and compare the results to PSpice simulations.

BY APPLYING THEIR KNOWLEDGE OF VARIABLE-FREQUENCY CIRCUITS, STUDENTS CAN DESIGN:

- Audio mixer with speaker to combine three signals with different frequencies with differing gains at each frequency.
- A vocals equalizer that separates an input signal into various-frequency bands so that the signal associated with a human voice can be amplified.

12.1 Variable Frequency-Response Analysis

In previous chapters we investigated the response of *RLC* networks to sinusoidal inputs. In particular, we considered 60-Hz sinusoidal inputs. In this chapter we allow the frequency of excitation to become a variable and evaluate network performance as a function of frequency. To begin, let us consider the effect of varying frequency on elements with which we are already quite familiar—the resistor, inductor, and capacitor. The frequency-domain impedance of the resistor shown in **Fig. 12.1a** is

$$\mathbf{Z}_R = R = R\underline{/0^\circ}$$

The magnitude and phase are constant and independent of frequency. Sketches of the magnitude and phase of $\mathbf{Z}_R$ are shown in **Figs. 12.1b** and **c**. Obviously, this is a very simple situation.

For the inductor in **Fig. 12.2a**, the frequency-domain impedance $\mathbf{Z}_L$ is

$$\mathbf{Z}_L = j\omega L = \omega L\underline{/90^\circ}$$

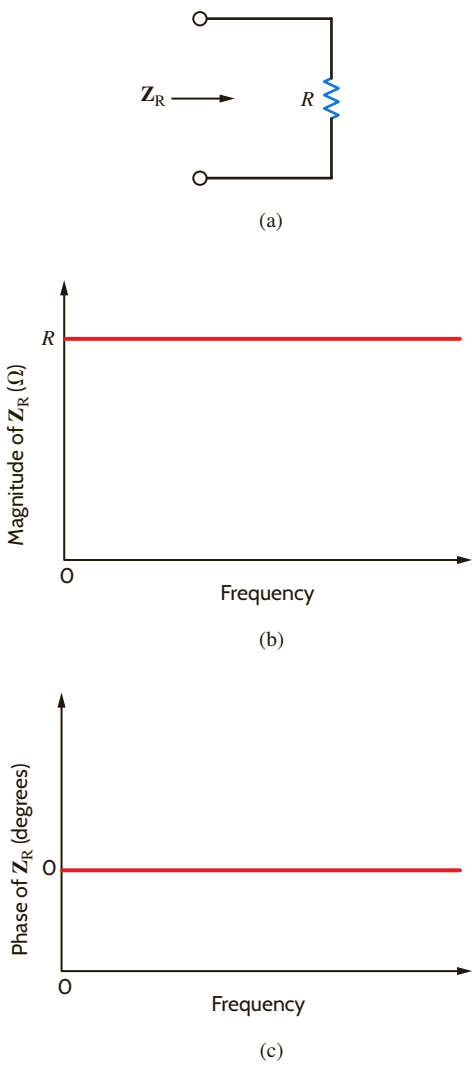

Figure 12.1
Frequency-independent impedance of a resistor.

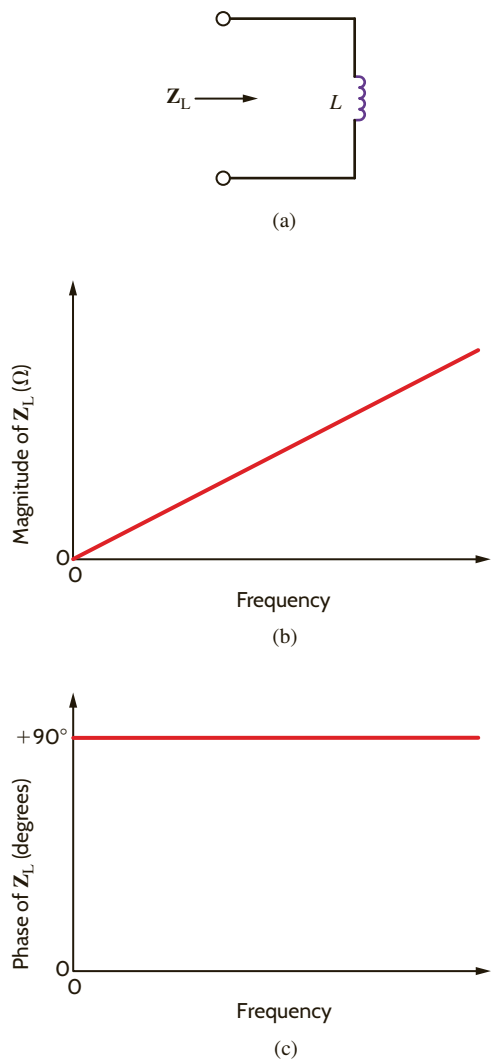

Figure 12.2
Frequency-dependent impedance of an inductor.

Figure 12.3

Frequency-dependent impedance of a capacitor.

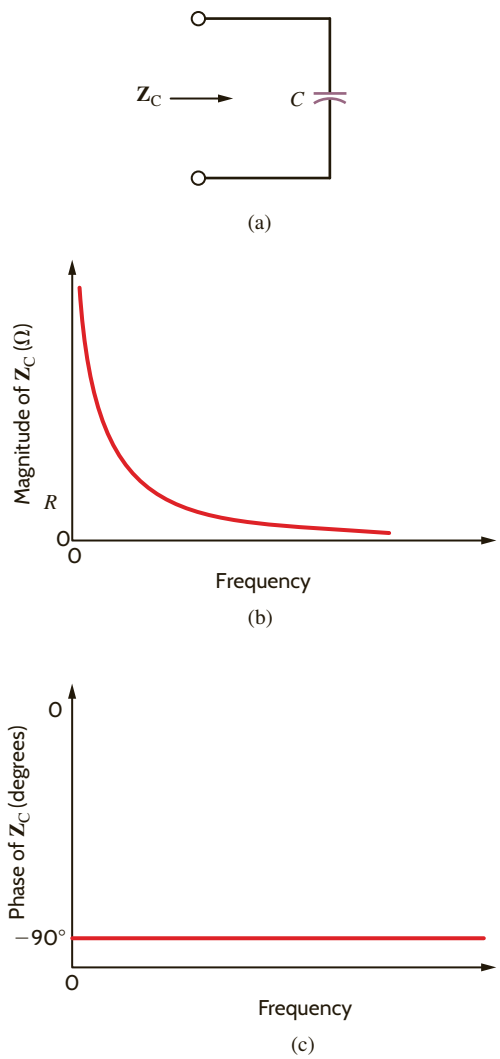

The phase is constant at 90°, but the magnitude of $\mathbf{Z}_L$ is directly proportional to frequency. **Figs. 12.2b** and **c** show sketches of the magnitude and phase of $\mathbf{Z}_L$ versus frequency. Note that at low frequencies the inductor's impedance is quite small. In fact, at dc, $\mathbf{Z}_L$ is zero, and the inductor appears as a short circuit. Conversely, as frequency increases, the impedance also increases.

Next consider the capacitor of **Fig. 12.3a**. The impedance is

$$\mathbf{Z}_C = \frac{1}{j\omega C} = \frac{1}{\omega C}\underline{/-90^\circ}$$

Once again the phase of the impedance is constant, but now the magnitude is inversely proportional to frequency, as shown in **Figs. 12.3b** and **c**. Note that the impedance approaches infinity, or an open circuit, as ω approaches zero and $\mathbf{Z}_C$ approaches zero as ω approaches infinity.

Now let us investigate a more complex circuit: the *RLC* series network in **Fig. 12.4a**. The equivalent impedance is

$$\mathbf{Z}_{eq} = R + j\omega L + \frac{1}{j\omega C}$$

or

$$\mathbf{Z}_{eq} = \frac{(j\omega)^2 LC + j\omega RC + 1}{j\omega C}$$

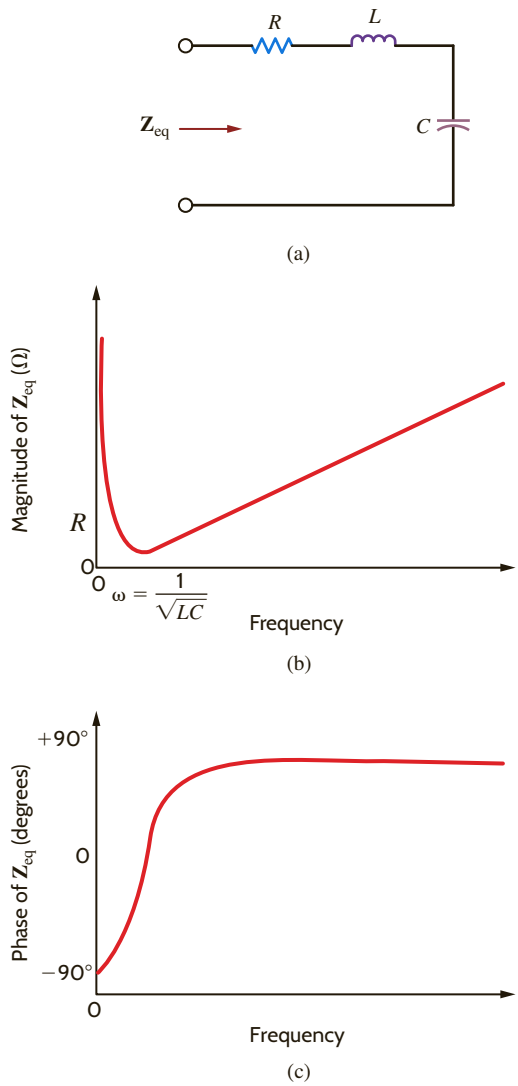

Figure 12.4
Frequency-dependent impedance of an *RLC* series network.

Sketches of the magnitude and phase of this function are shown in **Figs. 12.4b** and **c**.

Note that at very low frequencies, the capacitor appears as an open circuit and, therefore, the impedance is very large in this range. At high frequencies, the capacitor has very little effect and the impedance is dominated by the inductor, whose impedance keeps rising with frequency.

As the circuits become more complicated, the equations become more cumbersome. In an attempt to simplify them, let us make the substitution $j\omega = s$. (This substitution has a more important meaning, which we will describe in later chapters.) With this substitution, the expression for $\mathbf{Z}_{eq}$ becomes

$$\mathbf{Z}_{eq} = \frac{s^2LC + sRC + 1}{sC}$$

If we review the four circuits we investigated thus far, we will find that in every case the impedance is the ratio of two polynomials in s and is of the general form

$$\mathbf{Z}(s) = \frac{N(s)}{D(s)} = \frac{a_m s^m + a_{m-1}s^{m-1} + \cdots + a_1 s + a_0}{b_n s^n + b_{n-1}s^{n-1} + \cdots + b_1 s + b_0} \qquad \textbf{12.1}$$

where $N(s)$ and $D(s)$ are polynomials of order m and n, respectively. An extremely important aspect of Eq. (12.1) is that it holds not only for impedances but also for all voltages, currents, admittances, and gains in the network. The only restriction is that the values of all circuit elements (resistors, capacitors, inductors, and dependent sources) must be real numbers.

Let us now demonstrate the manner in which the voltage across an element in a series *RLC* network varies with frequency.

EXAMPLE 12.1

Consider the network in Fig. 12.5a. We wish to determine the variation of the output voltage as a function of frequency over the range from 0 to 1 kHz.

SOLUTION

Using voltage division, we can express the output as

$$\mathbf{V}_o = \left(\frac{R}{R + j\omega L + \dfrac{1}{j\omega C}}\right)\mathbf{V}_S$$

or, equivalently,

$$\mathbf{V}_o = \left(\frac{j\omega CR}{(j\omega)^2 LC + j\omega CR + 1}\right)\mathbf{V}_S$$

Using the element values, we find that the equation becomes

$$\mathbf{V}_o = \left(\frac{(j\omega)(37.95 \times 10^{-3})}{(j\omega)^2(2.53 \times 10^{-4}) + j\omega(37.95 \times 10^{-3}) + 1}\right)10\underline{/0^\circ}$$

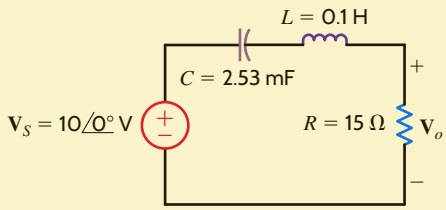

(a)

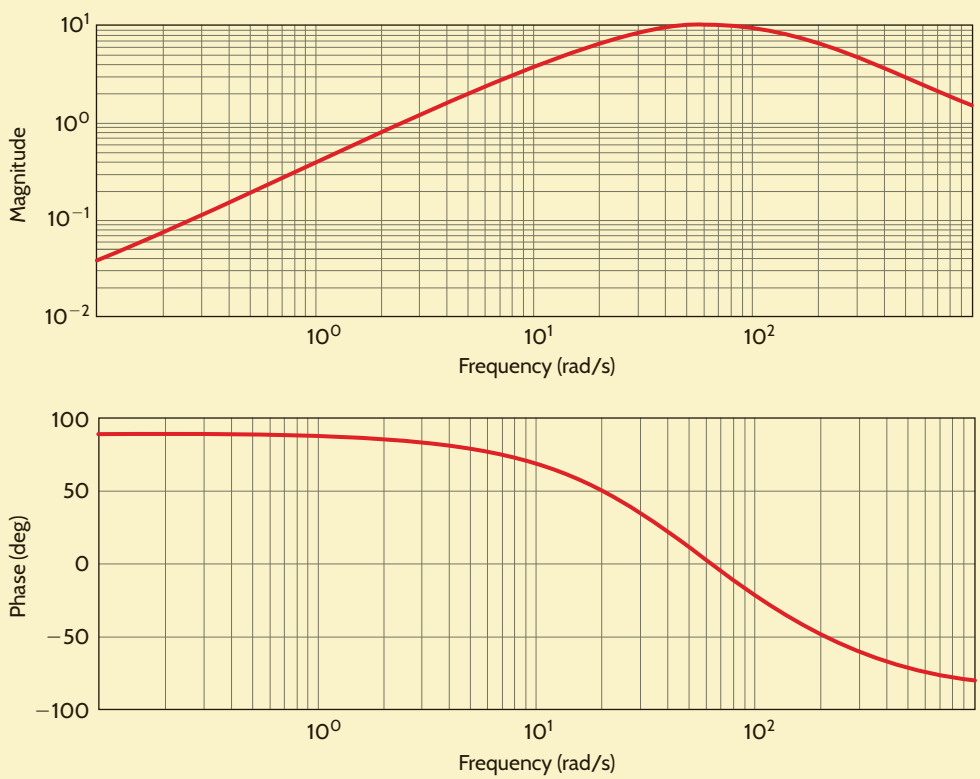

(b)

Figure 12.5
(a) Network and (b) its frequency-response simulation.

The resultant magnitude and phase characteristics are semilog plots in which the frequency is displayed on the log axis. The plots for the function $\mathbf{V}_o$ are shown in Fig. 12.5b.

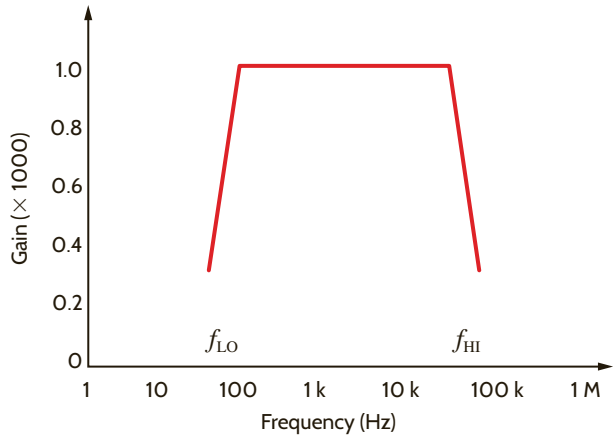

Figure 12.6
Amplifier frequency-response requirements.

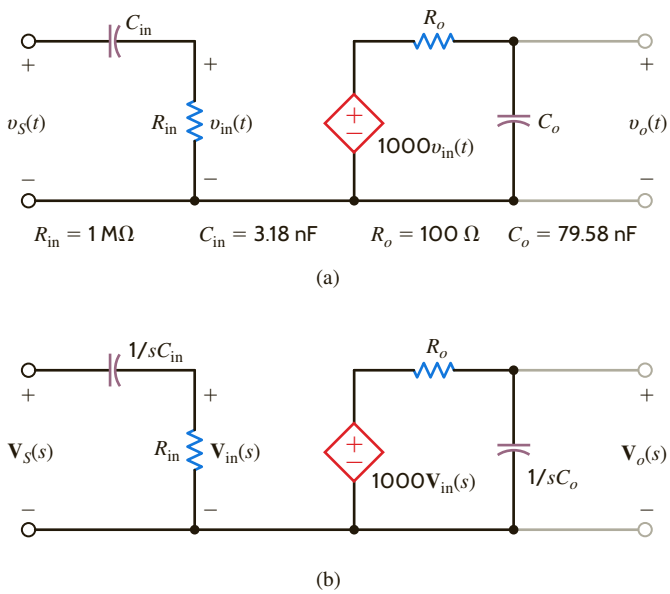

Figure 12.7
Amplifier equivalent network.

In subsequent sections we will illustrate that the use of a semilog plot is a very useful tool in deriving frequency-response information.

As an introductory application of variable frequency-response analysis and characterization, let us consider a stereo amplifier. In particular, we should consider first the frequency range over which the amplifier must perform and then exactly what kind of performance we desire. The frequency range of the amplifier must exceed that of the human ear, which is roughly 50 Hz to 15,000 Hz. Accordingly, typical stereo amplifiers are designed to operate in the frequency range from 50 Hz to 20,000 Hz. Furthermore, we want to preserve the fidelity of the signal as it passes through the amplifier. Thus, the output signal should be an exact duplicate of the input signal times a gain factor. This requires that the gain be independent of frequency over the specified frequency range of 50 Hz to 20,000 Hz. An ideal sketch of this requirement for a gain of 1000 is shown in **Fig. 12.6**, where the midband region is defined as that portion of the plot where the gain is constant and is bounded by two points, which we will refer to as f_{LO} and f_{HI}. Notice once again that the frequency axis is a log axis and, thus, the frequency response is displayed on a semilog plot.

A model for the amplifier described graphically in Fig. 12.6 is shown in **Fig. 12.7a**, with the frequency-domain equivalent circuit in **Fig. 12.7b**.

If the input is a steady-state sinusoid, we can use frequency-domain analysis to find the gain

$$\mathbf{G}_v(j\omega) = \frac{\mathbf{V}_o(j\omega)}{\mathbf{V}_S(j\omega)}$$

Figure 12.8

Exact and approximate amplifier gain versus frequency plots.

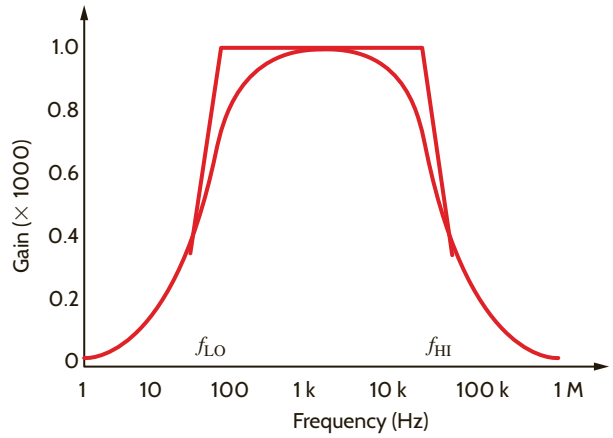

which with the substitution $s = j\omega$ can be expressed as

$$\mathbf{G}_v(s) = \frac{\mathbf{V}_o(s)}{\mathbf{V}_S(s)}$$

Using voltage division, we find that the gain is

$$\mathbf{G}_v(s) = \frac{\mathbf{V}_o(s)}{\mathbf{V}_S(s)} = \frac{\mathbf{V}_{in}(s)}{\mathbf{V}_S(s)}\frac{\mathbf{V}_o(s)}{\mathbf{V}_{in}(s)} = \left[\frac{R_{in}}{R_{in} + 1/sC_{in}}\right](1000)\left[\frac{1/sC_o}{R_o + 1/sC_o}\right]$$

or

$$\mathbf{G}_v(s) = \left[\frac{sC_{in}R_{in}}{1 + sC_{in}R_{in}}\right](1000)\left[\frac{1}{1 + sC_oR_o}\right]$$

Using the element values in Fig. 12.7a,

$$\mathbf{G}_v(s) = \left[\frac{s}{s + 100\pi}\right](1000)\left[\frac{40{,}000\pi}{s + 40{,}000\pi}\right]$$

where 100π and $40{,}000\pi$ are the radian equivalents of 50 Hz and 20,000 Hz, respectively. Since $s = j\omega$, the network function is indeed complex. An exact plot of $\mathbf{G}_v(s)$ is shown in **Fig. 12.8** superimposed over the sketch of Fig. 12.6. The exact plot exhibits smooth transitions at f_{LO} and f_{HI}; otherwise the plots match fairly well.

Let us examine our expression for $\mathbf{G}_v(s)$ more closely with respect to the plot in Fig. 12.8. Assume that f is well within the midband frequency range; that is,

$$f_{LO} \ll f \ll f_{HI}$$

or

$$100\pi \ll |s| \ll 40{,}000\pi$$

Under these conditions, the network function becomes

$$\mathbf{G}_v(s) \approx \left[\frac{s}{s}\right](1000)\left[\frac{1}{1 + 0}\right]$$

or

$$\mathbf{G}_v(s) = 1000$$

Thus, well within midband, the gain is constant. However, if the frequency of excitation decreases toward f_{LO}, then $|s|$ is comparable to 100π and

$$\mathbf{G}_v(s) \approx \left[\frac{s}{s + 100\pi}\right](1000)$$

Since $R_{in}C_{in} = 1/100\pi$, we see that C_{in} causes the rolloff in gain at low frequencies. Similarly, when the frequency approaches f_{HI}, the gain rolloff is due to C_o.

TABLE 12.1 Network transfer functions

INPUT	OUTPUT	TRANSFER FUNCTION	SYMBOL
Voltage	Voltage	Voltage gain	$\mathbf{G}_v(s)$
Current	Voltage	Transimpedance	$\mathbf{Z}(s)$
Current	Current	Current gain	$\mathbf{G}_i(s)$
Voltage	Current	Transadmittance	$\mathbf{Y}(s)$

Through this amplifier example, we have introduced the concept of frequency-dependent networks and have demonstrated that frequency-dependent network performance is caused by the reactive elements in a network.

NETWORK FUNCTIONS In the previous section, we introduced the term *voltage gain*, $\mathbf{G}_v(s)$. This term is actually only one of several network functions, designated generally as $\mathbf{H}(s)$, which define the ratio of response to input. Since the function describes a reaction due to an excitation at some other point in the circuit, network functions are also called *transfer functions*. Furthermore, transfer functions are not limited to voltage ratios. Since in electrical networks inputs and outputs can be either voltages or currents, there are four possible network functions, as listed in Table 12.1.

There are also *driving point functions*, which are impedances or admittances defined at a single pair of terminals. For example, the input impedance of a network is a driving point function.

EXAMPLE 12.2

We wish to determine the transfer admittance $[\mathbf{I}_2(s)/\mathbf{V}_1(s)]$ and the voltage gain of the network shown in Fig. 12.9.

SOLUTION

The mesh equations for the network are

$$(R_1 + sL)\mathbf{I}_1(s) - sL\mathbf{I}_2(s) = \mathbf{V}_1(s)$$

$$-sL\mathbf{I}_1(s) + \left(R_2 + sL + \frac{1}{sC}\right)\mathbf{I}_2(s) = 0$$

$$\mathbf{V}_2(s) = \mathbf{I}_2(s)R_2$$

Solving the equations for $\mathbf{I}_2(s)$ yields

$$\mathbf{I}_2(s) = \frac{sL\mathbf{V}_1(s)}{(R_1 + sL)(R_2 + sL + 1/sC) - s^2L^2}$$

Therefore, the transfer admittance $[\mathbf{I}_2(s)/\mathbf{V}_1(s)]$ is

$$\mathbf{Y}_T(s) = \frac{\mathbf{I}_2(s)}{\mathbf{V}_1(s)} = \frac{LCs^2}{(R_1 + R_2)LCs^2 + (L + R_1R_2C)s + R_1}$$

and the voltage gain is

$$\mathbf{G}_v(s) = \frac{\mathbf{V}_2(s)}{\mathbf{V}_1(s)} = \frac{LCR_2s^2}{(R_1 + R_2)LCs^2 + (L + R_1R_2C)s + R_1}$$

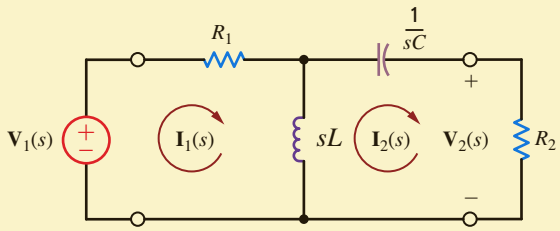

Figure 12.9
Circuit employed in Example 12.2.

POLES AND ZEROS As we have indicated, the network function can be expressed as the ratio of the two polynomials in s. In addition, we note that since the values of our circuit elements, or controlled sources, are real numbers, the coefficients of the two polynomials will be real. Therefore, we will express a network function in the form

$$\mathbf{H}(s) = \frac{N(s)}{D(s)} = \frac{a_m s^m + a_{m-1}s^{m-1} + \cdots + a_1 s + a_0}{b_n s^n + b_{n-1}s^{n-1} + \cdots + b_1 s + b_0} \qquad \textbf{12.2}$$

where $N(s)$ is the numerator polynomial of degree m and $D(s)$ is the denominator polynomial of degree n. Equation (12.2) can also be written in the form

$$\mathbf{H}(s) = \frac{K_0(s - z_1)(s - z_2)\cdots(s - z_m)}{(s - p_1)(s - p_2)\cdots(s - p_n)} \qquad \textbf{12.3}$$

where K_0 is a constant, $z_1, \ldots, z_m$ are the roots of $N(s)$, and $p_1, \ldots, p_n$ are the roots of $D(s)$. Note that if $s = z_1$, or $z_2, \ldots, z_m$, then $\mathbf{H}(s)$ becomes zero and hence $z_1, \ldots, z_m$ are called zeros of the transfer function. Similarly, if $s = p_1$, or $p_2, \cdots, p_n$, then $\mathbf{H}(s)$ becomes infinite and, therefore, $p_1, \ldots, p_n$ are called poles of the function. The zeros or poles may actually be complex. However, if they are complex, they must occur in conjugate pairs since the coefficients of the polynomial are real. The representation of the network function specified in Eq. (12.3) is extremely important and is generally employed to represent any linear time-invariant system. The importance of this form lies in the fact that the dynamic properties of a system can be gleaned from an examination of the system poles.

LEARNING ASSESSMENTS

E12.1 Find the driving-point impedance at $\mathbf{V}_S(s)$ in the amplifier shown in Fig. 12.7b.

ANSWER:

$$\mathbf{Z}(s) = R_{\text{in}} + \frac{1}{sC_{\text{in}}} = \left[1 + \left(\frac{100\pi}{s}\right)\right] \text{M}\Omega.$$

E12.2 Find the pole and zero locations in hertz and the value of K_0 for the amplifier network in Fig. 12.7.

ANSWER:

$z_1 = 0$ Hz (dc);
$p_1 = -50$ Hz;
$p_2 = -20{,}000$ Hz;
$K_0 = (4 \times 10^7)\pi$.

E12.3 Determine the voltage transfer function $\mathbf{V}_o(s)/\mathbf{V}_i(s)$ as a function of s in Fig. E12.3.

ANSWER:

$$\frac{s}{R_1C_2\left[s^2 + \dfrac{C_1R_2 + C_2R_2 + C_1R_1}{R_1R_2C_1C_2}s + \dfrac{1}{R_1R_2C_1C_2}\right]}$$

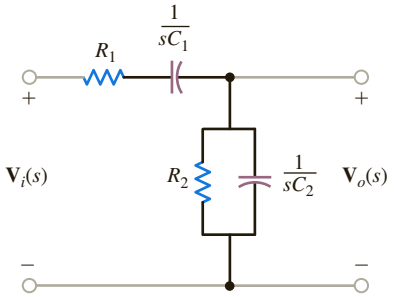

Figure E12.3

12.2 Sinusoidal Frequency Analysis

Although in specific cases a network operates at only one frequency (e.g., a power system network), in general we are interested in the behavior of a network as a function of frequency. In a sinusoidal steady-state analysis, the network function can be expressed as

$$\mathbf{H}(j\omega) = M(\omega)e^{j\phi(\omega)} \tag{12.4}$$

where $M(\omega) = |\mathbf{H}(j\omega)|$ and $\phi(\omega)$ is the phase. A plot of these two functions, which are commonly called the *magnitude* and *phase characteristics*, displays the manner in which the response varies with the input frequency ω. We will now illustrate the manner in which to perform a frequency-domain analysis by simply evaluating the function at various frequencies within the range of interest.

FREQUENCY RESPONSE USING A BODE PLOT If the network characteristics are plotted on a semilog scale (that is, a linear scale for the ordinate and a logarithmic scale for the abscissa), they are known as *Bode plots* (named after Hendrik W. Bode). This graph is a powerful tool in both the analysis and design of frequency-dependent systems and networks such as filters, tuners, and amplifiers. In using the graph, we plot $20 \log_{10} M(\omega)$ versus $\log_{10}(\omega)$ instead of $M(\omega)$ versus ω. The advantage of this technique is that rather than plotting the characteristic point by point, we can employ straight-line approximations to obtain the characteristic very efficiently. The ordinate for the magnitude plot is the decibel (dB). This unit was originally employed to measure the ratio of powers; that is,

$$\text{number of dB} = 10 \log_{10} \frac{P_2}{P_1} \tag{12.5}$$

If the powers are absorbed by two equal resistors, then

$$\begin{aligned}\text{number of dB} &= 10 \log_{10} \frac{|\mathbf{V}_2|^2/R}{|\mathbf{V}_1|^2/R} = 10 \log_{10} \frac{|\mathbf{I}_2|^2 R}{|\mathbf{I}_1|^2 R} \\ &= 20 \log_{10} \frac{|\mathbf{V}_2|}{|\mathbf{V}_1|} = 20 \log_{10} \frac{|\mathbf{I}_2|}{|\mathbf{I}_1|}\end{aligned} \tag{12.6}$$

The term dB has become so popular that it is now used for voltage and current ratios, as illustrated in Eq. (12.6), without regard to the impedance employed in each case.

In the sinusoidal steady-state case, $\mathbf{H}(j\omega)$ in Eq. (12.3) can be expressed in general as

$$\mathbf{H}(j\omega) = \frac{K_0(j\omega)^{\pm N}(1 + j\omega\tau_1)[1 + 2\zeta_3(j\omega\tau_3) + (j\omega\tau_3)^2]\cdots}{(1 + j\omega\tau_a)[1 + 2\zeta_b(j\omega\tau_b) + (j\omega\tau_b)^2]\cdots} \tag{12.7}$$

Note that this equation contains the following typical factors:

1. A frequency-independent factor $K_0 > 0$
2. Poles or zeros at the origin of the form $j\omega$; that is, $(j\omega)^{+N}$ for zeros and $(j\omega)^{-N}$ for poles
3. Poles or zeros of the form $(1 + j\omega\tau)$
4. Quadratic poles or zeros of the form $1 + 2\zeta(j\omega\tau) + (j\omega\tau)^2$

Taking the logarithm of the magnitude of the function $\mathbf{H}(j\omega)$ in Eq. (12.7) yields

$$\begin{aligned}20 \log_{10}|\mathbf{H}(j\omega)| = {} & 20 \log_{10} K_0 \pm 20N \log_{10} |j\omega| \\ & + 20 \log_{10} |1 + j\omega\tau_1| \\ & + 20 \log_{10} |1 + 2\zeta_3(j\omega\tau_3) + (j\omega\tau_3)^2| \\ & + \cdots - 20 \log_{10}|1 + j\omega\tau_a| \\ & - 20 \log_{10} |1 + 2\zeta_b(j\omega\tau_b) + (j\omega\tau_b)^2| \cdots\end{aligned} \tag{12.8}$$

Note that we have used the fact that the log of the product of two or more terms is equal to the sum of the logs of the individual terms, the log of the quotient of two terms is equal to the difference of the logs of the individual terms, and $\log_{10} A^n = n \log_{10} A$.

The phase angle for $\mathbf{H}(j\omega)$ is

$$\underline{/\mathbf{H}(j\omega)} = 0 \pm N(90°) + \tan^{-1}\omega\tau_1 + \tan^{-1}\left(\frac{2\zeta_3\omega\tau_3}{1-\omega^2\tau_3^2}\right) + \cdots - \tan^{-1}\omega\tau_a - \tan^{-1}\left(\frac{2\zeta_b\omega\tau_b}{1-\omega^2\tau_b^2}\right)\cdots \qquad \textbf{12.9}$$

As Eqs. (12.8) and (12.9) indicate, we will simply plot each factor individually on a common graph and then sum them algebraically to obtain the total characteristic. Let us examine some of the individual terms and illustrate an efficient manner in which to plot them on the Bode diagram.

CONSTANT TERM The term $20\log_{10}K_0$ represents a constant magnitude with zero phase shift, as shown in **Fig. 12.10a**.

POLES OR ZEROS AT THE ORIGIN Poles or zeros at the origin are of the form $(j\omega)^{\pm N}$, where + is used for a zero and—is used for a pole. The magnitude of this function is $\pm 20N\log_{10}\omega$, which is a straight line on semilog paper with a slope of $\pm 20N$ dB/decade; that is, the value will change by $20N$ each time the frequency is multiplied by 10, and the phase of this function is a constant $\pm N(90°)$. The magnitude and phase characteristics for poles and zeros at the origin are shown in **Figs. 12.10b** and **c**, respectively.

SIMPLE POLE OR ZERO Linear approximations can be employed when a simple pole or zero of the form $(1 + j\omega\tau)$ is present in the network function. For $\omega\tau \ll 1$, $(1 + j\omega\tau) \approx 1$ and, therefore, $20\log_{10}|(1 + j\omega\tau)| = 20\log_{10} 1 = 0$ dB. Similarly, if $\omega\tau \gg 1$, then $(1 + j\omega\tau) \approx j\omega\tau$,

Figure 12.10
Magnitude and phase characteristics for a constant term and poles and zeros at the origin.

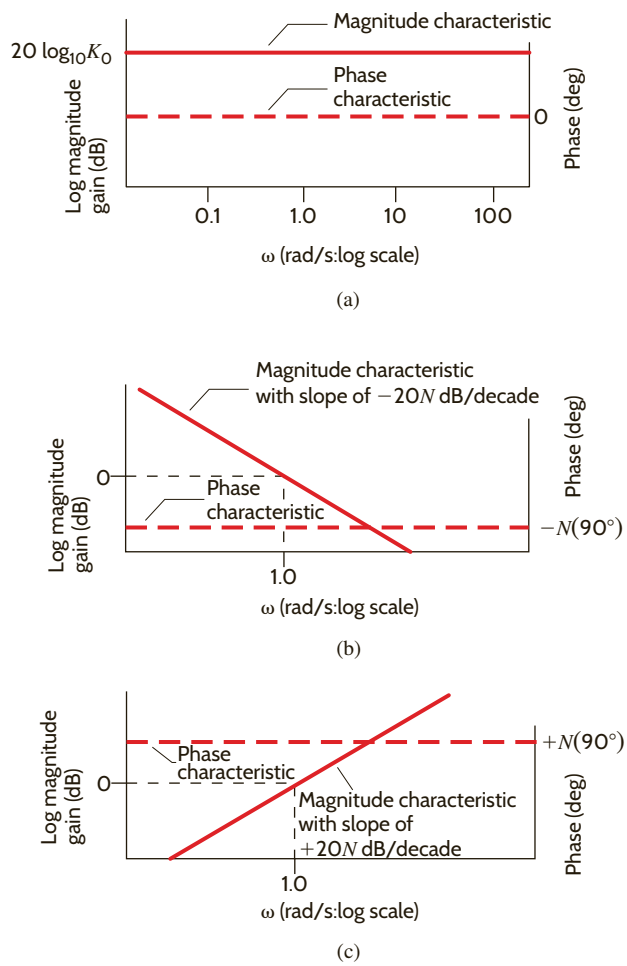

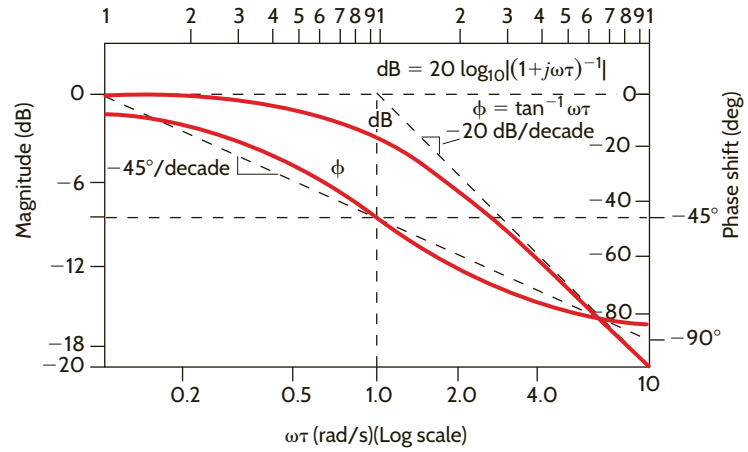

(a)

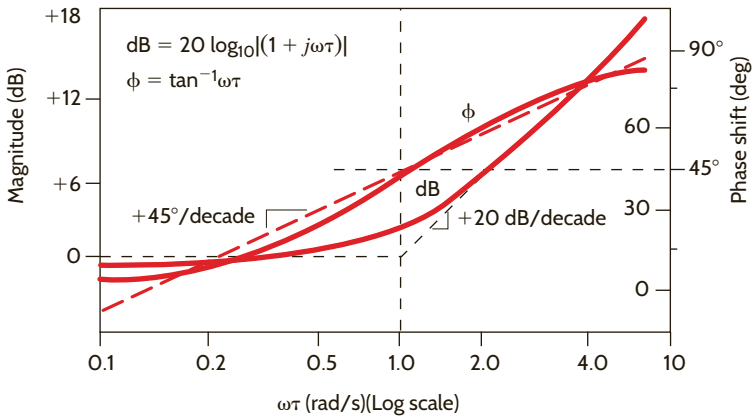

(b)

Figure 12.11
Magnitude and phase plot (a) for a simple pole and (b) for a simple zero.

and hence $20 \log_{10}|(1 + j\omega\tau)| \approx 20 \log_{10}\omega\tau$. Therefore, for $\omega\tau \ll 1$ the response is 0 dB and for $\omega\tau \gg 1$ the response has a slope that is the same as that of a simple pole or zero at the origin. The intersection of these two asymptotes, one for $\omega\tau \ll 1$ and one for $\omega\tau \gg 1$, is the point where $\omega\tau = 1$ or $\omega = 1/\tau$, which is called the *break frequency*. At this break frequency, where $\omega = 1/\tau$, $20 \log_{10}|(1 + j1)| = 20 \log_{10}(2)^{1/2} = 3$ dB. Therefore, the actual curve deviates from the asymptotes by 3 dB at the break frequency. It can be shown that at one-half and twice the break frequency, the deviations are 1 dB. The phase angle associated with a simple pole or zero is $\phi = \tan^{-1} \omega\tau$, which is a simple arctangent curve. Therefore, the phase shift is 45° at the break frequency and 26.6° and 63.4° at one-half and twice the break frequency, respectively. The actual magnitude curve for a pole of this form is shown in **Fig. 12.11a**. For a zero the magnitude curve and the asymptote for $\omega\tau \gg 1$ have a positive slope, and the phase curve extends from 0° to +90°, as shown in **Fig. 12.11b**. If multiple poles or zeros of the form $(1 + j\omega\tau)^N$ are present, then the slope of the high-frequency asymptote is multiplied by N, the deviation between the actual curve and the asymptote at the break frequency is $3N$ dB, and the phase curve extends from 0 to $N(90°)$ and is $N(45°)$ at the break frequency.

QUADRATIC POLES OR ZEROS Quadratic poles or zeros are of the form $1 + 2\zeta\,(j\omega\tau) + (j\omega\tau)^2$. This term is a function not only of ω but also of the dimensionless term ζ, which is called the *damping ratio*. If $\zeta > 1$ or $\zeta = 1$, the roots are real and unequal or real and equal, respectively, and these two cases have already been addressed. If $\zeta < 1$, the roots are complex conjugates, and it is this case that we will examine now. Following the preceding argument for a simple pole or zero, the log magnitude of the quadratic factor is 0 dB for $\omega\tau \ll 1$. For $\omega\tau \gg 1$,

$$20 \log_{10}|1 - (\omega\tau)^2 + 2j\zeta(\omega\tau)| \approx 20 \log_{10}|(\omega\tau)^2| = 40 \log_{10}|\omega\tau|$$

Figure 12.12

Magnitude and phase characteristics for quadratic poles.

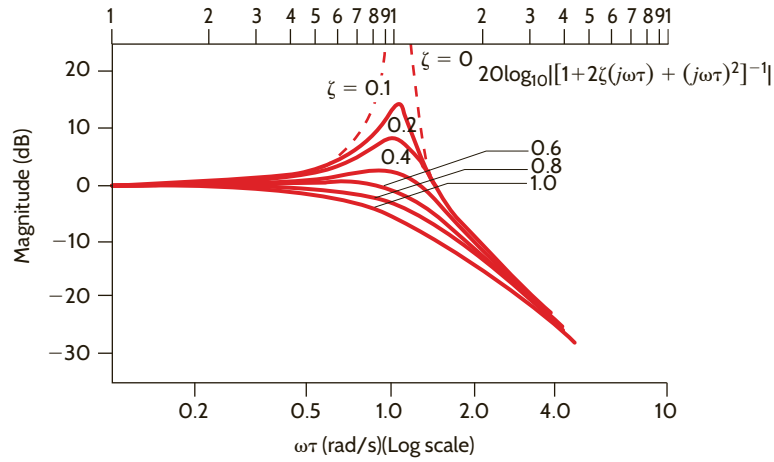

(a)

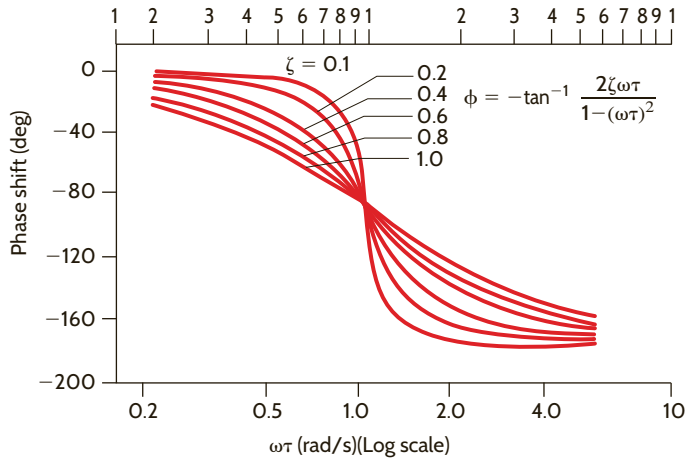

(b)

and therefore, for $\omega\tau \gg 1$, the slope of the log magnitude curve is +40 dB/decade for a quadratic zero and −40 dB/decade for a quadratic pole. Between the two extremes, $\omega\tau \ll 1$ and $\omega\tau \gg 1$, the behavior of the function is dependent on the damping ratio ζ. **Fig. 12.12a** illustrates the manner in which the log magnitude curve for a quadratic *pole* changes as a function of the damping ratio. The phase shift for the quadratic factor is $\tan^{-1}2\zeta\omega\tau/[1-(\omega\tau)^2]$. The phase plot for quadratic *poles* is shown in **Fig. 12.12b**. Note that in this case the phase changes from 0° at frequencies for which $\omega\tau \ll 1$ to −180° at frequencies for which $\omega\tau \gg 1$. For quadratic zeros the magnitude and phase curves are inverted; that is, the log magnitude curve has a slope of +40 dB/decade for $\omega\tau \gg 1$, and the phase curve is 0° for $\omega\tau \ll 1$ and +180° for $\omega\tau \gg 1$.

EXAMPLE 12.3

We want to generate the magnitude and phase plots for the transfer function

$$\mathbf{G}_v(j\omega) = \frac{10(0.1j\omega + 1)}{(j\omega + 1)(0.02j\omega + 1)}$$

SOLUTION

Note that this function is in standard form, since every term is of the form $(j\omega\tau + 1)$. To determine the composite magnitude and phase characteristics, we will plot the individual asymptotic terms and then add them as specified in Eqs. (12.8) and (12.9). Let us consider the magnitude plot first. Since $K_0 = 10$, $20 \log_{10} 10 = 20$ dB, which is a constant independent of frequency, as shown in **Fig. 12.13a**. The zero of the transfer function contributes a term of the form $+20 \log_{10} |1 + 0.1j\omega|$, which is 0 dB for $0.1\omega \ll 1$, has a slope of +20 dB/decade

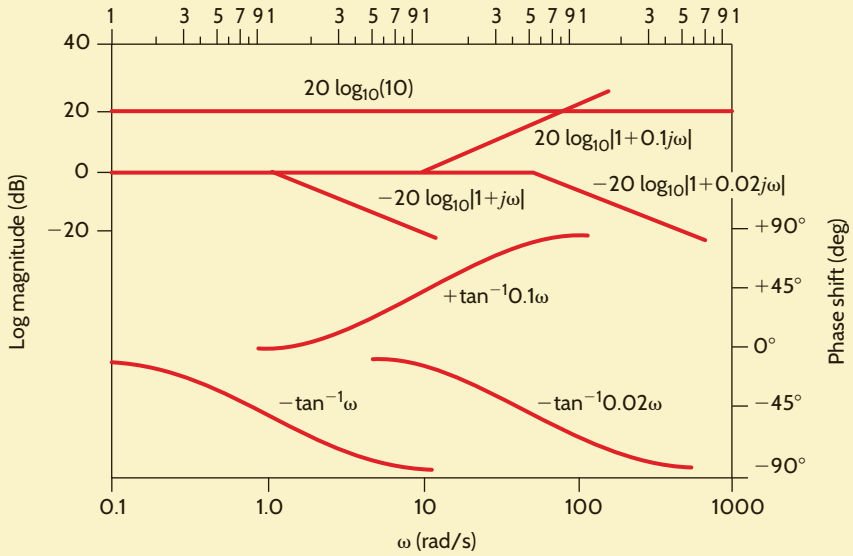

(a)

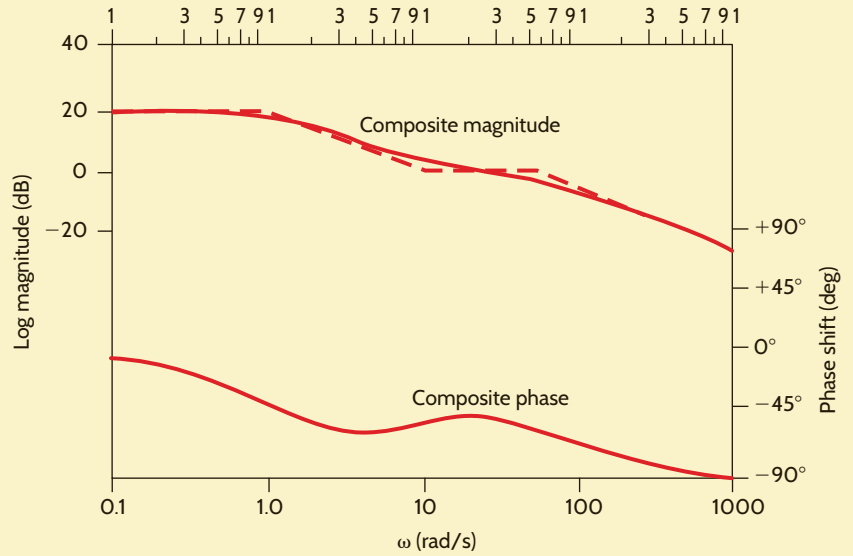

(b)

Figure 12.13

(a) Magnitude and phase components for the poles and zeros of the transfer function in Example 12.3; (b) Bode plot for the transfer function in Example 12.3.

for $0.1\omega \gg 1$, and has a break frequency at $\omega = 10$ rad/s. The poles have break frequencies at $\omega = 1$ and $\omega = 50$ rad/s. The pole with a break frequency at $\omega = 1$ rad/s contributes a term of the form $-20 \log_{10}|1 + j\omega|$, which is 0 dB for $\omega \ll 1$ and has a slope of -20 dB/decade for $\omega \gg 1$. A similar argument can be made for the pole that has a break frequency at $\omega = 50$ rad/s. These factors are all plotted individually in Fig. 12.13a.

Consider now the individual phase curves. The term K_0 is not a function of ω and does not contribute to the phase of the transfer function. The phase curve for the zero is $+\tan^{-1}0.1\omega$, which is an arctangent curve that extends from 0° for $0.1\omega \ll 1$ to +90° for $0.1\omega \gg 1$ and has a phase of +45° at the break frequency. The phase curves for the two poles are $-\tan^{-1}\omega$ and $-\tan^{-1}0.02\omega$. The term $-\tan^{-1}\omega$ is 0° for $\omega \ll 1$, −90° for $\omega \gg 1$, and −45° at the break frequency $\omega = 1$ rad/s. The phase curve for the remaining pole is plotted in a similar fashion. All the individual phase curves are shown in Fig. 12.13a.

As specified in Eqs. (12.8) and (12.9), the composite magnitude and phase of the transfer function are obtained simply by adding the individual terms. The composite curves are plotted in **Fig. 12.13b**. Note that the actual magnitude curve (solid line) differs from the straight-line approximation (dashed line) by 3 dB at the break frequencies and 1 dB at one-half and twice the break frequencies.

EXAMPLE 12.4

Let us draw the Bode plot for the following transfer function:

$$\mathbf{G}_v(j\omega) = \frac{25(j\omega + 1)}{(j\omega)^2(0.1j\omega + 1)}$$

SOLUTION

Once again all the individual terms for both magnitude and phase are plotted in **Fig. 12.14a**. The straight line with a slope of −40 dB/decade is generated by the double pole at the origin. This line is a plot of $-40 \log_{10} \omega$ versus ω and therefore passes through 0 dB at $\omega = 1$ rad/s. The phase for the double pole is a constant −180° for all frequencies. The remainder of the terms are plotted as illustrated in Example 12.3.

The composite plots are shown in **Fig. 12.14b**. Once again they are obtained simply by adding the individual terms in Fig. 12.14a. Note that for frequencies for which $\omega \ll 1$, the slope of the magnitude curve is −40 dB/decade. At $\omega = 1$ rad/s, which is the break frequency of the zero, the magnitude curve changes slope to −20 dB/decade. At $\omega = 10$ rad/s, which is the break frequency of the pole, the slope of the magnitude curve changes back to −40 dB/decade.

The composite phase curve starts at −180° due to the double pole at the origin. Since the first break frequency encountered is a zero, the phase curve shifts toward −90°. However, before the composite phase reaches −90°, the pole with break frequency $\omega = 10$ rad/s begins to shift the composite curve back toward −180°.

Figure 12.14

(a) Magnitude and phase components for the poles and zeros of the transfer function in Example 12.4;
(b) Bode plot for the transfer function in Example 12.4.

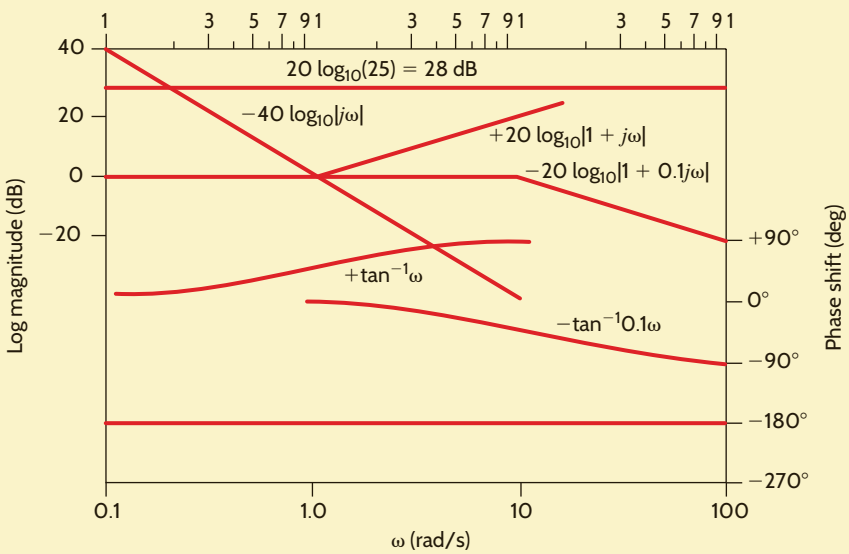

(a)

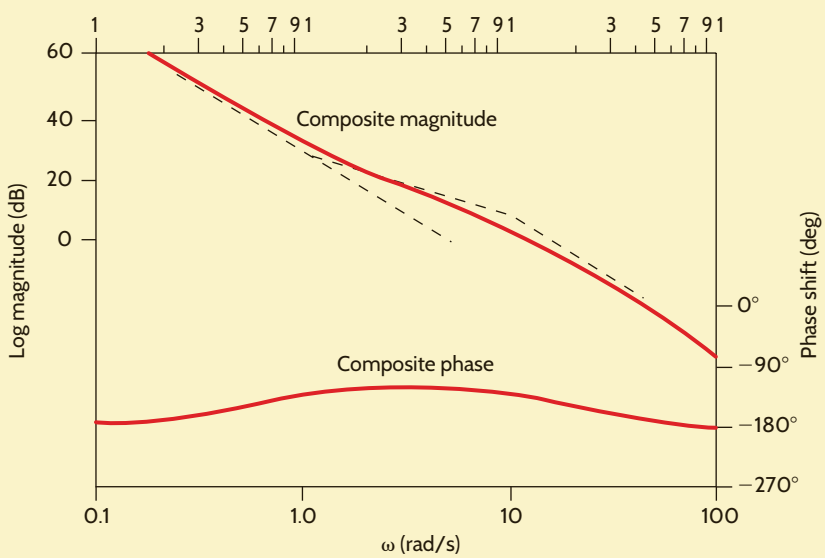

(b)

Example 12.4 illustrates the manner in which to plot directly terms of the form $K_0/(j\omega)^N$. For terms of this form, the initial slope of $-20N$ dB/decade will intersect the 0-dB axis at a frequency of $(K_0)^{1/N}$ rad/s; that is, $-20\log_{10}|K_0/(j\omega)^N| = 0$ dB implies that $K_0/(j\omega)^N = 1$ and, therefore, $\omega = (K_0)^{1/N}$ rad/s. Note that the projected slope of the magnitude curve in Example 12.4 intersects the 0-dB axis at $\omega = (25)^{1/2} = 5$ rad/s.

Similarly, it can be shown that for terms of the form $K_0(j\omega)^N$, the initial slope of $+20N$ dB/decade will intersect the 0-dB axis at a frequency of $\omega = (1/K_0)^{1/N}$ rad/s; that is, $+20\log_{10}|K_0/(j\omega)^N| = 0$ dB implies that $K_0/(j\omega)^N = 1$ and, therefore, $\omega = (1/K_0)^{1/N}$ rad/s.

By applying the concepts we have just demonstrated, we can normally plot the log magnitude characteristic of a transfer function directly in one step.

LEARNING ASSESSMENTS

E12.4 Sketch the magnitude characteristic of the Bode plot, labeling all critical slopes and points for the function

$$\mathbf{G}(j\omega) = \frac{10^4(j\omega + 2)}{(j\omega + 10)(j\omega + 100)}$$

ANSWER:

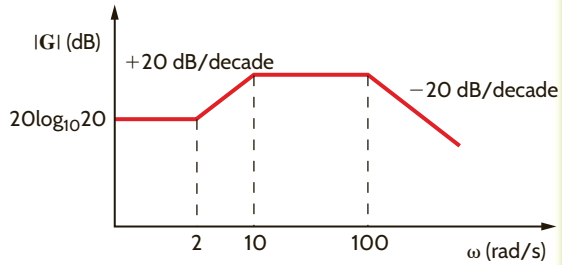

Figure E12.4

E12.5 Sketch the magnitude characteristic of the Bode plot for the transfer function

$$\mathbf{H}(j\omega) = \frac{5(j\omega + 10)}{j\omega(j\omega + 100)}$$

ANSWER:

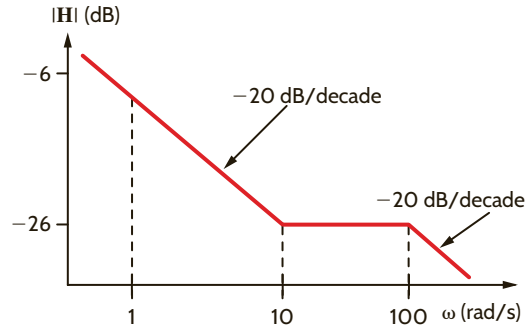

Figure E12.5

E12.6 Sketch the magnitude characteristic of the Bode plot, labeling all critical slopes and points for the function

$$\mathbf{G}(j\omega) = \frac{100(0.02j\omega + 1)}{(j\omega)^2}$$

ANSWER:

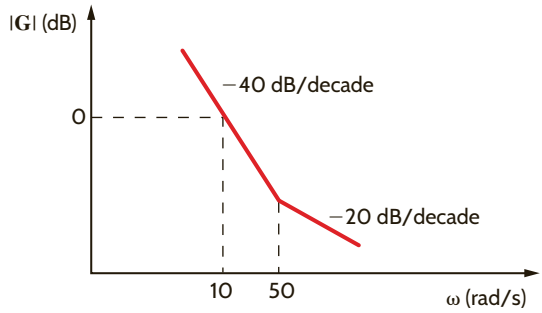

Figure E12.6

E12.7 Sketch the magnitude characteristic of the Bode plot, labeling all critical slopes and points for the function

$$\mathbf{G}(j\omega) = \frac{10j\omega}{(j\omega + 1)(j\omega + 10)}$$

ANSWER:

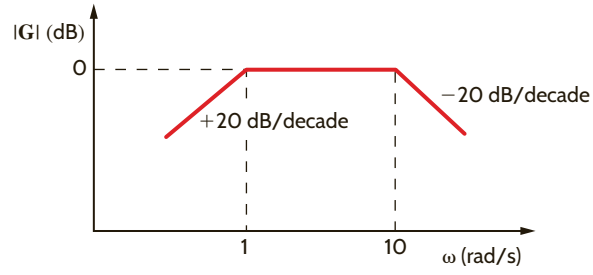

Figure E12.7

EXAMPLE 12.5

We wish to generate the Bode plot for the following transfer function:

$$\mathbf{G}_v(j\omega) = \frac{25j\omega}{(j\omega + 0.5)[(j\omega)^2 + 4j\omega + 100]}$$

SOLUTION

Expressing this function in standard form, we obtain

$$\mathbf{G}_v(j\omega) = \frac{0.5j\omega}{(2j\omega + 1)[(j\omega/10)^2 + j\omega/25 + 1]}$$

The Bode plot is shown in Fig. 12.15. The initial low-frequency slope due to the zero at the origin is +20 dB/decade, and this slope intersects the 0-dB line at $\omega = 1/K_0 = 2$ rad/s. At $\omega = 0.5$ rad/s the slope changes from +20 dB/decade to 0 dB/decade due to the presence of the pole with a break frequency at $\omega = 0.5$ rad/s. The quadratic term has a center frequency of $\omega = 10$ rad/s (i.e., $\tau = 1/10$). Since

$$2\zeta\tau = \frac{1}{25}$$

and

$$\tau = 0.1$$

then

$$\zeta = 0.2$$

Plotting the curve in Fig. 12.12a with a damping ratio of $\zeta = 0.2$ at the center frequency $\omega = 10$ rad/s completes the composite magnitude curve for the transfer function.

The initial low-frequency phase curve is +90° due to the zero at the origin. This curve and the phase curve for the simple pole and the phase curve for the quadratic term, as defined in Fig. 12.12b, are combined to yield the composite phase curve.

Figure 12.15

Bode plot for the transfer function in Example 12.5.

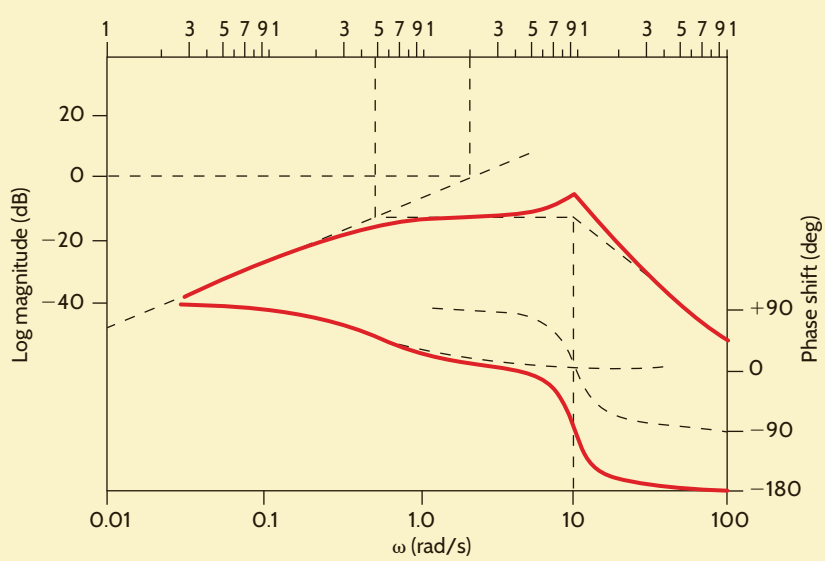

LEARNING ASSESSMENT

E12.8 Given the following function $\mathbf{G}(j\omega)$, sketch the magnitude characteristic of the Bode plot, labeling all critical slopes and points:

$$\mathbf{G}(j\omega) = \frac{0.2(j\omega + 1)}{j\omega[(j\omega/12)^2 + j\omega/36 + 1]}$$

ANSWER:

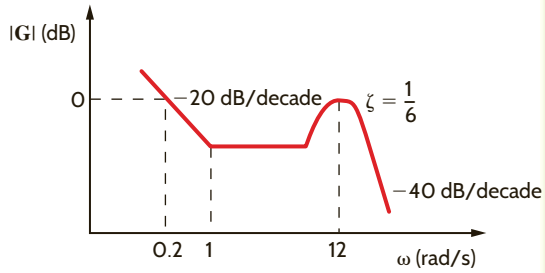

Figure E12.8

DERIVING THE TRANSFER FUNCTION FROM THE BODE PLOT The following example will serve to demonstrate the derivation process.

EXAMPLE 12.6

Given the asymptotic magnitude characteristic shown in Fig. 12.16, we wish to determine the transfer function $\mathbf{G}_v(j\omega)$.

SOLUTION

Since the initial slope is 0 dB/decade, and the level of the characteristic is 20 dB, the factor K_0 can be obtained from the expression

$$20 \text{ dB} = 20 \log_{10} K_0$$

and hence

$$K_0 = 10$$

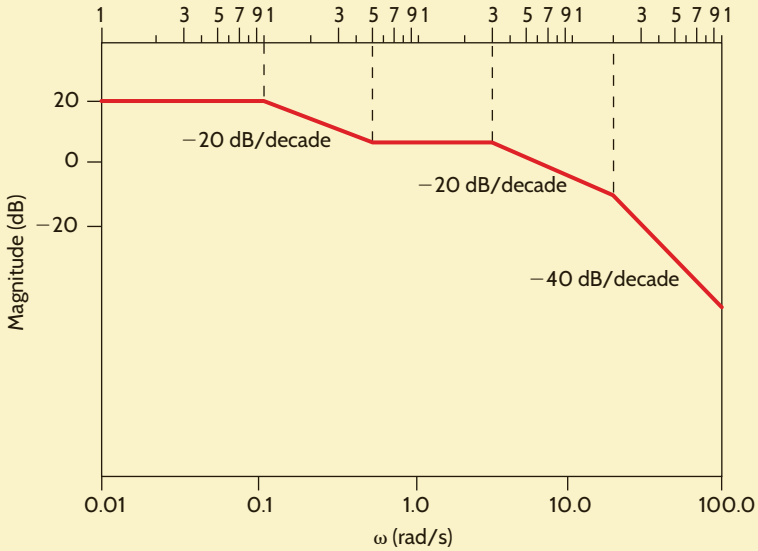

Figure 12.16 Straight-line magnitude plot employed in Example 12.6.

The −20-dB/decade slope starting at $\omega = 0.1$ rad/s indicates that the first pole has a break frequency at $\omega = 0.1$ rad/s and, therefore, one of the factors in the denominator is $(10j\omega + 1)$. The slope changes by +20 dB/decade at $\omega = 0.5$ rad/s, indicating that there is a zero

present with a break frequency at $\omega = 0.5$ rad/s and, therefore, the numerator has a factor of $(2j\omega + 1)$. Two additional poles are present with break frequencies at $\omega = 2$ rad/s and $\omega = 20$ rad/s. Therefore, the composite transfer function is

$$\mathbf{G}_v(j\omega) = \frac{10(2j\omega + 1)}{(10j\omega + 1)(0.5j\omega + 1)(0.05j\omega + 1)}$$

Note carefully the ramifications of this example with regard to network design.

LEARNING ASSESSMENTS

E12.9 Determine the transfer function $\mathbf{G}(j\omega)$ if the straight-line magnitude characteristic approximation for this function is as shown in Fig. E12.9.

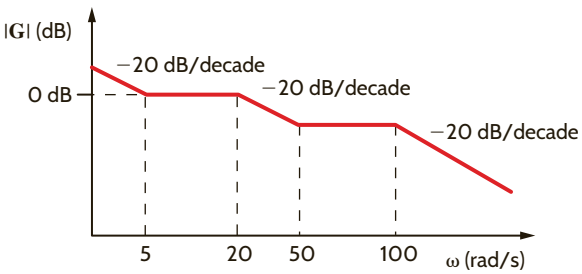

Figure E12.9

ANSWER:

$$\mathbf{G}(j\omega) = \frac{5\left(\frac{j\omega}{5} + 1\right)\left(\frac{j\omega}{50} + 1\right)}{j\omega\left(\frac{j\omega}{20} + 1\right)\left(\frac{j\omega}{100} + 1\right)}.$$

E12.10 Find $\mathbf{H}(j\omega)$ if its magnitude characteristic is shown in Fig. E12.10.

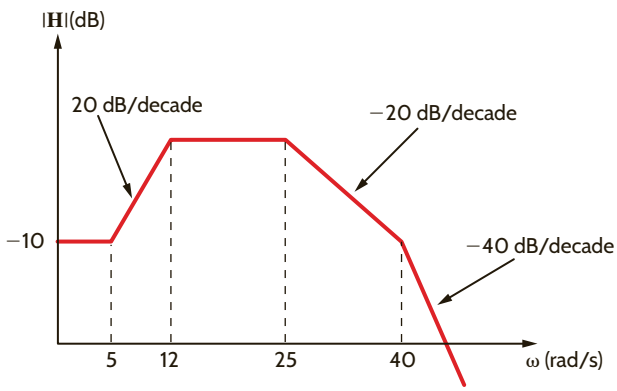

Figure E12.10

ANSWER:

$$\mathbf{H}(j\omega) = \frac{0.3162\left(\frac{j\omega}{5} + 1\right)}{\left(\frac{j\omega}{12} + 1\right)\left(\frac{j\omega}{25} + 1\right)\left(\frac{j\omega}{40} + 1\right)}.$$

12.3 Resonant Circuits

SERIES RESONANCE A circuit with extremely important frequency characteristics is shown in Fig. 12.17. The input impedance for the series *RLC* circuit is

$$\mathbf{Z}(j\omega) = R + j\omega L + \frac{1}{j\omega C} = R + j\left(\omega L - \frac{1}{\omega C}\right) \qquad \textbf{12.10}$$

The imaginary term will be zero if

$$\omega L = \frac{1}{\omega C}$$

The value of ω that satisfies this equation is

$$\omega_0 = \frac{1}{\sqrt{LC}} \qquad \textbf{12.11}$$

and at this value of ω the impedance becomes

$$\mathbf{Z}(j\omega_0) = R \qquad \textbf{12.12}$$

This frequency ω_0, at which the impedance of the circuit is purely real, is also called the *resonant frequency*, and the circuit itself at this frequency is said to be *in resonance*. Resonance is a very important consideration in engineering design. For example, engineers designing the attitude control system for the Saturn vehicles had to ensure that the control system frequency did not excite the body bending (resonant) frequencies of the vehicle. Excitation of the bending frequencies would cause oscillations that, if continued unchecked, would result in a buildup of stress until the vehicle would finally break apart.

Resonance is also a benefit, providing string and wind musical instruments with volume and rich tones.

At resonance the voltage and current are in phase and, therefore, the phase angle is zero and the power factor is unity. At resonance the impedance is a minimum and, therefore, the current is maximum for a given voltage. **Fig. 12.18** illustrates the frequency response of the series *RLC* circuit. Note that at low frequencies the impedance of the series circuit is dominated by the capacitive term, and at high frequencies the impedance is dominated by the inductive term.

Resonance can be viewed from another perspective—that of the phasor diagram. In the series circuit the current is common to every element. Therefore, the current is employed as reference. The phasor diagram is shown in **Fig. 12.19** for the three frequency values $\omega < \omega_0$, $\omega = \omega_0$, $\omega > \omega_0$.

When $\omega < \omega_0$, $\mathbf{V}_C > \mathbf{V}_L$, θ_Z is negative and the voltage $\mathbf{V}_1$ lags the current. If $\omega = \omega_0$, $\mathbf{V}_L = \mathbf{V}_C$, θ_Z is zero, and the voltage $\mathbf{V}_1$ is in phase with the current. If $\omega > \omega_0$, $\mathbf{V}_L > \mathbf{V}_C$, θ_Z is positive, and the voltage $\mathbf{V}_1$ leads the current.

For the series circuit we define what is commonly called the *quality factor Q* as

$$Q = \frac{\omega_0 L}{R} = \frac{1}{\omega_0 CR} = \frac{1}{R}\sqrt{\frac{L}{C}} \qquad \textbf{12.13}$$

Q is a very important factor in resonant circuits, and its ramifications will be illustrated throughout the remainder of this section.

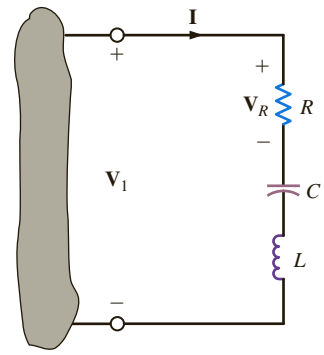

Figure 12.17
Series *RLC* circuit.

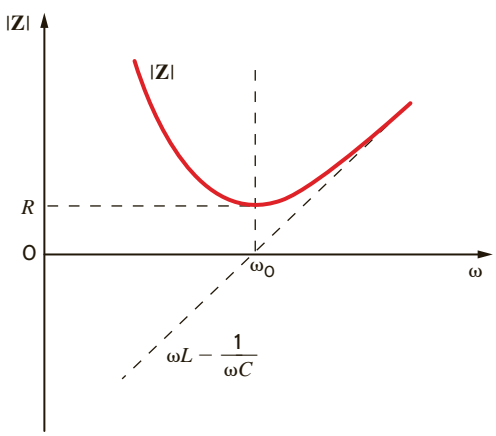

Figure 12.18
Frequency response of a series *RLC* circuit.

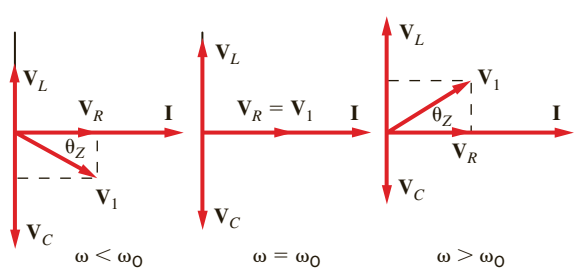

Figure 12.19
Phasor diagrams for the series *RLC* circuit.

EXAMPLE 12.7

Consider the network shown in Fig. 12.20. Let us determine the resonant frequency, the voltage across each element at resonance, and the value of the quality factor.

SOLUTION

The resonant frequency is obtained from the expression

$$\omega_0 = \frac{1}{\sqrt{LC}} = \frac{1}{\sqrt{(25)(10^{-3})(10)(10^{-6})}} = 2000 \text{ rad/s}$$

At this resonant frequency

$$\mathbf{I} = \frac{\mathbf{V}}{\mathbf{Z}} = \frac{\mathbf{V}}{R} = 5\underline{/0^\circ} \text{ A}$$

Therefore,

$$\mathbf{V}_R = (5\underline{/0^\circ})(2) = 10\underline{/0^\circ} \text{ V}$$
$$\mathbf{V}_L = j\omega_0 L\mathbf{I} = 250\underline{/90^\circ} \text{ V}$$
$$\mathbf{V}_C = \frac{\mathbf{I}}{j\omega_0 C} = 250\underline{/-90^\circ} \text{ V}$$

Note the magnitude of the voltages across the inductor and capacitor with respect to the input voltage. Note also that these voltages are equal and are 180° out of phase with one another. Therefore, the phasor diagram for this condition is shown in Fig. 12.19 for $\omega = \omega_0$. The quality factor Q derived from Eq. (12.13) is

$$Q = \frac{\omega_0 L}{R} = \frac{(2)(10^3)(25)(10^{-3})}{2} = 25$$

The voltages across the inductor and capacitor can be written in terms of Q as

$$|\mathbf{V}_L| = \omega_0 L|\mathbf{I}| = \frac{\omega_0 L}{R}|\mathbf{V}_S| = Q|\mathbf{V}_S|$$

and

$$|\mathbf{V}_C| = \frac{|\mathbf{I}|}{\omega_0 C} = \frac{1}{\omega_0 CR}|\mathbf{V}_S| = Q|\mathbf{V}_S|$$

This analysis indicates that for a given current there is a resonant voltage rise across the inductor and capacitor that is equal to the product of Q and the applied voltage.

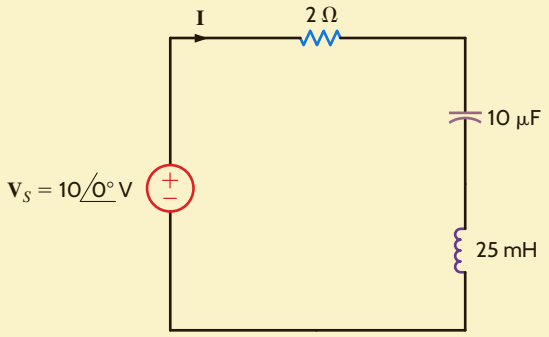

Figure 12.20
Series circuit.

EXAMPLE 12.8

In an undergraduate circuits laboratory, students are asked to construct an *RLC* network that will demonstrate resonance at $f = 1000$ Hz given a 0.02 H inductor that has a Q of 200. One student produced the circuit shown in **Fig. 12.21**, where the inductor's internal resistance is represented by R.

If the capacitor chosen to demonstrate resonance was an oil-impregnated paper capacitor rated at 300 V, let us determine the network parameters and the effect of this choice of capacitor.

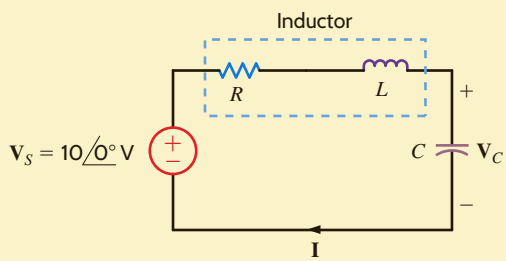

Figure 12.21
RLC series resonant network.

SOLUTION

For resonance at 1000 Hz, the student found the required capacitor value using the expression

$$\omega_0 = 2\pi f_0 = \frac{1}{\sqrt{LC}}$$

which yields

$$C = 1.27\ \mu\text{F}$$

The student selected an oil-impregnated paper capacitor rated at 300 V. The resistor value was found using the expression for Q

$$Q = \frac{\omega_0 L}{R} = 200$$

or

$$R = 1.59\ \Omega$$

At resonance, the current would be

$$\mathbf{I} = \frac{\mathbf{V}_S}{R}$$

or

$$\mathbf{I} = 6.28\angle 0°\ \text{A}$$

When constructed, the current was measured to be only

$$\mathbf{I} \sim 1\angle 0°\ \text{mA}$$

This measurement clearly indicated that the impedance seen by the source was about 10 kΩ of resistance instead of 1.59 Ω—quite a drastic difference. Suspecting that the capacitor that was selected was the source of the trouble, the student calculated what the capacitor voltage should be. If operated as designed, then at resonance,

$$\mathbf{V}_C = \frac{\mathbf{V}_S}{R}\left(\frac{1}{j\omega C}\right) = Q\mathbf{V}_S$$

or

$$\mathbf{V}_C = 2000\angle -90°\ \text{V}$$

which is more than six times the capacitor's rated voltage! This overvoltage had damaged the capacitor so that it did not function properly. When a new capacitor was selected and the source voltage reduced by a factor of 10, the network performed properly as a high Q circuit.

LEARNING ASSESSMENTS

E12.11 Given the network in Fig. E12.11, find the value C that will place the circuit in resonance at 1800 rad/s.

ANSWER:
$C = 3.09\ \mu\text{F}$.

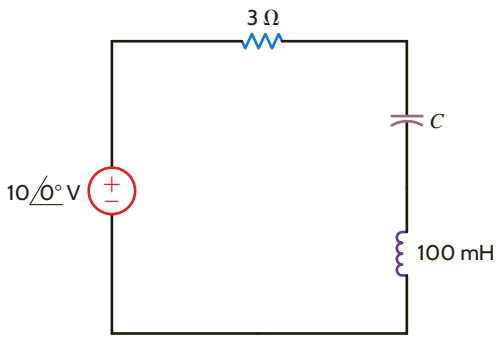

Figure E12.11

E12.12 Given the network in E12.12, determine the Q of the network and the magnitude of the voltage across the capacitor.

ANSWER:
$Q = 60$; $|\mathbf{V}_C| = 600$ **V**.

E12.13 If the resonant frequency of the network in Fig. E12.13 is 10,000 rad/s, find L. Also compute the current at resonance, $\omega_0/3$, and $3\omega_0$.

ANSWER:
$L = 100\ \mu\text{H}$; $6 \cos 10{,}000t$ A;
$5.294 \cos(3333t + 28.07°)$ A;
$5.294 \cos(30{,}000t - 28.07°)$ A.

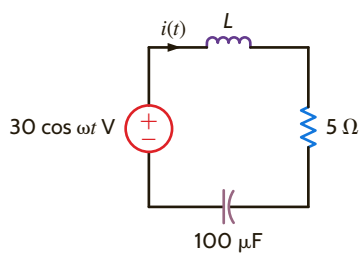

Figure E12.13

Let us develop a general expression for the ratio of $\mathbf{V}_R/\mathbf{V}_1$ for the network in Fig. 12.17 in terms of Q, ω, and ω_0. The impedance of the circuit, given by Eq. (12.10), can be used to determine the admittance, which can be expressed as

$$\begin{aligned}\mathbf{Y}(j\omega) &= \frac{1}{R[1 + j(1/R)(\omega L - 1/\omega C)]} \\ &= \frac{1}{R[1 + j(\omega L/R - 1/\omega CR)]} \\ &= \frac{1}{R[1 + jQ(\omega L/RQ - 1/\omega CRQ)]}\end{aligned} \tag{12.14}$$

Using the fact that $Q = \omega_0 L/R = 1/\omega_0 CR$, Eq. (12.14) becomes

$$\mathbf{Y}(j\omega) = \frac{1}{R[1 + jQ(\omega/\omega_0 - \omega_0/\omega)]} \tag{12.15}$$

Since $\mathbf{I} = \mathbf{Y}\mathbf{V}_1$ and the voltage across the resistor is $\mathbf{V}_R = \mathbf{I}_R$, then

$$\frac{\mathbf{V}_R}{\mathbf{V}_1} = \mathbf{G}_v(j\omega) = \frac{1}{1 + jQ(\omega/\omega_0 - \omega_0/\omega)} \tag{12.16}$$

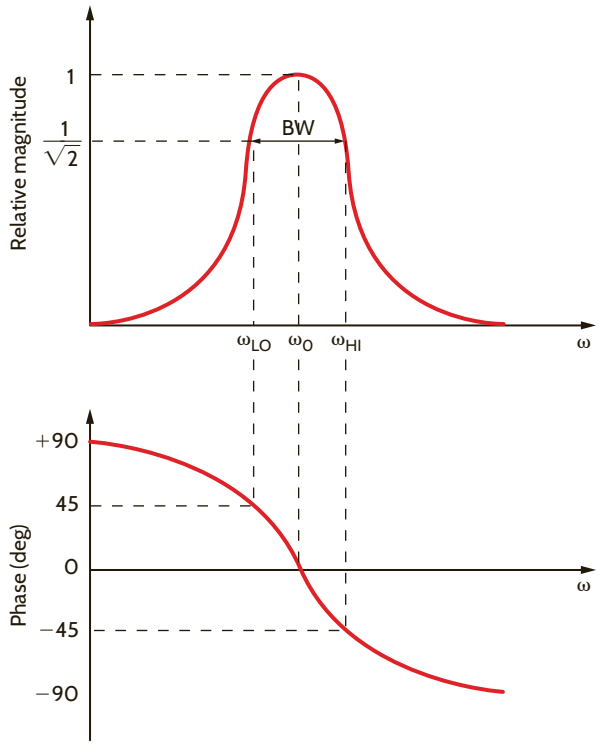

Figure 12.22
Magnitude and phase curves for Eqs. (12.17) and (12.18).

and the magnitude and phase are

$$M(\omega) = \frac{1}{[1 + Q^2(\omega/\omega_0 - \omega_0/\omega)^2]^{1/2}} \qquad \textbf{12.17}$$

and

$$\phi(\omega) = -\tan^{-1} Q\left(\frac{\omega}{\omega_0} - \frac{\omega_0}{\omega}\right) \qquad \textbf{12.18}$$

The sketches for these functions are shown in **Fig. 12.22**. Note that the circuit has the form of a band-pass filter. The bandwidth is defined as the difference between the two half-power frequencies. Since power is proportional to the square of the magnitude, these two frequencies may be derived by setting the magnitude $M(\omega) = 1/\sqrt{2}$; that is,

$$\left|\frac{1}{1 + jQ(\omega/\omega_0 - \omega_0/\omega)}\right| = \frac{1}{\sqrt{2}}$$

Therefore,

$$Q\left(\frac{\omega}{\omega_0} - \frac{\omega_0}{\omega}\right) = \pm 1 \qquad \textbf{12.19}$$

Solving this equation, we obtain four frequencies,

$$\omega = \pm\frac{\omega_0}{2Q} \pm \omega_0\sqrt{\left(\frac{1}{2Q}\right)^2 + 1} \qquad \textbf{12.20}$$

Taking only the positive values, we obtain

$$\omega_{LO} = \omega_0\left[-\frac{1}{2Q} + \sqrt{\left(\frac{1}{2Q}\right)^2 + 1}\right]$$

$$\omega_{HI} = \omega_0\left[\frac{1}{2Q} + \sqrt{\left(\frac{1}{2Q}\right)^2 + 1}\right] \qquad \textbf{12.21}$$

HINT
Half-power frequencies and their dependence on ω_0 and Q are outlined in these equations.

HINT
The bandwidth is the difference between the half-power frequencies and a function of ω_0 and Q.

Subtracting these two equations yields the bandwidth as shown in Fig. 12.22:

$$\text{BW} = \omega_{\text{HI}} - \omega_{\text{LO}} = \frac{\omega_0}{Q} \tag{12.22}$$

and multiplying the two equations yields

$$\omega_0^2 = \omega_{\text{LO}}\omega_{\text{HI}} \tag{12.23}$$

which illustrates that the resonant frequency is the geometric mean of the two half-power frequencies. Recall that the half-power frequencies are the points at which the log-magnitude curve is down 3 dB from its maximum value. Therefore, the difference between the 3-dB frequencies, which is, of course, the bandwidth, is often called the 3-dB bandwidth.

LEARNING ASSESSMENT

E12.14 For the network in Fig. E12.11, compute the two half-power frequencies and the bandwidth of the network.

ANSWER:
$\omega_{\text{HI}} = 1815$ rad/s;
$\omega_{\text{LO}} = 1785$ rad/s;
BW = 30 rad/s.

Eq. (12.13) indicates the dependence of Q on R. A high-Q series circuit has a small value of R.

Eq. (12.22) illustrates that the bandwidth is inversely proportional to Q. Therefore, the frequency selectivity of the circuit is determined by the value of Q. A high-Q circuit has a small bandwidth and, therefore, the circuit is very selective. The manner in which Q affects the frequency selectivity of the network is graphically illustrated in **Fig. 12.23**. Hence, if we pass a signal with a wide frequency range through a high-Q circuit, only the frequency components within the bandwidth of the network will not be attenuated; that is, the network acts like a band-pass filter.

Q has a more general meaning that we can explore via an energy analysis of the series resonant circuit. Let's excite a series RLC circuit at its resonant frequency as shown in **Fig. 12.24**. Recall that the impedance of the RLC circuit at resonance is just R. Therefore, the current $i(t) = (V_m/R)\cos\omega_0 t$ A. The capacitor voltage is

$$\mathbf{V}_C = \frac{1}{j\omega_0 C}\mathbf{I} = \frac{1}{j\omega_0 C}\frac{V_m}{R}\underline{/0^\circ} = \frac{V_m}{\omega_0 RC}\underline{/-90^\circ} \tag{12.24}$$

and $v_C(t) = \dfrac{V_m}{\omega_0 RC}\cos(\omega_0 t - 90^\circ) = \dfrac{V_m}{\omega_0 RC}\sin\omega_0 t$ volts. Recall from Chapter 6 that the energy stored in an inductor is $(1/2)Li^2$ and the energy stored in a capacitor is $(1/2)Cv^2$. For the inductor:

$$w_L(t) = \frac{1}{2}Li^2(t) = \frac{1}{2}L\left(\frac{V_m}{R}\cos\omega_0 t\right)^2 = \frac{V_m^2 L}{2R^2}\cos^2\omega_0 t \text{ J} \tag{12.25}$$

and for the capacitor:

$$w_C(t) = \frac{1}{2}Cv_C^2(t) = \frac{1}{2}C\left(\frac{V_m}{\omega_0 RC}\sin\omega_0 t\right)^2 = \frac{V_m^2}{2\omega_0^2 R^2 C}\sin^2\omega_0 t \text{ J} \tag{12.26}$$

At resonance, $\omega_0^2 = 1/LC$, so the energy stored in the capacitor can be rewritten as

$$w_C(t) = \frac{V_m^2}{2\left(\dfrac{1}{LC}\right)R^2 C}\sin^2\omega_0 t = \frac{V_m^2 L}{2R^2}\sin^2\omega_0 t \text{ J} \tag{12.27}$$

The total energy stored in the circuit is $w_L(t) + w_C(t) = \dfrac{V_m^2 L}{2R^2}(\cos^2\omega_0 t + \sin^2\omega_0 t)$. From trigonometry, we know that $\cos^2\omega_0 t + \sin^2\omega_0 t = 1$, so the total energy stored is a constant: $\dfrac{V_m^2 L}{2R^2}$ J.

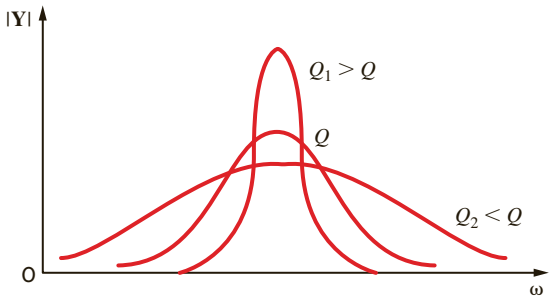

Figure 12.23
Network frequency response as a function of Q.

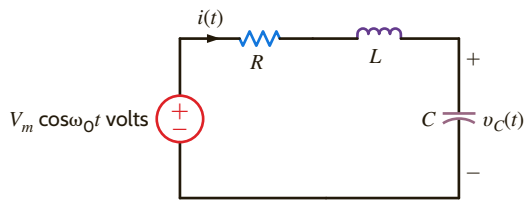

Figure 12.24
Series RLC circuit excited at its resonant frequency.

Now that we have determined that the total energy stored in the resonant circuit is a constant, let's examine the energy stored in the inductor and capacitor. **Fig. 12.25** is a plot of the normalized energy stored in each element over two periods. Eq. (12.25) and (12.27) have been divided by $\frac{V_m^2 L}{2R^2}$ to yield the normalized energy. When a circuit is in resonance, there is a continuous exchange of energy between the magnetic field of the inductor and the electric field of the capacitor. This energy exchange is like the motion of a pendulum. The energy stored in the inductor starts at a maximum value, falls to zero, and then returns to a maximum; the energy stored in the capacitor starts at zero, increases to a maximum, and then returns to zero. Note that when the energy stored in the inductor is a maximum, the energy stored in the capacitor is zero and vice versa. In the first half-cycle, the capacitor absorbs energy as fast as the inductor gives it up; the opposite happens in the next half-cycle. Even though the energy stored in each element is continuously varying, the total energy stored in the resonant circuit is constant and therefore not changing with time.

The maximum energy stored in the RLC circuit at resonance is $W_S = \frac{V_m^2 L}{2R^2}$. Let's calculate the energy dissipated per cycle in this series resonant circuit, which is

$$W_D = \int_0^T p_R\, dt = \int_0^T i^2(t) R\, dt = \int_0^T \left(\frac{V_m}{R}\cos^2 \omega_0 t\right)^2 R\, dt = \frac{V_m^2 T}{2R} \qquad \textbf{12.28}$$

The ratio of W_S to W_D is

$$\frac{W_S}{W_D} = \frac{\frac{V_m^2 L}{2R^2}}{\frac{V_m^2 T}{2R}} = \frac{L}{RT} = \frac{L}{R\frac{2\pi}{\omega_0}} = \frac{\omega_0 L}{R(2\pi)} \qquad \textbf{12.29}$$

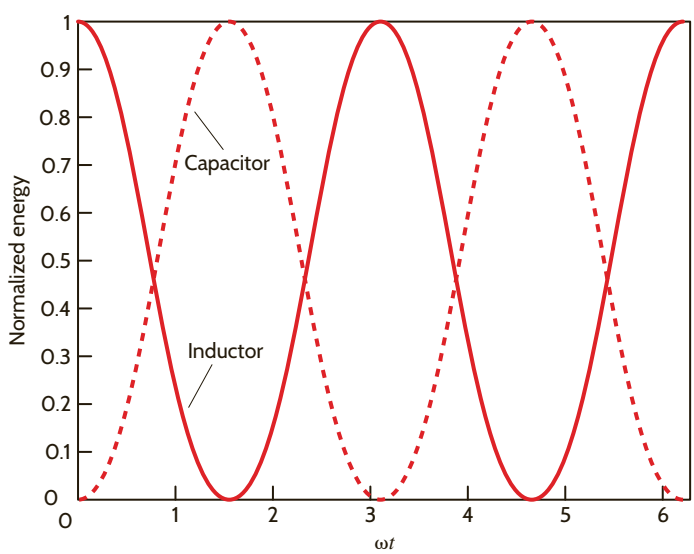

Figure 12.25
Energy transfer in a resonant circuit.

Earlier in this chapter, we defined Q to be $\omega_0 L/R$, so the equation above can be rewritten as

$$Q = 2\pi \frac{W_S}{W_D} \tag{12.30}$$

The importance of this expression for Q stems from the fact that this expression is applicable to acoustic, electrical, and mechanical systems and therefore is generally considered to be the basic definition of Q.

EXAMPLE 12.9

Given a series circuit with $R = 2\ \Omega$, $L = 2$ mH, and $C = 5\ \mu$F, we wish to determine the resonant frequency, the quality factor, and the bandwidth for the circuit. Then we will determine the change in Q and the BW if R is changed from 2 to 0.2 Ω.

SOLUTION

Using Eq. (12.11), we have

$$\omega_0 = \frac{1}{\sqrt{LC}} = \frac{1}{[(2)(10^{-3})(5)(10^{-6})]^{1/2}}$$
$$= 10^4 \text{ rad/s}$$

and therefore, the resonant frequency is $10^4/2\pi = 1592$ Hz.

The quality factor is

$$Q = \frac{\omega_0 L}{R} = \frac{(10^4)(2)(10^{-3})}{2}$$
$$= 10$$

and the bandwidth is

$$\text{BW} = \frac{\omega_0}{Q} = \frac{10^4}{10}$$
$$= 10^3 \text{ rad/s}$$

If R is changed to $R = 0.2\ \Omega$, the new value of Q is 100 and, therefore, the new BW is 10^2 rad/s.

LEARNING ASSESSMENTS

E12.15 A series circuit is composed of $R = 2\ \Omega$, $L = 40$ mH, and $C = 100\ \mu$F. Determine the bandwidth of this circuit and its resonant frequency.

ANSWER:
BW = 50 rad/s;
$\omega_0 = 500$ rad/s.

E12.16 A series *RLC* circuit has the following properties: $R = 4\ \Omega$, $\omega_0 = 4000$ rad/s, and the BW = 100 rad/s. Determine the values of L and C.

ANSWER:
$L = 40$ mH;
$C = 1.56\ \mu$F.

EXAMPLE 12.10

We wish to determine the parameters R, L, and C so that the circuit shown in Fig. 12.26 operates as a band-pass filter with an ω_0 of 1000 rad/s and a bandwidth of 100 rad/s.

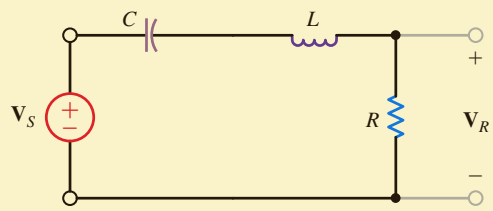

Figure 12.26
Series *RLC* circuit.

SOLUTION

The voltage gain for the network is

$$\mathbf{G}_v(j\omega) = \frac{(R/L)j\omega}{(j\omega)^2 + (R/L)j\omega + 1/LC}$$

Hence,

$$\omega_0 = \frac{1}{\sqrt{LC}}$$

and since $\omega_0 = 10^3$,

$$\frac{1}{\sqrt{LC}} = 10^6$$

The bandwidth is

$$\text{BW} = \frac{\omega_0}{Q}$$

Then

$$Q = \frac{\omega_0}{\text{BW}} = \frac{1000}{100} = 10$$

However,

$$Q = \frac{\omega_0 L}{R}$$

Therefore,

$$\frac{1000L}{R} = 10$$

Note that we have two equations in the three unknown circuit parameters R, L, and C. Hence, if we select $C = 1\ \mu\text{F}$, then

$$L = \frac{1}{10^6 C} = 1\ \text{H}$$

and

$$\frac{1000(1)}{R} = 10$$

yields

$$R = 100\ \Omega$$

Therefore, the parameters $R = 100\ \Omega$, $L = 1$ H, and $C = 1\ \mu$F will produce the proper filter characteristics.

Figure 12.27

Series resonant circuit.

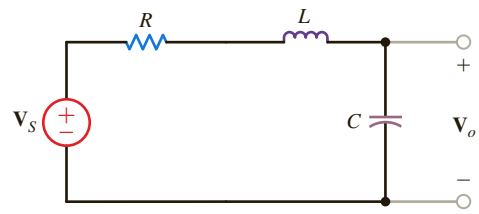

In Examples 12.7 and 12.8 we found that the voltage across the capacitor or inductor in the series resonant circuit could be quite high. In fact, it was equal to Q times the magnitude of the source voltage. With this in mind, let us reexamine this network as shown in **Fig. 12.27**. The output voltage for the network is

$$\mathbf{V}_o = \left(\frac{1/j\omega C}{R + j\omega L + 1/j\omega C}\right)\mathbf{V}_S$$

which can be written as

$$\mathbf{V}_o = \frac{\mathbf{V}_S}{1 - \omega^2 LC + j\omega CR}$$

The magnitude of this voltage can be expressed as

$$|\mathbf{V}_o| = \frac{|\mathbf{V}_S|}{\sqrt{(1 - \omega^2 LC)^2 + (\omega CR)^2}} \qquad \textbf{12.31}$$

In view of the previous discussion, we might assume that the maximum value of the output voltage would occur at the resonant frequency ω_0. Let us see whether this assumption is correct. The frequency at which $|\mathbf{V}_o|$ is maximum is the nonzero value of ω, which satisfies the equation

$$\frac{d|\mathbf{V}_o|}{d\omega} = 0 \qquad \textbf{12.32}$$

If we perform the indicated operation and solve for the nonzero ω_{max}, we obtain

$$\omega_{max} = \sqrt{\frac{1}{LC} - \frac{1}{2}\left(\frac{R}{L}\right)^2} \qquad \textbf{12.33}$$

By employing the relationships $\omega_0^2 = 1/LC$ and $Q = \omega_0 L/R$, the expression for ω_{max} can be written as

$$\begin{aligned}\omega_{max} &= \sqrt{\omega_0^2 - \frac{1}{2}\left(\frac{\omega_0}{Q}\right)^2} \\ &= \omega_0\sqrt{1 - \frac{1}{2Q^2}}\end{aligned} \qquad \textbf{12.34}$$

Clearly, $\omega_{max} \neq \omega_0$; however, ω_0 closely approximates ω_{max} if the Q is high. In addition, if we substitute Eq. (12.34) into Eq. (12.31) and use the relationships $\omega_0^2 = 1/LC$ and $\omega_0^2 C^2 R^2 = 1/Q^2$, we find that

$$|\mathbf{V}_o|_{max} = \frac{Q|\mathbf{V}_S|}{\sqrt{1 - 1/4Q^2}} \qquad \textbf{12.35}$$

Again, we see that $|\mathbf{V}_o|_{max} \approx Q|\mathbf{V}_S|$ if the network has a high Q.

EXAMPLE 12.11

Given the network in Fig. 12.27, we wish to determine ω_0 and ω_{max} for $R = 50\ \Omega$ and $R = 1\ \Omega$ if $L = 50$ mH and $C = 5\ \mu$F.

SOLUTION

The network parameters yield

$$\begin{aligned}\omega_0 &= \frac{1}{\sqrt{LC}} \\ &= \frac{1}{\sqrt{(5)(10^{-2})(5)(10^{-6})}} \\ &= 2000 \text{ rad/s}\end{aligned}$$

If $R = 50\ \Omega$, then

$$Q = \frac{\omega_0 L}{R} = \frac{(2000)(0.05)}{50} = 2$$

and

$$\omega_{max} = \omega_0\sqrt{1 - \frac{1}{2Q^2}} = 2000\sqrt{1 - \frac{1}{8}} = 1871 \text{ rad/s}$$

If $R = 1\ \Omega$, then $Q = 100$ and $\omega_{max} = 2000$ rad/s.

We can plot the frequency response of the network transfer function for $R = 50\ \Omega$ and $R = 1\ \Omega$. The transfer function is

$$\frac{\mathbf{V}_o}{\mathbf{V}_S} = \frac{1}{2.5 \times 10^{-7}(j\omega)^2 + 2.5 \times 10^{-4}(j\omega) + 1}$$

for $R = 50\ \Omega$ and

$$\frac{\mathbf{V}_o}{\mathbf{V}_S} = \frac{1}{2.5 \times 10^{-7}(j\omega)^2 + 5 \times 10^{-6}(j\omega) + 1}$$

for $R = 1\ \Omega$. The magnitude and phase characteristics for the network with $R = 50\ \Omega$ and $R = 1\ \Omega$ are shown in **Figs. 12.28a** and **b**, respectively.

Note that when the Q of the network is small, the frequency response is not selective and $\omega_0 \neq \omega_{max}$. However, if the Q is large, the frequency response is very selective and $\omega_0 \simeq \omega_{max}$.

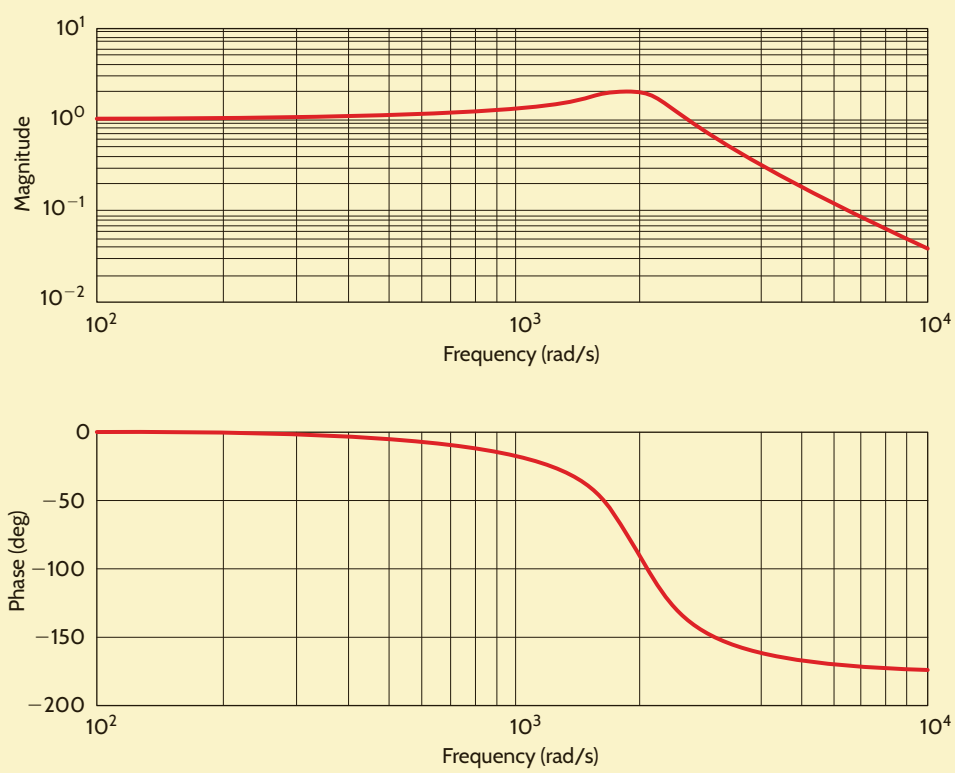

(a)

Figure 12.28

Frequency response plots for the network in Fig. 12.27 with (a) $R = 50\ \Omega$ and (b) $R = 1\ \Omega$.

Figure 12.28
(continued)

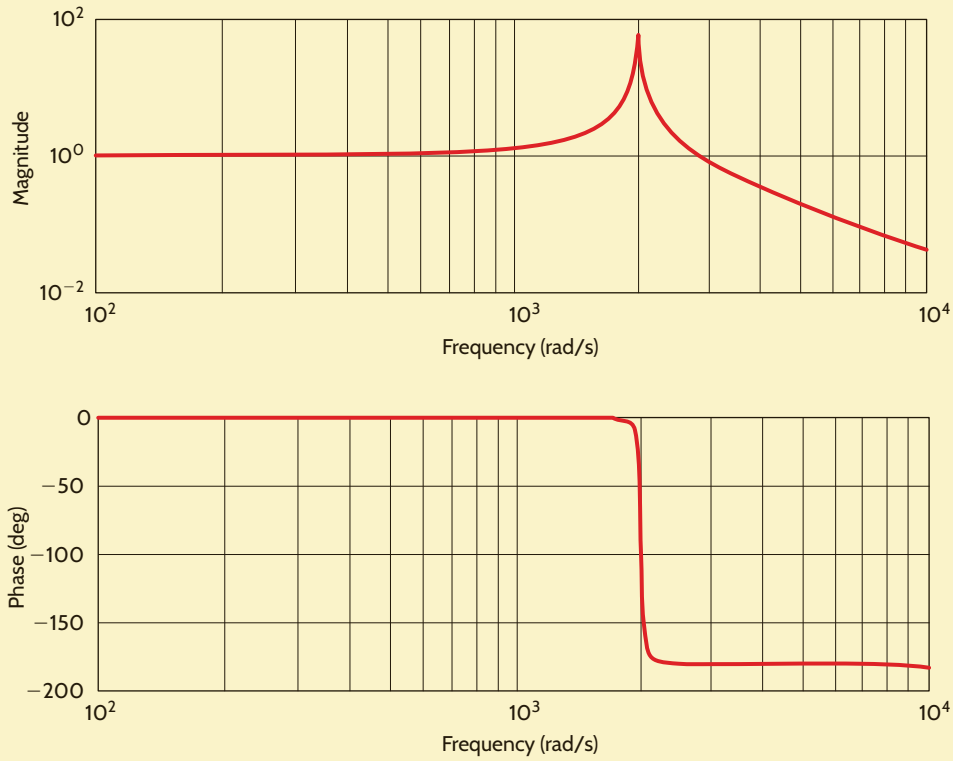

(b)

EXAMPLE 12.12

On July 1, 1940, the third longest bridge in the nation, the Tacoma Narrows Bridge, was opened to traffic across Puget Sound in Washington. On November 7, 1940, the structure collapsed in what has become the most celebrated structural failure of that century. A photograph of the bridge, taken as it swayed back and forth just before breaking apart, is shown in **Fig. 12.29**. Explaining the disaster in quantitative terms is a feat for civil engineers and structures experts, and several theories have been presented. However, the one common denominator in each explanation is that wind blowing across the bridge caused the entire structure to resonate to such an extent that the bridge tore itself apart. One can theorize that the wind, fluctuating at a frequency near the natural frequency of the bridge (0.2 Hz), drove the structure into resonance. Thus, the bridge can be roughly modeled as a second-order system. Let us design an *RLC* resonance network to demonstrate the bridge's vertical movement and investigate the effect of the wind's frequency.

SOLUTION

The *RLC* network shown in **Fig. 12.30** is a second-order system in which $v_{in}(t)$ is analogous to vertical deflection of the bridge's roadway (1 volt = 1 foot). The values of C, L, R_A, and R_B can be derived from the data taken at the site and from scale models, as follows:

$$\text{vertical deflection at failure} \approx 4 \text{ feet}$$
$$\text{wind speed at failure} \approx 42 \text{ mph}$$
$$\text{resonant frequency} = f_0 \approx 0.2 \text{ Hz}$$

The output voltage can be expressed as

$$\mathbf{V}_o(j\omega) = \frac{j\omega\left(\dfrac{R_B}{L}\right)\mathbf{V}_{in}(j\omega)}{-\omega^2 + j\omega\left(\dfrac{R_A + R_B}{L}\right) + \dfrac{1}{LC}}$$

Figure 12.29
Tacoma Narrows Bridge on the verge of collapse (AP Photo).

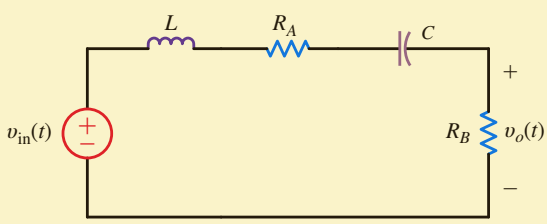

Figure 12.30
RLC resonance network for a simple Tacoma Narrows Bridge simulation.

from which we can easily extract the following expressions:

$$\omega_0 = \frac{1}{\sqrt{LC}} = 2\pi(0.2)\ \text{rad/s}$$

$$2\zeta\omega_0 = \frac{R_A + R_B}{L}$$

and

$$\frac{\mathbf{V}_o(j\omega_0)}{\mathbf{V}_{in}(j\omega_0)} = \frac{R_B}{R_A + R_B} \approx \frac{4\ \text{feet}}{42\ \text{mph}}$$

Let us choose $R_B = 1\ \Omega$ and $R_A = 9.5\ \Omega$. Having no data for the damping ratio, ζ, we will select $L = 20$ H, which yields $\zeta = 0.209$ and $Q = 2.39$, which seem reasonable for such a large structure. Given the aforementioned choices, the required capacitor value is $C = 31.66$ mF. Using these circuit values, we now simulate the effect of 42 mph winds fluctuating at 0.05 Hz, 0.1 Hz, and 0.2 Hz using an ac analysis at the three frequencies of interest.

The results are shown in **Fig. 12.31**. Note that at 0.05 Hz the vertical deflection (1 ft/V) is only 0.44 feet, whereas at 0.1 Hz the bridge undulates about 1.07 feet. Finally, at the bridge's resonant frequency of 0.2 Hz, the bridge is oscillating 3.77 feet—catastrophic failure.

Clearly, we have used an extremely simplistic approach to modeling something as complicated as the Tacoma Narrows Bridge. However, we will revisit this event in Chapter 14 and examine it more closely with a more accurate model (K. Y. Billah and R. H. Scalan, "Resonance, Tacoma Narrows Bridge Failure, and Undergraduate Physics Textbooks," *American Journal of Physics*, 1991, vol. 59, no. 2, pp. 118–124).

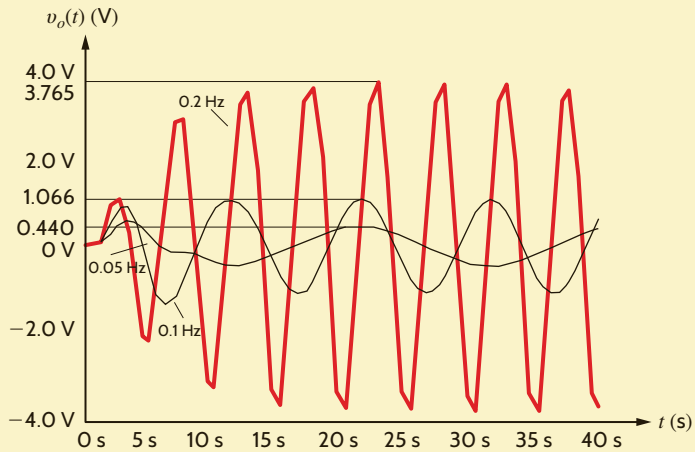

Figure 12.31
Simulated vertical deflection (1 volt = 1 foot) for the Tacoma Narrows Bridge for wind shift frequencies of 0.05, 0.1, and 0.2 Hz.

PARALLEL RESONANCE In our presentation of resonance thus far, we have focused our discussion on the series resonant circuit. Of course, resonance and all its ramifications still apply if the *RLC* elements are arranged in parallel. In fact, the series and parallel resonant circuits possess many similarities and a few differences.

Consider the network shown in **Fig. 12.32**. The source current $\mathbf{I}_S$ can be expressed as

$$\begin{aligned}\mathbf{I}_S &= \mathbf{I}_G + \mathbf{I}_C + \mathbf{I}_L \\ &= \mathbf{V}_S G + j\omega C\mathbf{V}_S + \frac{\mathbf{V}_S}{j\omega L} \\ &= \mathbf{V}_S\left[G + j\left(\omega C - \frac{1}{\omega L}\right)\right]\end{aligned}$$

When the network is in resonance,

$$\mathbf{I}_S = G\mathbf{V}_S \qquad \textbf{12.36}$$

The input admittance for the parallel *RLC* circuit is

$$\mathbf{Y}(j\omega) = G + j\omega C + \frac{1}{j\omega L} \qquad \textbf{12.37}$$

and the admittance of the parallel circuit, at resonance, is

$$\mathbf{Y}(j\omega_0) = G \qquad \textbf{12.38}$$

that is, all the source current flows through the conductance G. Does this mean that there is no current in L or C? Definitely not! $\mathbf{I}_C$ and $\mathbf{I}_L$ are equal in magnitude but 180° out of phase with one another. Therefore, $\mathbf{I}_x$, as shown in Fig. 12.32, is zero. In addition, if $G = 0$, the source current is zero. What is actually taking place, however, is an energy exchange between the electric field of the capacitor and the magnetic field of the inductor. As one increases, the other decreases and vice versa.

Analogous to the series resonant case, the frequency response, shown in **Fig. 12.33a**, for the parallel resonant circuit reveals that the admittance is dominated by the inductive term at low frequencies and by the capacitive term at high frequencies. Similarly, the phasor diagram

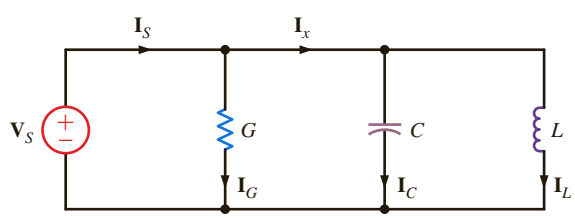

Figure 12.32
Parallel *RLC* circuit.

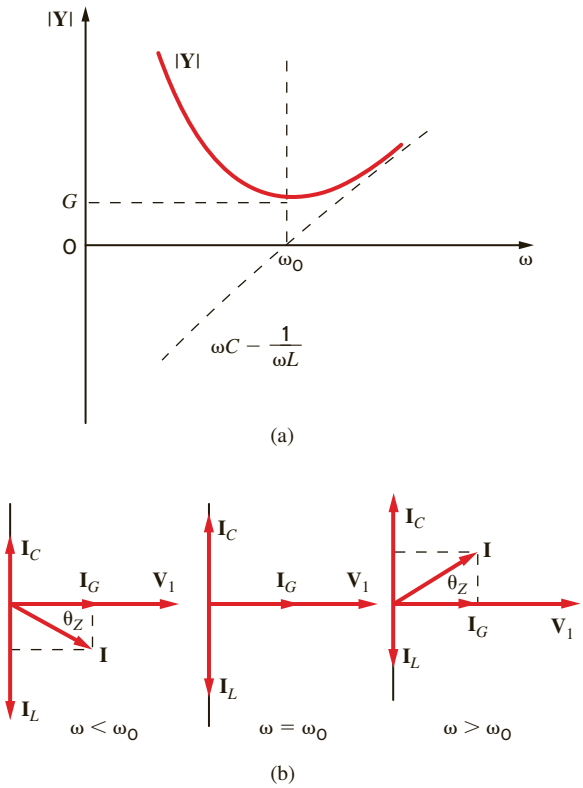

Figure 12.33

(a) The frequency plot of the admittance and (b) the phasor diagram for the parallel resonant circuit.

for the parallel resonant circuit, shown in **Fig. 12.33b**, again has much in common with that of the series circuit. For $\omega < \omega_0$, the impedance phase angle, θ_Z, is positive, again indicating that inductance dominates in the parallel circuit at low frequencies. For $\omega > \omega_0$, θ_Z is negative, and the capacitance dominates.

Applying the general definition of resonance to the parallel resonant circuit yields an interesting result

$$Q = \frac{R}{\omega_0 L} = \frac{1}{G\omega_0 L} = R\omega_0 C = \frac{\omega_0 C}{G} \qquad \textbf{12.39}$$

This result appears to be the reciprocal of Q for the series case. However, the *RLC* currents in the parallel case mimic the voltages in the series case:

$$|\mathbf{I}_C| = Q|\mathbf{I}_S| \qquad \textbf{12.40}$$

and

$$|\mathbf{I}_L| = Q|\mathbf{I}_S|$$

EXAMPLE 12.13

The network in Fig. 12.32 has the following parameters:

$$\mathbf{V}_S = 120\angle 0^\circ \text{ V}, \qquad G = 0.01 \text{ S},$$
$$C = 600\ \mu\text{F}, \quad \text{and} \quad L = 120 \text{ mH}$$

If the source operates at the resonant frequency of the network, compute all the branch currents.

SOLUTION

The resonant frequency for the network is

$$\omega_0 = \frac{1}{\sqrt{LC}}$$
$$= \frac{1}{\sqrt{(120)(10^{-3})(600)(10^{-6})}}$$
$$= 117.85 \text{ rad/s}$$

At this frequency

$$\mathbf{Y}_C = j\omega_0 C = j7.07 \times 10^{-2}\ \text{S}$$

and

$$\mathbf{Y}_L = -j\left(\frac{1}{\omega_0 L}\right) = -j7.07 \times 10^{-2}\ \text{S}$$

The branch currents are then

$$\mathbf{I}_G = G\mathbf{V}_S = 1.2\underline{/0^\circ}\ \text{A}$$
$$\mathbf{I}_C = \mathbf{Y}_C\mathbf{V}_S = 8.49\underline{/90^\circ}\ \text{A}$$
$$\mathbf{I}_L = \mathbf{Y}_L\mathbf{V}_S = 8.49\underline{/-90^\circ}\ \text{A}$$

and

$$\begin{aligned}\mathbf{I}_S &= \mathbf{I}_G + \mathbf{I}_C + \mathbf{I}_L \\ &= \mathbf{I}_G = 1.2\underline{/0^\circ}\ \text{A}\end{aligned}$$

As the analysis indicates, the source supplies only the losses in the resistive element. In addition, the source voltage and current are in phase and, therefore, the power factor is unity.

EXAMPLE 12.14

Given the parallel *RLC* circuit in Fig. 12.34,

a. Derive the expression for the resonant frequency, the half-power frequencies, the bandwidth, and the quality factor for the transfer characteristic $\mathbf{V}_{out}/\mathbf{I}_{in}$ in terms of the circuit parameters R, L, and C.

b. Compute the quantities in part (a) if $R = 1\ \text{k}\Omega$, $L = 10$ mH, and $C = 100\ \mu\text{F}$.

SOLUTION

a. The output voltage can be written as

$$\mathbf{V}_{out} = \frac{\mathbf{I}_{in}}{\mathbf{Y}_T}$$

and, therefore, the magnitude of the transfer characteristic can be expressed as

$$\left|\frac{\mathbf{V}_{out}}{\mathbf{I}_{in}}\right| = \frac{1}{\sqrt{(1/R^2) + (\omega C - 1/\omega L)^2}}$$

The transfer characteristic is a maximum at the resonant frequency

$$\omega_0 = \frac{1}{\sqrt{LC}} \qquad \textbf{12.41}$$

and at this frequency

$$\left|\frac{\mathbf{V}_{out}}{\mathbf{I}_{in}}\right|_{max} = R \qquad \textbf{12.42}$$

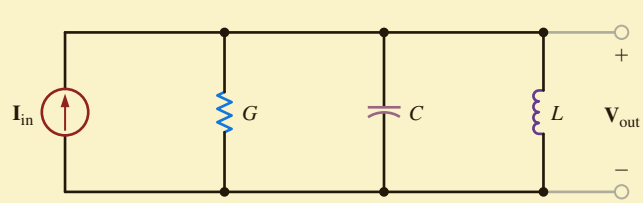

Figure 12.34
Circuit used in Example 12.14.

As demonstrated earlier, at the half-power frequencies the magnitude is equal to $1/\sqrt{2}$ of its maximum value, and hence the half-power frequencies can be obtained from the expression

$$\frac{1}{\sqrt{(1/R^2) + (\omega C - 1/\omega L)^2}} = \frac{R}{\sqrt{2}}$$

Solving this equation and taking only the positive values of ω yields

$$\omega_{LO} = -\frac{1}{2RC} + \sqrt{\frac{1}{(2RC)^2} + \frac{1}{LC}} \qquad \textbf{12.43}$$

and

$$\omega_{HI} = \frac{1}{2RC} + \sqrt{\frac{1}{(2RC)^2} + \frac{1}{LC}} \qquad \textbf{12.44}$$

Subtracting these two half-power frequencies yields the bandwidth

$$\begin{aligned} \text{BW} &= \omega_{HI} - \omega_{LO} \qquad \textbf{12.45} \\ &= \frac{1}{RC} \end{aligned}$$

Therefore, the quality factor is

$$\begin{aligned} Q &= \frac{\omega_0}{\text{BW}} \\ &= \frac{RC}{\sqrt{LC}} \qquad \textbf{12.46} \\ &= R\sqrt{\frac{C}{L}} \end{aligned}$$

Using Eqs. (12.41), (12.45), and (12.46), we can write Eqs. (12.43) and (12.44) as

$$\omega_{LO} = \omega_0\left[\frac{-1}{2Q} + \sqrt{\frac{1}{(2Q)^2} + 1}\right] \qquad \textbf{12.47}$$

$$\omega_{HI} = \omega_0\left[\frac{1}{2Q} + \sqrt{\frac{1}{(2Q)^2} + 1}\right] \qquad \textbf{12.48}$$

b. Using the values given for the circuit components, we find that

$$\omega_0 = \frac{1}{\sqrt{(10^{-2})(10^{-4})}} = 10^3 \text{ rad/s}$$

The half-power frequencies are

$$\begin{aligned} \omega_{LO} &= \frac{-1}{(2)(10^3)(10^{-4})} + \sqrt{\frac{1}{[(2)(10^{-1})]^2} + 10^6} \\ &= 995 \text{ rad/s} \end{aligned}$$

and

$$\omega_{HI} = 1005 \text{ rad/s}$$

Therefore, the bandwidth is

$$\text{BW} = \omega_{HI} = \omega_{LO} = 10 \text{ rad/s}$$

and

$$\begin{aligned} Q &= 10^3\sqrt{\frac{10^{-4}}{10^{-2}}} \\ &= 100 \end{aligned}$$

EXAMPLE 12.15

Two radio stations, WHEW and WHAT, broadcast in the same listening area: WHEW broadcasts at 100 MHz and WHAT at 98 MHz. A single-stage tuned amplifier, such as that shown in Fig. 12.35, can be used as a tuner to filter out one of the stations. However, single-stage tuned amplifiers have poor selectivity due to their wide bandwidths. To reduce the bandwidth (increase the quality factor) of single-stage tuned amplifiers, designers employ a technique called synchronous tuning. In this process, identical tuned amplifiers are cascaded. To demonstrate this phenomenon, let us generate a Bode plot for the amplifier shown in Fig. 12.35 when it is tuned to WHEW (100 MHz), using one, two, three, and four stages of amplification.

SOLUTION

Using the circuit for a single-stage amplifier shown in Fig. 12.35, we can cascade the stages to form a four-stage synchronously tuned amplifier. If we now plot the frequency response over the range from 90 MHz to 110 MHz, we obtain the Bode plot shown in Fig. 12.36.

From the Bode plot in Fig. 12.36 we see that increasing the number of stages does indeed decrease the bandwidth without altering the center frequency. As a result, the quality factor and selectivity increase. Accordingly, as we add stages, the gain at 98 MHz (WHAT's frequency) decreases, and that station is "tuned out."

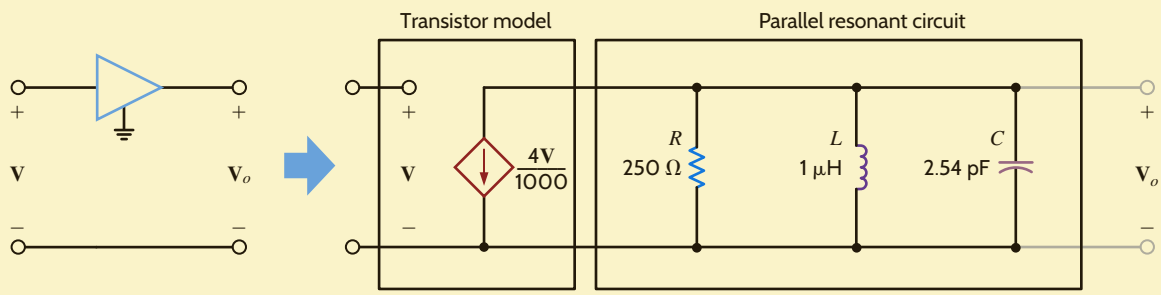

Figure 12.35
Single-stage tuned amplifier.

Figure 12.36
Bode plots for one-, two-, three-, and four-stage tuned amplifiers.

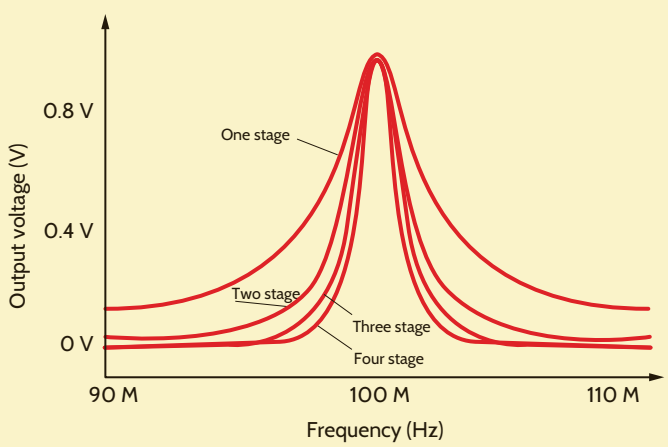

LEARNING ASSESSMENTS

E12.17 A parallel *RLC* circuit has the following parameters: $R = 2\ \text{k}\Omega$, $L = 20$ mH, and $C = 150\ \mu\text{F}$. Determine the resonant frequency, the Q, and the bandwidth of the circuit.

ANSWER:
$\omega_0 = 577$ rad/s; $Q = 173$; BW $= 3.33$ rad/s.

E12.18 A parallel *RLC* circuit has the following parameters: $R = 6\ \text{k}\Omega$, BW $= 1000$ rad/s, and $Q = 120$. Determine the values of L, C, and ω_0.

ANSWER:
$L = 417.5\ \mu\text{H}$; $C = 0.167\ \mu\text{F}$; $\omega_0 = 119{,}760$ rad/s.

E12.19 The parallel *RLC* resonant circuit in Fig. E12.19 has a resonant frequency of 12,000 rad/s and an admittance of 5 mS at resonance. Find R and C.

ANSWER:
$R = 200\ \Omega$; $C = 69.44$ nF.

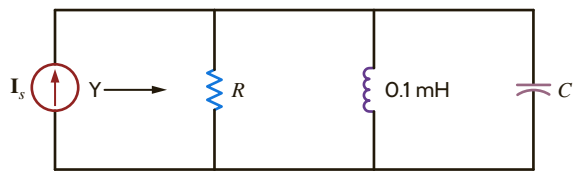

Figure E12.19

In general, the resistance of the winding of an inductor cannot be neglected, and hence a more practical parallel resonant circuit is the one shown in Fig. 12.37. The input admittance of this circuit is

$$\begin{aligned}\mathbf{Y}(j\omega) &= j\omega C + \frac{1}{R + j\omega L}\\ &= j\omega C + \frac{R - j\omega L}{R^2 + \omega^2 L^2}\\ &= \frac{R}{R^2 + \omega^2 L^2} + j\left(\omega C - \frac{\omega L}{R^2 + \omega^2 L^2}\right)\end{aligned}$$

The frequency at which the admittance is purely real is

$$\omega_r C - \frac{\omega_r L}{R^2 + \omega_r^2 L^2} = 0$$

$$\omega_r = \sqrt{\frac{1}{LC} - \frac{R^2}{L^2}} \qquad \textbf{12.49}$$

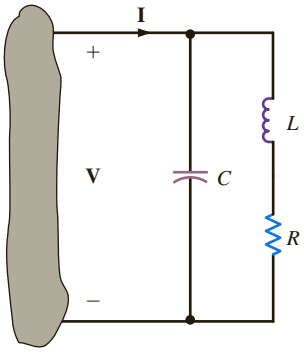

Figure 12.37
Practical parallel resonant circuit.

EXAMPLE 12.16

Given the tank circuit in Fig. 12.38, let us determine ω_0 and ω_r for $R = 50\ \Omega$ and $R = 5\ \Omega$.

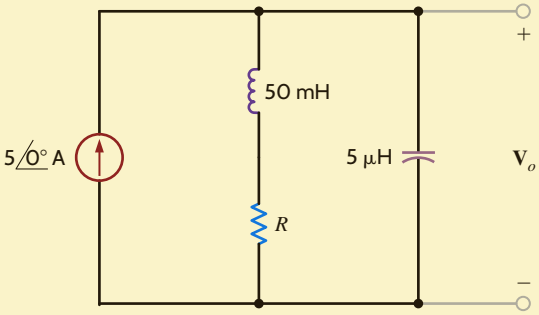

Figure 12.38
Tank circuit used in Example 12.16.

SOLUTION Using the network parameter values, we obtain

$$\begin{aligned}\omega_0 &= \frac{1}{\sqrt{LC}}\\ &= \frac{1}{\sqrt{(0.05)(5)(10^{-6})}}\\ &= 2000 \text{ rad/s}\\ f_0 &= 318.3 \text{ Hz}\end{aligned}$$

If $R = 50\ \Omega$, then

$$\begin{aligned}\omega_r &= \sqrt{\frac{1}{\sqrt{LC}} - \frac{R^2}{L^2}}\\ &= \sqrt{\frac{1}{(0.05)(5)(10^{-6})} - \left(\frac{50}{0.05}\right)^2}\\ &= 1732 \text{ rad/s}\\ f_r &= 275.7 \text{ Hz}\end{aligned}$$

If $R = 5\ \Omega$, then

$$\begin{aligned}\omega_r &= \sqrt{\frac{1}{(0.05)(5)(10^{-6})} - \left(\frac{5}{0.05}\right)^2}\\ &= 1997 \text{ rad/s}\\ f_r &= 317.9 \text{ Hz}\end{aligned}$$

Note that as $R \to 0$, $\omega_r \to \omega_0$. This fact is also illustrated in the frequency-response curves in **Figs. 12.39a** and **b**, where we have plotted $|\mathbf{V}_o|$ versus frequency for $R = 50\ \Omega$ and $R = 5\ \Omega$, respectively.

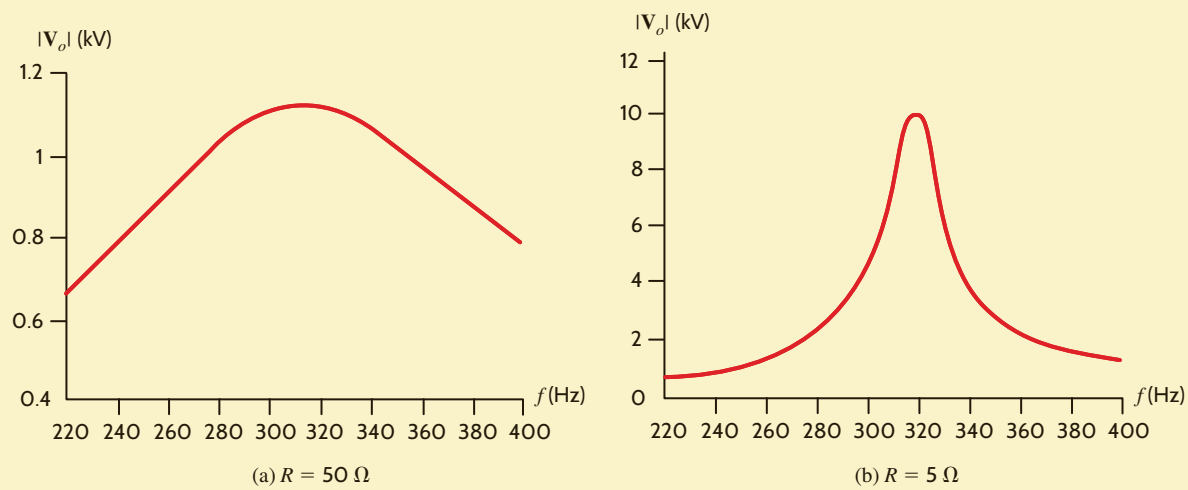

Figure 12.39
Frequency-response curves for Example 12.16.

Let us now try to relate some of the things we have learned about resonance to the Bode plots we presented earlier. The admittance for the series resonant circuit is

$$\begin{aligned}\mathbf{Y}(j\omega) &= \frac{1}{R + j\omega L + 1/j\omega C}\\ &= \frac{j\omega C}{(j\omega)^2 LC + j\omega CR + 1}\end{aligned} \qquad \textbf{12.50}$$

The standard form for the quadratic factor is

$$(j\omega\tau)^2 + 2\zeta\omega\tau j + 1$$

where $\tau = 1/\omega_0$, and hence in general the quadratic factor can be written as

$$\frac{(j\omega)^2}{\omega_0^2} + \frac{2\zeta\omega}{\omega_0} j + 1 \qquad \textbf{12.51}$$

If we now compare this form of the quadratic factor with the denominator of $\mathbf{Y}(j\omega)$, we find that

$$\omega_0^2 = \frac{1}{LC}$$

$$\frac{2\zeta}{\omega_0} = CR$$

and therefore,

$$\zeta = \frac{R}{2}\sqrt{\frac{C}{L}}$$

However, from Eq. (12.13),

$$Q = \frac{1}{R}\sqrt{\frac{L}{C}}$$

and hence,

$$Q = \frac{1}{2\zeta} \qquad \textbf{12.52}$$

To illustrate the significance of this equation, consider the Bode plot for the function $\mathbf{Y}(j\omega)$. The plot has an initial slope of ± 20 dB/decade due to the zero at the origin. If $\zeta > 1$, the poles represented by the quadratic factor in the denominator will simply roll off the frequency response, as illustrated in Fig. 12.12a, and at high frequencies the slope of the composite characteristic will be -20 dB/decade. If $0 < \zeta < 1$, the frequency response will peak as shown in Fig. 12.12a, and the sharpness of the peak will be controlled by ζ. If ζ is very small, the peak of the frequency response is very narrow, the Q of the network is very large, and the circuit is very selective in filtering the input signal. Eq. (12.52) and Fig. 12.23 illustrate the connections among the frequency response, the Q, and the ζ of a network.

12.4 Scaling

Throughout this book we have employed a host of examples to illustrate the concepts being discussed. In many cases the actual values of the parameters were unrealistic in a practical sense, even though they may have simplified the presentation. In this section we illustrate how to *scale* the circuits to make them more realistic.

There are two ways to scale a circuit: *magnitude* or *impedance scaling* and *frequency scaling*. To magnitude scale a circuit, we simply multiply the impedance of each element by a scale factor K_M. Therefore, a resistor R becomes $K_M R$. Multiplying the impedance of an inductor $j\omega L$ by K_M yields a new inductor $K_M L$, and multiplying the impedance of a capacitor $1/j\omega C$ by K_M yields a new capacitor C/K_M. Therefore, in magnitude scaling,

HINT
Magnitude or impedance scaling.

$$\begin{aligned} R' &\to K_M R \\ L' &\to K_M L \\ C' &\to \frac{C}{K_M} \end{aligned} \qquad \textbf{12.53}$$

since

$$\omega_0' = \frac{1}{\sqrt{L'C'}} = \frac{1}{\sqrt{K_M LC/K_M}} = \omega_0$$

and Q' is

$$Q' = \frac{\omega_0 L'}{R'} = \frac{\omega_0 K_M L}{K_M R} = Q$$

The resonant frequency, the quality factor and, therefore, the bandwidth are unaffected by magnitude scaling.

In frequency scaling the scale factor is denoted as K_F. The resistor is frequency independent and, therefore, unaffected by this scaling. The new inductor L', which has the same impedance at the scaled frequency ω_1', must satisfy the equation

$$j\omega_1 L = j\omega_1' L'$$

where $\omega_1' = k_F \omega_1$. Therefore,

$$j\omega_1 L = jK_F \omega_1 L'$$

Hence, the new inductor value is

$$L' = \frac{L}{K_F}$$

Using a similar argument, we find that

$$C' = \frac{C}{K_F}$$

HINT
Frequency scaling.

Therefore, to frequency scale by a factor K_F,

$$\begin{aligned} R' &\to R \\ L' &\to \frac{L}{K_F} \\ C' &\to \frac{C}{K_F} \end{aligned} \qquad \textbf{12.54}$$

Note that

$$\omega_0' = \frac{1}{\sqrt{(L/K_F)(C/K_F)}} = K_F \omega_0$$

and

$$Q' = \frac{K_F \omega_0 L}{R K_F} = Q$$

and therefore,

$$\mathrm{BW}' = K_F(\mathrm{BW})$$

Hence, the resonant frequency and bandwidth of the circuit are affected by frequency scaling.

EXAMPLE 12.17

If the values of the circuit parameters in Fig 12.37 are $R = 2\ \Omega$, $L = 1$ H, and $C = 1/2$ F, let us determine the values of the elements if the circuit is magnitude scaled by a factor $K_M = 10^2$ and frequency scaled by a factor $K_F = 10^2$.

SOLUTION

The magnitude scaling yields

$$\begin{aligned} R' &= 2K_M = 200\ \Omega \\ L' &= (1)K_M = 100\ \text{H} \\ C' &= \frac{1}{2}\frac{1}{K_M} = \frac{1}{200}\ \text{F} \end{aligned}$$

Applying frequency scaling to these values yields the final results:

$$\begin{aligned} R'' &= 200\ \Omega \\ L'' &= \frac{100}{K_F} = 100\ \mu\text{H} \\ C'' &= \frac{1}{200}\frac{1}{K_F} = 0.005\ \mu\text{F} \end{aligned}$$

LEARNING ASSESSMENT

E12.20 An *RLC* network has the following parameter values: $R = 10\ \Omega$, $L = 1$ H, and $C = 2$ F. Determine the values of the circuit elements if the circuit is magnitude scaled by a factor of 100 and frequency scaled by a factor of 10,000.

ANSWER:
$R = 1\ \text{k}\Omega$;
$L = 10$ mH; $C = 2\ \mu$F.

12.5 Filter Networks

PASSIVE FILTERS A filter network is generally designed to pass signals with a specific frequency range and reject or attenuate signals whose frequency spectrum is outside this pass-band. The most common filters are *low-pass* filters, which pass low frequencies and reject high frequencies; *high-pass* filters, which pass high frequencies and block low frequencies; *band-pass* filters, which pass some particular band of frequencies and reject all frequencies outside the range; and *band-rejection* filters, which are specifically designed to reject a particular band of frequencies and pass all other frequencies.

The ideal frequency characteristic for a low-pass filter is shown in **Fig. 12.40a**. Also shown is a typical or physically realizable characteristic. Ideally, we would like the low-pass filter to pass all frequencies to some frequency ω_0 and pass no frequency above that value; however, it is not possible to design such a filter with linear circuit elements. Hence, we must be content to employ filters that we can actually build in the laboratory, and these filters have frequency characteristics that are simply not ideal.

A simple low-pass filter network is shown in **Fig. 12.40b**. The voltage gain for the network is

$$\mathbf{G}_v(j\omega) = \frac{1}{1 + j\omega RC} \qquad \textbf{12.55}$$

which can be written as

$$\mathbf{G}_v(j\omega) = \frac{1}{1 + j\omega\tau} \qquad \textbf{12.56}$$

where $\tau = RC$, the time constant. The amplitude characteristic is

$$M(\omega) = \frac{1}{[1 + (\omega\tau)^2]^{1/2}} \qquad \textbf{12.57}$$

and the phase characteristic is

$$\phi(\omega) = -\tan^{-1}\omega\tau \qquad \textbf{12.58}$$

Note that at the break frequency, $\omega = \frac{1}{\tau}$, the amplitude is

$$M\left(\omega = \frac{1}{\tau}\right) = \frac{1}{\sqrt{2}} \qquad \textbf{12.59}$$

The break frequency is also commonly called the *half-power frequency*. This name is derived from the fact that if the voltage or current is $1/\sqrt{2}$ of its maximum value, then the power, which is proportional to the square of the voltage or current, is one-half its maximum value.

The magnitude, in decibels, and phase curves for this simple low-pass circuit are shown in **Fig. 12.40c**. Note that the magnitude curve is flat for low frequencies and rolls off at high frequencies. The phase shifts from 0° at low frequencies to −90° at high frequencies.

The ideal frequency characteristic for a high-pass filter is shown in **Fig. 12.41a**, together with a typical characteristic that we could achieve with linear circuit components. Ideally, the high-pass filter passes all frequencies above some frequency ω_0 and no frequencies below that value.

A simple high-pass filter network is shown in **Fig. 12.41b**. This is the same network as shown in Fig. 12.40b, except that the output voltage is taken across the resistor. The voltage gain for this network is

$$\mathbf{G}_v(j\omega) = \frac{j\omega\tau}{1 + j\omega\tau} \qquad \textbf{12.60}$$

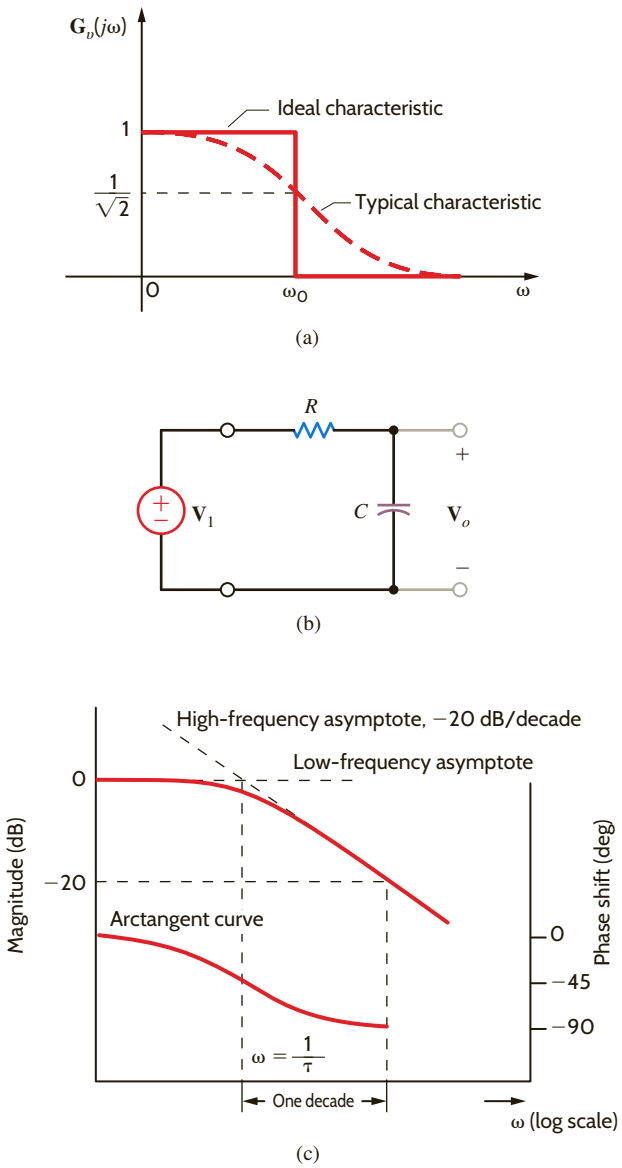

Figure 12.40

Low-pass filter circuit and its frequency characteristics.

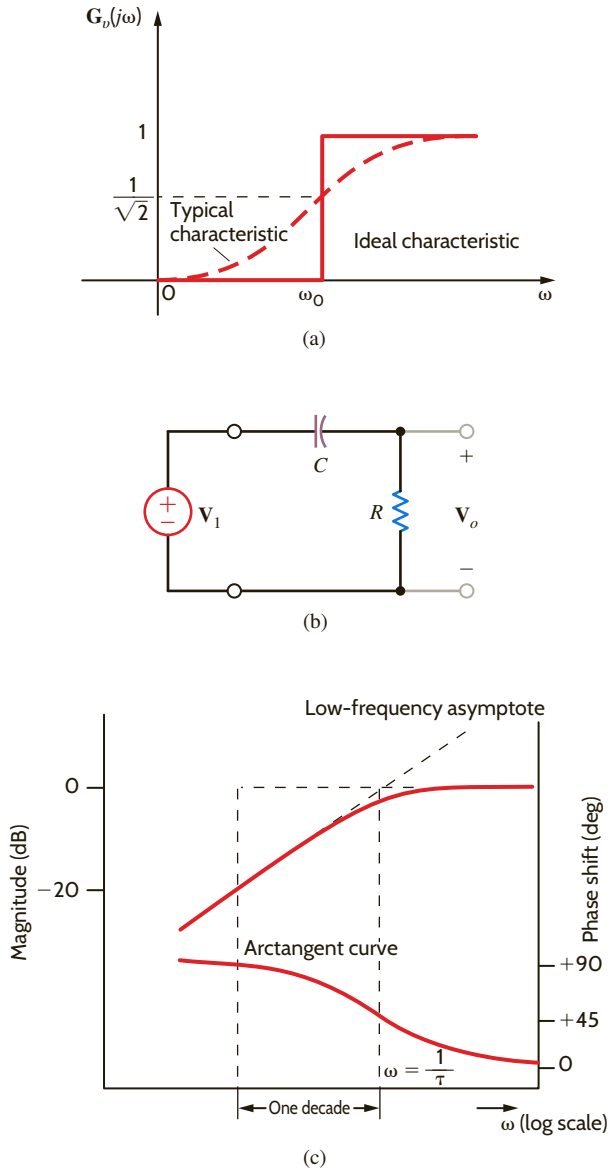

Figure 12.41

High-pass filter circuit and its frequency characteristics.

where once again $\tau = RC$. The magnitude of this function is

$$M(\omega) = \frac{\omega\tau}{[1 + (\omega\tau)^2]^{1/2}} \qquad \textbf{12.61}$$

and the phase is

$$\phi(\omega) = \frac{\pi}{2} - \tan^{-1}\omega\tau \qquad \textbf{12.62}$$

The half-power frequency is $\omega = 1/\tau$, and the phase at this frequency is 45°.

The magnitude and phase curves for this high-pass filter are shown in **Fig. 12.41c**. At low frequencies the magnitude curve has a slope of +20 dB/decade due to the term $\omega\tau$ in the numerator of Eq. (12.61). Then at the break frequency the curve begins to flatten out. The phase curve is derived from Eq. (12.62).

Ideal and typical amplitude characteristics for simple band-pass and band-rejection filters are shown in **Figs. 12.42a** and **b**, respectively. Simple networks that are capable of realizing the typical characteristics of each filter are shown below as characteristics in **Figs. 12.42c** and **d**. ω_0 is the center frequency of the pass or rejection band and the frequency at which the

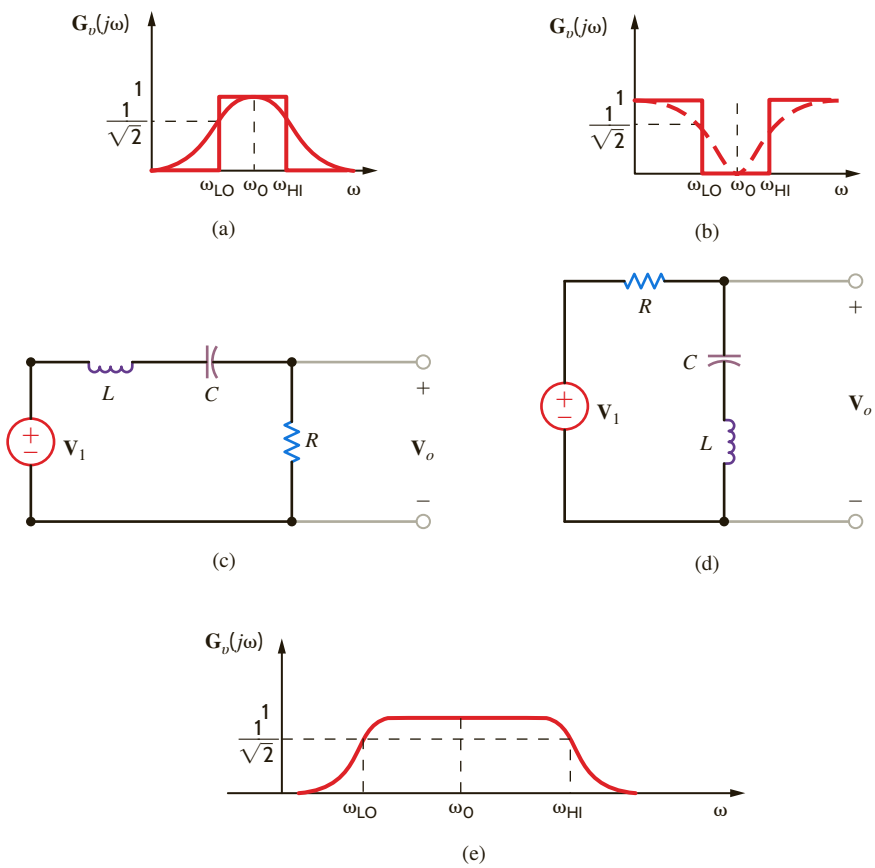

Figure 12.42
Band-pass and band-rejection filters and characteristics.

maximum or minimum amplitude occurs. ω_{LO} and ω_{HI} are the lower and upper break frequencies or *cutoff frequencies*, where the amplitude is $1/\sqrt{2}$ of the maximum value. The width of the pass or rejection band is called *bandwidth*, and hence

$$\mathrm{BW} = \omega_{HI} - \omega_{LO} \qquad \textbf{12.63}$$

To illustrate these points, let us consider the band-pass filter. The voltage transfer function is

$$\mathbf{G}_v(j\omega) = \frac{R}{R + j(\omega L - 1/\omega C)}$$

and, therefore, the amplitude characteristic is

$$M(\omega) = \frac{RC\omega}{\sqrt{(RC\omega)^2 + (\omega^2 LC - 1)^2}}$$

At low frequencies

$$M(\omega) \approx \frac{RC\omega}{1} \approx 0$$

At high frequencies

$$M(\omega) \approx \frac{RC\omega}{\omega^2 LC} \approx \frac{R}{\omega L} \approx 0$$

In the midfrequency range $(RC\omega)^2 \gg (\omega^2 LC - 1)^2$, and thus $M(\omega) \approx 1$. Therefore, the frequency characteristic for this filter is shown in **Fig. 12.42e**. The center frequency is $\omega_0 = 1/\sqrt{LC}$. At the lower cutoff frequency

$$\omega^2 LC - 1 = -RC\omega$$

or

$$\omega^2 + \frac{R\omega}{L} - \omega_0^2 = 0$$

Solving this expression for ω_{LO}, we obtain

$$\omega_{LO} = \frac{-(R/L) + \sqrt{(R/L)^2 + 4\omega_0^2}}{2}$$

At the upper cutoff frequency

$$\omega^2 LC - 1 = +RC\omega$$

or

$$\omega^2 - \frac{R}{L}\omega - \omega_0^2 = 0$$

Solving this expression for ω_{HI}, we obtain

$$\omega_{HI} = \frac{+(R/L) + \sqrt{(R/L)^2 + 4\omega_0^2}}{2}$$

Therefore, the bandwidth of the filter is

$$\text{BW} = \omega_{HI} - \omega_{LO} = \frac{R}{L}$$

EXAMPLE 12.18

Consider the frequency-dependent network in Fig. 12.43. Given the following circuit parameter values: $L = 159\ \mu\text{H}$, $C = 159\ \mu\text{F}$, and $R = 10\ \Omega$, let us demonstrate that this one network can be used to produce a low-pass, high-pass, or band-pass filter.

SOLUTION

The voltage gain $\mathbf{V}_R/\mathbf{V}_S$ is found by voltage division to be

$$\frac{\mathbf{V}_R}{\mathbf{V}_S} = \frac{R}{j\omega L + R + 1/(j\omega C)} = \frac{j\omega\left(\frac{R}{L}\right)}{(j\omega)^2 + j\omega\left(\frac{R}{L}\right) + \frac{1}{LC}}$$

$$= \frac{(62.9 \times 10^3)j\omega}{-\omega^2 + (62.9 \times 10^3)j\omega + 39.6 \times 10^6}$$

which is the transfer function for a band-pass filter. At resonance, $\omega^2 = 1/LC$, and hence

$$\frac{\mathbf{V}_R}{\mathbf{V}_S} = 1$$

Now consider the gain $\mathbf{V}_L/\mathbf{V}_S$:

$$\frac{\mathbf{V}_L}{\mathbf{V}_S} = \frac{j\omega L}{j\omega L + R + 1/(j\omega C)} = \frac{-\omega^2}{(j\omega)^2 + j\omega\left(\frac{R}{L}\right) + \frac{1}{LC}}$$

$$= \frac{-\omega^2}{-\omega^2 + (62.9 \times 10^3)j\omega + 39.6 \times 10^6}$$

which is a second-order high-pass filter transfer function. Again, at resonance,

$$\frac{\mathbf{V}_L}{\mathbf{V}_S} = \frac{j\omega L}{R} = jQ = j0.1$$

Similarly, the gain $\mathbf{V}_C/\mathbf{V}_S$ is

$$\frac{\mathbf{V}_C}{\mathbf{V}_S} = \frac{1/(j\omega C)}{j\omega L + R + 1/(j\omega C)} = \frac{\frac{1}{LC}}{(j\omega)^2 + j\omega\left(\frac{R}{L}\right) + \frac{1}{LC}}$$

$$= \frac{39.6 \times 10^6}{-\omega^2 + (62.9 \times 10^3)j\omega + 39.6 \times 10^6}$$

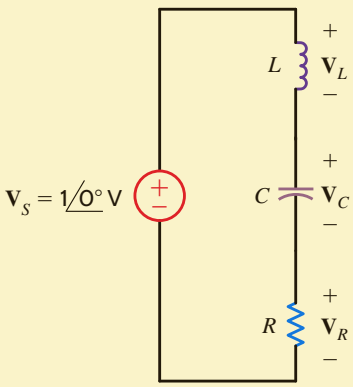

Figure 12.43
Circuit used in Example 12.18.

which is a second-order low-pass filter transfer function. At the resonant frequency,

$$\frac{\mathbf{V}_C}{\mathbf{V}_S} = \frac{1}{j\omega CR} = -jQ = -j0.1$$

Thus, one circuit produces three different filters depending on where the output is taken. This can be seen in the Bode plot for each of the three voltages in **Fig. 12.44**, where $\mathbf{V}_S$ is set to $1\underline{/0^\circ}$ V.

We know that Kirchhoff's voltage law must be satisfied at all times. Note from the Bode plot that $\mathbf{V}_R + \mathbf{V}_C + \mathbf{V}_L$ also equals $\mathbf{V}_S$ at all frequencies! Finally, let us demonstrate KVL by adding $\mathbf{V}_R$, $\mathbf{V}_L$, and $\mathbf{V}_C$:

$$\mathbf{V}_L + \mathbf{V}_R + \mathbf{V}_C = \frac{\left((j\omega)^2 + j\omega\left(\frac{R}{L}\right) + \frac{1}{\sqrt{LC}}\right)\mathbf{V}_S}{(j\omega)^2 + j\omega\left(\frac{R}{L}\right) + \frac{1}{\sqrt{LC}}} = \mathbf{V}_S$$

Thus, even though $\mathbf{V}_S$ is distributed between the resistor, capacitor, and inductor based on frequency, the sum of the three voltages completely reconstructs $\mathbf{V}_S$.

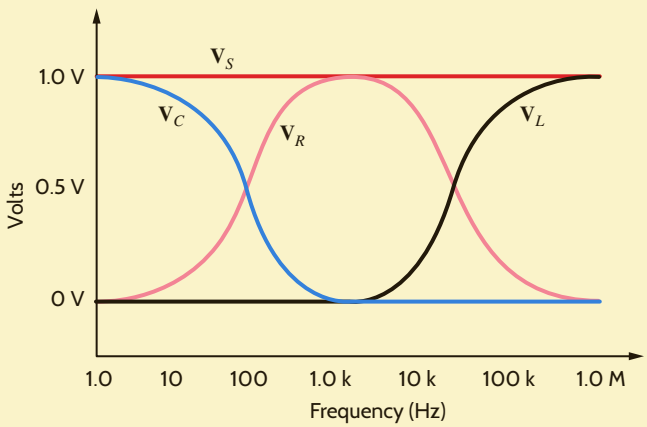

Figure 12.44
Bode plots for network in Fig. 12.43.

EXAMPLE 12.19

A telephone transmission system suffers from 60-Hz interference caused by nearby power utility lines. Let us use the network in **Fig. 12.45** to design a simple notch filter to eliminate the 60-Hz interference.

SOLUTION

The resistor R_{eq} represents the equivalent resistance of the telephone system to the right of the LC combination. The LC parallel combination has an equivalent impedance of

$$\mathbf{Z} = (j\omega L)//(1/j\omega C) = \frac{(L/C)}{j\omega L + 1/(j\omega C)}$$

Now the voltage transfer function is

$$\frac{\mathbf{V}_o}{\mathbf{V}_{in}} = \frac{R_{eq}}{R_{eq} + \mathbf{Z}} = \frac{R_{eq}}{R_{eq} + \dfrac{(L/C)}{j\omega L + (1/j\omega C)}}$$

which can be written

$$\frac{\mathbf{V}_o}{\mathbf{V}_{in}} = \frac{(j\omega)^2 + \dfrac{1}{LC}}{(j\omega)^2 + \left(\dfrac{j\omega}{R_{eq}C}\right) + \dfrac{1}{LC}}$$

Figure 12.45

Circuit used in Example 12.19.

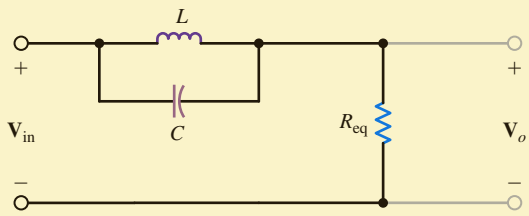

Note that at resonance, the numerator and thus $\mathbf{V}_o$ go to zero. We want resonance to occur at 60 Hz. Thus,

$$\omega_0 = \frac{1}{\sqrt{LC}} = 2\pi(60) = 120\pi$$

If we select $C = 100\ \mu\text{F}$, then the required value for L is 70.3 mH—both are reasonable values. To demonstrate the effectiveness of the filter, let the input voltage consist of a 60-Hz sinusoid and a 1000-Hz sinusoid of the form

$$v_{in}(t) = 1\sin[(2\pi)60t] + 0.2\sin[(2\pi)1000t]\ \text{V}$$

The input and output waveforms are both shown in **Fig. 12.46**. Note that the output voltage, as desired, contains none of the 60-Hz interference.

Figure 12.46

Transient analysis of the network in Fig. 12.45.

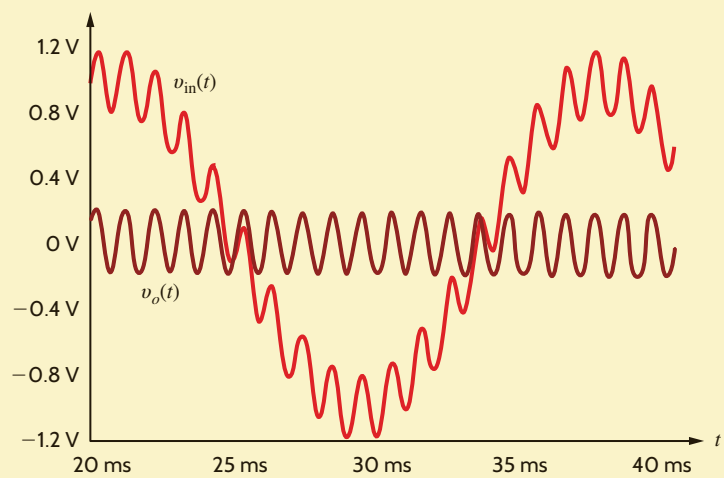

LEARNING ASSESSMENTS

E12.21 Given the filter network shown in Fig. E12.21, sketch the magnitude characteristic of the Bode plot for $\mathbf{G}_v(j\omega)$.

ANSWER:

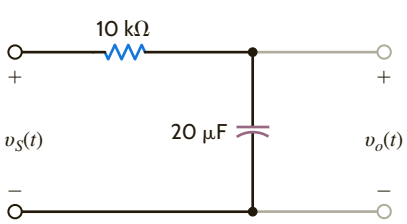

Figure E12.21

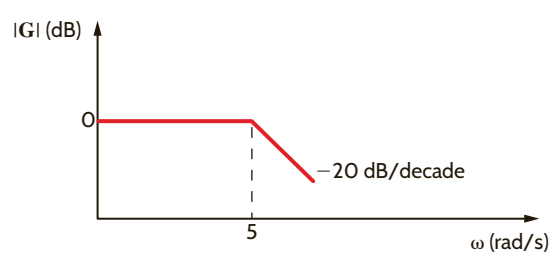

E12.22 Given the filter network in Fig. E12.22, sketch the magnitude characteristic of the Bode plot for $\mathbf{G}_v(j\omega)$.

ANSWER:

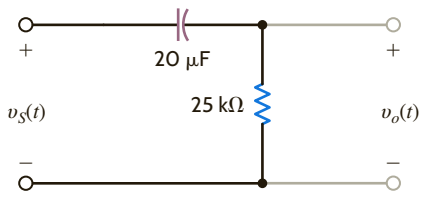

Figure E12.22

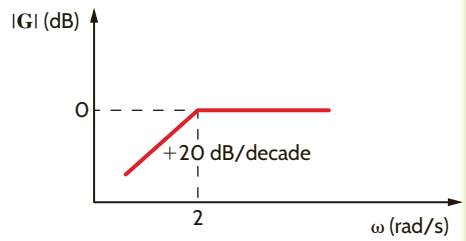

E12.23 A band-pass filter network is shown in Fig. E12.23. Sketch the magnitude characteristic of the Bode plot for $\mathbf{G}_v(j\omega)$.

ANSWER:

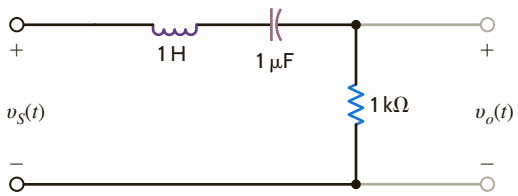

Figure E12.23

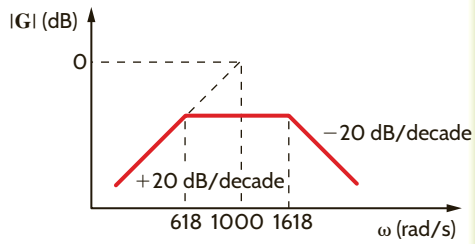

E12.24 Determine what type of filter the network shown in Fig. E12.24 represents by determining the voltage transfer function.

ANSWER:

$$\frac{s\left(\dfrac{L}{R_1}\right)}{s\left[\dfrac{(R_1 + R_2)L}{R_1R_2}\right]} + 1;$$ This is a high-pass filter.

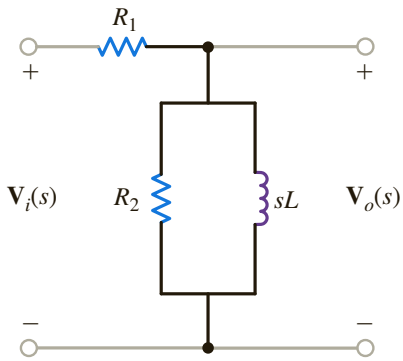

Figure E12.24

EXAMPLE 12.20

The ac-dc converter in **Fig. 12.47a** is designed for use with a hand-held calculator. Ideally, the circuit should convert a 120-V rms sinusoidal voltage to a 9-V dc output. In actuality, the output is

$$v_o(t) = 9 + 0.5 \sin 377t \text{ V}$$

Let us use a low-pass filter to reduce the 60-Hz component of $v_o(t)$.

SOLUTION

The Thévenin equivalent circuit for the converter is shown in **Fig. 12.47b**. By placing a capacitor across the output terminals, as shown in **Fig. 12.47c**, we create a low-pass filter at the output. The transfer function of the filtered converter is

$$\frac{\mathbf{V}_{\text{OF}}}{\mathbf{V}_{\text{Th}}} = \frac{1}{1 + sR_{\text{Th}}C}$$

which has a pole at a frequency of $f = 1/2\pi R_{Th}C$. To obtain significant attenuation at 60 Hz, we choose to place the pole at 6 Hz, yielding the equation

$$\frac{1}{2\pi R_{Th}C} = 6$$

or

$$C = 53.05\ \mu\text{F}$$

A transient simulation of the converter is used to verify performance.

Fig. 12.47d shows the output without filtering, $v_o(t)$, and with filtering, $v_{OF}(t)$. The filter has successfully reduced the unwanted 60-Hz component by a factor of roughly six.

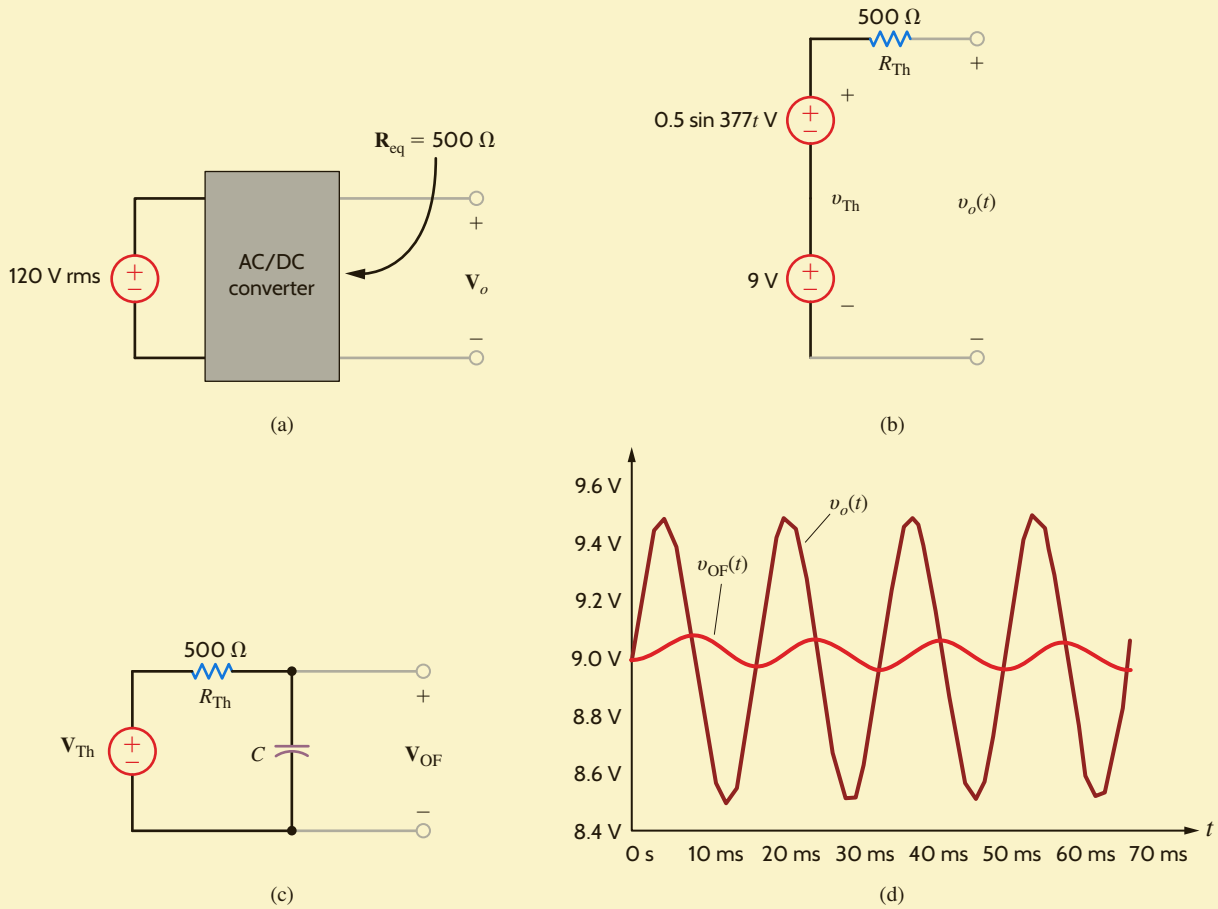

Figure 12.47

Circuits and output plots for ac/dc converter.

EXAMPLE 12.21

The antenna of an FM radio picks up stations across the entire FM frequency range—approximately 87.5 MHz to 108 MHz. The radio's circuitry must have the capability to first reject all of the stations except the one that the listener wants to hear and then to boost the minute antenna signal. A tuned amplifier incorporating parallel resonance can perform both tasks simultaneously.

The network in **Fig. 12.48a** is a circuit model for a single-stage tuned transistor amplifier where the resistor, capacitor, and inductor are discrete elements. Let us find the transfer function $\mathbf{V}_o(s)/\mathbf{V}_A(s)$, where $\mathbf{V}_A(s)$ is the antenna voltage and the value of C for maximum gain at 91.1 MHz. Finally, we will simulate the results.

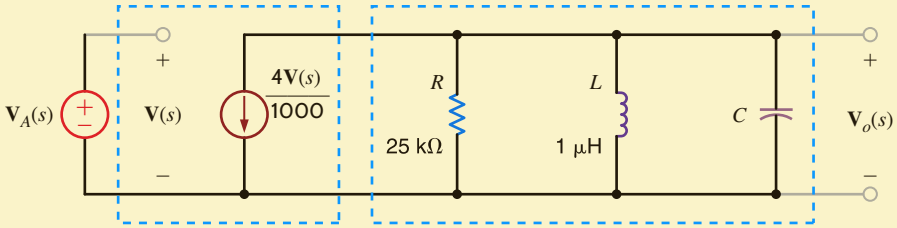

(a)

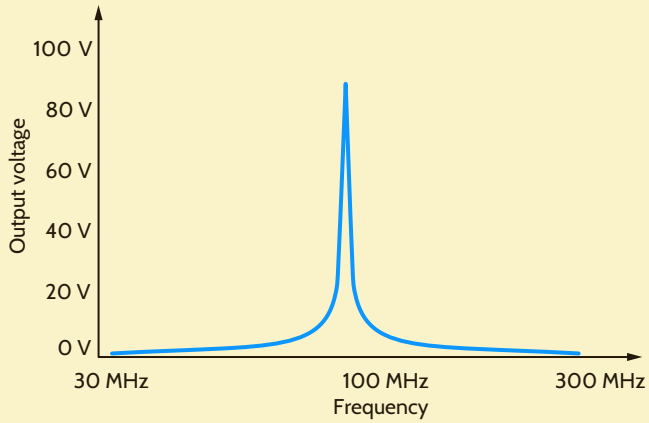

(b)

Figure 12.48
Circuit and Bode plot for the parallel resonant tuned amplifier.

SOLUTION

Since $\mathbf{V}(s) = \mathbf{V}_A(s)$, the transfer function is

$$\frac{\mathbf{V}_o(s)}{\mathbf{V}_A(s)} = -\frac{4}{1000}\left[R//sL//\frac{1}{sC}\right]$$

$$\frac{\mathbf{V}_o(s)}{\mathbf{V}_A(s)} = -\frac{4}{1000}\left[\frac{s/C}{s^2 + \frac{s}{RC} + \frac{1}{LC}}\right]$$

The parallel resonant network is actually a band-pass filter. Maximum gain occurs at the center frequency, f_0. This condition corresponds to a minimum value in the denominator. Isolating the denominator polynomial, $D(s)$, and letting $s = j\omega$, we have

$$\mathbf{D}(j\omega) = \frac{1}{LC} - \omega^2 + \frac{j\omega}{RC}$$

which has a minimum value when the real part goes to zero, or

$$\frac{1}{LC} - \omega_0^2 = 0$$

yielding a center frequency of

$$\omega_0 = \frac{1}{\sqrt{LC}}$$

Thus, for a center frequency of 91.1 MHz, we have

$$2\pi(91.1 \times 10^6) = \frac{1}{\sqrt{LC}}$$

and the required capacitor value is

$$C = 3.05 \text{ pF}$$

The Bode plot for the tuned amplifier, as shown in **Fig. 12.48b**, confirms the design, since the center frequency is 91.1 MHz, as specified.

EXAMPLE 12.22

The circuit in Fig. 12.49a is called a notch filter. From a sketch of its Bode plot in Fig. 12.49b, we see that at the notch frequency, f_n, the transfer function gain is zero, while at frequencies above and below f_n the gain is unity. Let us design a notch filter to remove an annoying 60-Hz hum from the output voltage of a cassette tape player and generate its Bode plot.

SOLUTION

Fig. 12.49c shows a block diagram for the filter implementation. The tape output contains both the desired music and the undesired hum. After filtering, the voltage $\mathbf{V}_{\text{amp}}$ will have no 60-Hz component as well as some attenuation at frequencies around 60 Hz. An equivalent circuit for the block diagram including a Thévenin equivalent for the tape deck and an equivalent resistance for the power amp is shown in Fig. 12.49d. Applying voltage division, we find the transfer function to be

$$\frac{\mathbf{V}_{\text{amp}}}{\mathbf{V}_{\text{tape}}} = \frac{R_{\text{amp}}}{R_{\text{amp}} + R_{\text{tape}} + \left(sL // \frac{1}{Cs}\right)}$$

After some manipulation, the transfer function can be written as

$$\frac{\mathbf{V}_{\text{amp}}}{\mathbf{V}_{\text{tape}}} = \frac{R_{\text{amp}}}{R_{\text{amp}} + R_{\text{tape}}}\left[\frac{s^2LC + 1}{s^2LC + s\left(\frac{L}{R_{\text{tape}} + R_{\text{amp}}}\right) + 1}\right]$$

We see that the transfer function contains two zeros and two poles. Letting $s = j\omega$, the zero frequencies, ω_z, are found to be at

$$\omega_z = \pm\frac{1}{\sqrt{LC}}$$

Obviously, we would like the zero frequencies to be at 60 Hz. If we arbitrarily choose $C = 10\ \mu\text{F}$, then $L = 0.704$ H.

The Bode plot, shown in Fig. 12.49e, confirms that there is indeed zero transmission at 60 Hz.

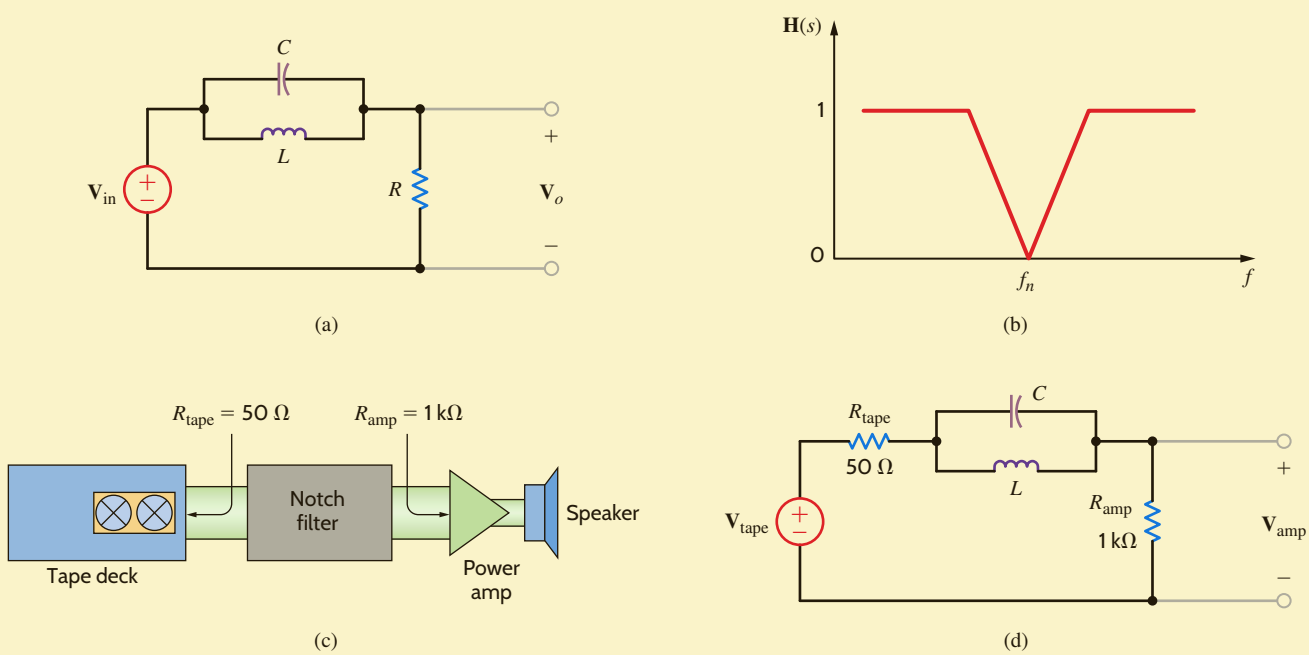

Figure 12.49

Circuits and Bode plots for 60-Hz notch filter.

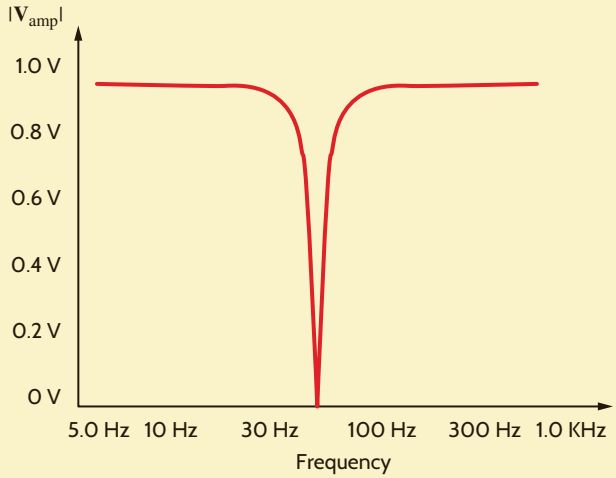

(e)

Figure 12.49
(continued)

EXAMPLE 12.23

A fast-growing field within electrical engineering is mixed-mode circuitry, which combines digital and analog networks to create a larger system. A key component in these systems is the analog-to-digital converter, or ADC. It "measures" an analog voltage and converts it to a digital representation. If these conversions are done quickly enough, the result is a sequence of data points, as shown in **Fig. 12.50a**. Connecting the dots reveals the original analog signal, $v_A(t)$. Unfortunately, as seen in **Fig. 12.50b**, undesired signals such as $v_B(t)$ at higher frequencies can also have the same set of data points. This phenomenon is called aliasing and can be avoided by employing a low-pass filter, called an anti-aliasing filter, before the ADC as shown in **Fig. 12.50c**. In general, the half-power frequency of the filter should be greater than the frequency of the signals you wish to convert but less than those you want to reject.

We wish to design an anti-aliasing filter, with a half-power frequency at 100 Hz, that will permit us to acquire a 60-Hz signal. In this design we will assume the ADC has infinite input resistance.

SOLUTION

Assuming the ADC has infinite input resistance, we find that the transfer function for the filter is quite simple:

$$\frac{\mathbf{V}_o}{\mathbf{V}_{\text{in}}} = \frac{\dfrac{1}{j\omega C}}{R + \dfrac{1}{j\omega C}} = \frac{1}{1 + j\omega RC}$$

The half-power frequency is

$$f_P = \frac{1}{2\pi RC} = 100 \text{ Hz}$$

If we somewhat arbitrarily choose C at 100 nF, a little larger than the resistor but smaller than the ADC integrated circuit in size, the resulting resistor value is 15.9 kΩ.

Figure 12.50

A brief explanation of ADC basics. (a) The ADC samples are like data points on the acquired waveform. (b) Higher-frequency signals can have the same data points. After acquisition, it appears that $v_B(t)$ has been shifted to a lower frequency, an effect called aliasing. (c) The solution, an anti-aliasing low-pass filter.

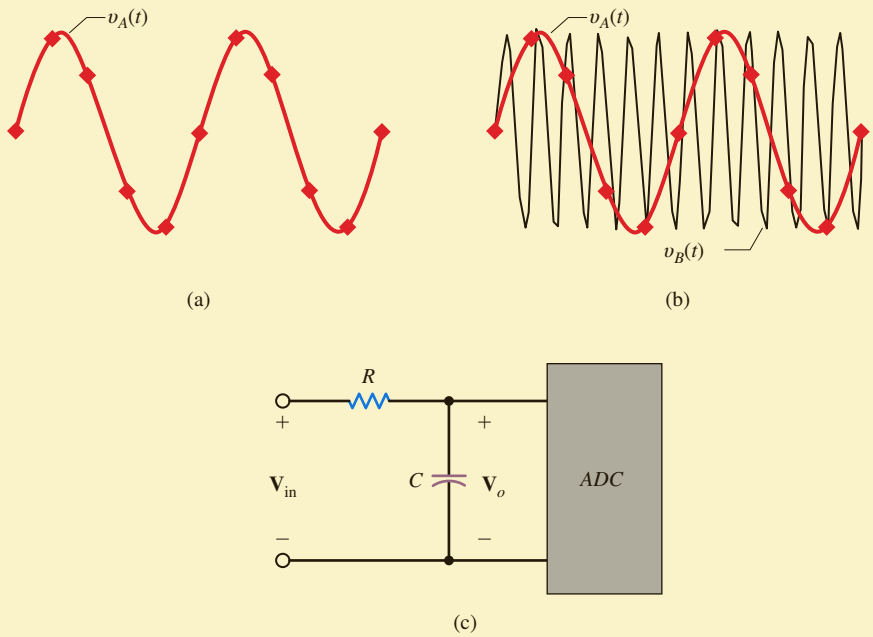

SUMMARY

- There are four types of network or transfer functions:
  1. $\mathbf{Z}(j\omega)$: the ratio of the input voltage to the input current
  2. $\mathbf{Y}(j\omega)$: the ratio of the output current to the input voltage
  3. $\mathbf{G}_v(j\omega)$: the ratio of the output voltage to the input voltage
  4. $\mathbf{G}_i(j\omega)$: the ratio of the output current to the input current
- Driving point functions are impedances or admittances defined at a single pair of terminals, such as the input impedance of a network.
- When the network function is expressed in the form

$$\mathbf{H}(s) = \frac{N(s)}{D(s)}$$

  the roots of $N(s)$ cause $\mathbf{H}(s)$ to become zero and are called zeros of the function, and the roots of $D(s)$ cause $\mathbf{H}(s)$ to become infinite and are called poles of the function.
- Bode plots are semilog plots of the magnitude and phase of a transfer function as a function of frequency. Straight-line approximations can be used to sketch quickly the magnitude characteristic. The error between the actual characteristic and the straight-line approximation can be calculated when necessary.
- The resonant frequency, given by the expression

$$\omega_0 = \frac{1}{\sqrt{LC}}$$

  is the frequency at which the impedance of a series *RLC* circuit or the admittance of a parallel *RLC* circuit is purely real.
- The quality factor is a measure of the sharpness of the resonant peak. A higher Q yields a sharper peak.

  For series *RLC* circuits, $Q = (1/R)\sqrt{L/C}$. For parallel *RLC* circuits, $Q = R\sqrt{C/L}$.
- The half-power, cutoff, or break frequencies are the frequencies at which the magnitude characteristic of the Bode plot is $1/\sqrt{2}$ of its maximum value.
- The parameter values for passive circuit elements can be both magnitude and frequency scaled.
- The four common types of filters are low-pass, high-pass, band-pass, and band-rejection.
- The bandwidth of a band-pass or band-rejection filter is the difference in frequency between the half-power points; that is,

$$\text{BW} = \omega_{\text{HI}} - \omega_{\text{LO}}$$

  For a series *RLC* circuit, $\text{BW} = R/L$. For a parallel *RLC* circuit, $\text{BW} = 1/RC$.

PROBLEMS

12.1 Determine the driving point impedance at the input terminals of the network shown in Fig. P12.1 as a function of s.

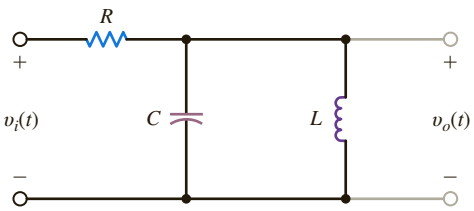

Figure P12.1

12.2 Determine the driving point impedance at the input terminals of the network shown in Fig. P12.2 as a function of s.

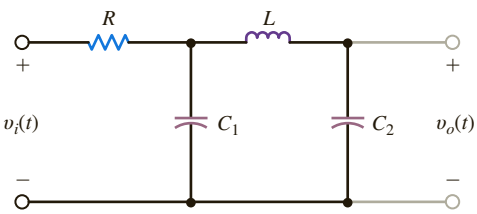

Figure P12.2

12.3 Determine the voltage transfer function $\mathbf{V}_o(s)/\mathbf{V}_i(s)$ as a function of s for the network shown in Fig. P12.3.

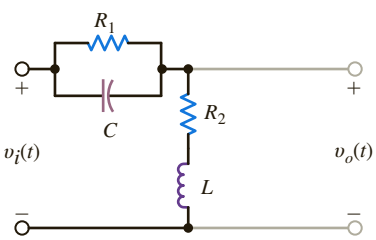

Figure P12.3

12.4 Find the transfer impedance $\mathbf{V}_o(s)/\mathbf{I}_s(s)$ for the network shown in Fig. P12.4.

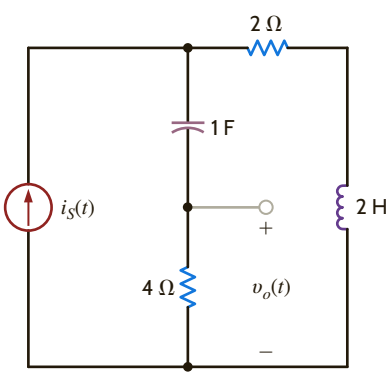

Figure P12.4

12.5 Determine the driving-point impedance at the input terminals of the network shown in Fig. P12.5 as a function of s.

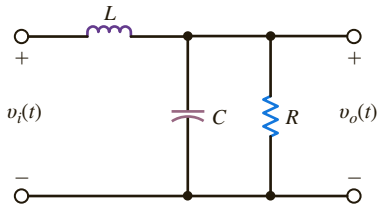

Figure P12.5

12.6 Compute the voltage transfer function as a function of s for the network in Problem 12.5.

12.7 Find the driving point impedance at the input terminals of the circuit in Fig. P12.7 as a function of s.

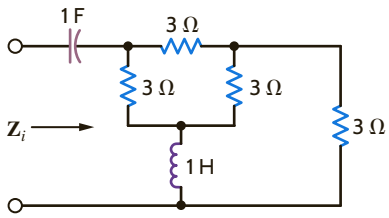

Figure P12.7

12.8 Determine the driving point impedance at the input terminals 1–2 for the network shown in Fig. P12.8 as a function of s if (a) terminals 3–4 are open and (b) terminals 3–4 are shorted.

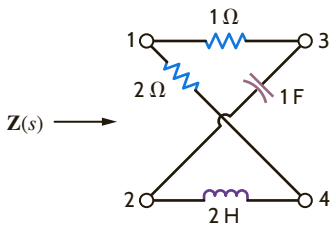

Figure P12.8

12.9 Sketch the magnitude and phase characteristics as a function of the frequency of the network functions defined by each transfer function.

(a) $\dfrac{1}{j\omega + \alpha}$

(b) $\dfrac{j\omega + \alpha}{j\omega + \beta}$, $\alpha > \beta$

(c) $\dfrac{j\omega}{j\omega + \alpha}$

12.10 Given the network functions defined by each transfer function, sketch their magnitude and phase characteristics as a function of frequency.

(a) $\dfrac{j\omega - \alpha}{j\omega + \alpha}$

(b) $\dfrac{j\omega + \alpha}{j\omega + \beta}$, $\beta > \alpha$

12.11 Draw the Bode plot for the network function

$$\mathbf{H}(j\omega) = \frac{j\omega 4 + 1}{j\omega 20 + 1}$$

12.12 Draw the Bode plot for the network function

$$\mathbf{H}(j\omega) = \frac{1}{(j\omega + 5)(j\omega + 10)}$$

12.13 Draw the Bode plot for the network function

$$\mathbf{H}(j\omega) = \frac{10j\omega + 1}{j\omega(0.01j\omega + 1)}$$

12.14 Draw the Bode plot for the network function

$$\mathbf{H}(j\omega) = \frac{j\omega + 40}{(j\omega + 1)(j\omega + 2)}$$

12.15 Draw the Bode plot for the network function

$$\mathbf{H}(j\omega) = \frac{(j\omega + 8)(j\omega + 2)}{-\omega^2}$$

12.16 Sketch the magnitude characteristic of the Bode plot for the transfer function

$$\mathbf{G}(j\omega) = \frac{400(j\omega + 2)(j\omega + 50)}{-\omega^2\,(j\omega + 100)^2}$$

12.17 Sketch the magnitude characteristic of the Bode plot for the transfer function

$$\mathbf{G}(j\omega) = \frac{-\omega^2\,10^4}{(j\omega + 1)(j\omega + 10)(j\omega + 100)}$$

12.18 Sketch the magnitude characteristic of the Bode plot for the transfer function

$$\mathbf{G}(j\omega) = \frac{(j\omega + 4)^2}{-\omega^2\left(\frac{j\omega}{10} + 1\right)\left(\frac{j\omega}{20} + 1\right)}$$

12.19 Draw the Bode plot for the network function

$$\mathbf{H}(j\omega) = \frac{j\omega}{(j\omega + 1)(0.1j\omega + 1)}$$

12.20 Sketch the magnitude characteristic of the Bode plot for the transfer function

$$\mathbf{H}(j\omega) = \frac{100(j\omega)}{(j\omega + 1)(j\omega + 10)(j\omega + 50)}$$

12.21 Sketch the magnitude characteristic of the Bode plot for the transfer function

$$\mathbf{H}(j\omega) = \frac{20(0.1j\omega + 1)}{j\omega(j\omega + 1)(0.01j\omega + 1)}$$

12.22 Draw the Bode plot for the network function

$$\mathbf{H}(j\omega) = \frac{100}{(j\omega)^2(j\omega^2 + 1)}$$

12.23 Sketch the magnitude characteristic of the Bode plot for the transfer function

$$\mathbf{G}(j\omega) = \frac{-\omega^2}{(j\omega + 1)^3}$$

12.24 Sketch the magnitude characteristic of the Bode plot for the transfer function

$$\mathbf{G}(j\omega) = \frac{10(j\omega + 2)(j\omega + 100)}{j\omega(-\omega^2 + 4j\omega + 100)}$$

12.25 Sketch the magnitude characteristic of the Bode plot for the transfer function

$$\mathbf{G}(j\omega) = \frac{10j\omega}{(j\omega + 1)(j\omega + 10)^2}$$

12.26 Sketch the magnitude characteristic of the Bode plot for the transfer function

$$\mathbf{G}(j\omega) = \frac{-\omega^2 10^4}{(j\omega + 1)^2(j\omega + 10)(j\omega + 100)^2}$$

12.27 Sketch the magnitude characteristic of the Bode plot for the transfer function

$$\mathbf{H}(j\omega) = \frac{+6.4}{(j\omega + 1)(-\omega^2 + 8j\omega + 16)}$$

12.28 Sketch the magnitude characteristic of the Bode plot for the transfer function

$$\mathbf{H}(j\omega) = \frac{0.5(10j\omega + 1)(j\omega + 1)}{j\omega(0.1j\omega + 1)(0.01j\omega + 1)^2}$$

12.29 Sketch the magnitude characteristic of the Bode plot for the transfer function

$$\mathbf{H}(j\omega) = \frac{+81(j\omega + 0.1)}{(j\omega)(-\omega^2 + 3.6j\omega + 81)}$$

12.30 Sketch the magnitude characteristic of the Bode plot for the transfer function

$$\mathbf{H}(j\omega) = \frac{+6.4(j\omega)}{(j\omega + 1)(-\omega^2 + 8j\omega + 64)}$$

12.31 Find $\mathbf{H}(j\omega)$ for the magnitude characteristic shown in Fig. P12.31.

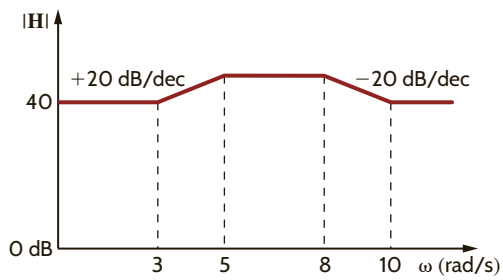

Figure P12.31

12.32 Find $\mathbf{H}(j\omega)$ for the magnitude characteristic shown in Fig. P12.32.

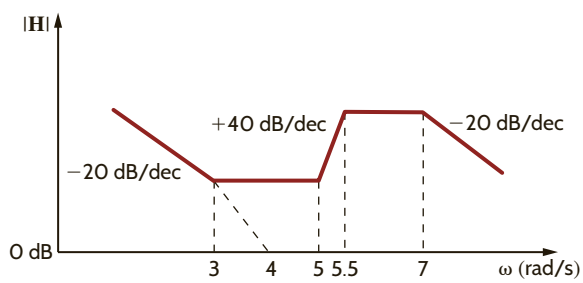

Figure P12.32

12.33 Determine $\mathbf{H}(j\omega)$ for the magnitude characteristic shown in Fig. P12.33.

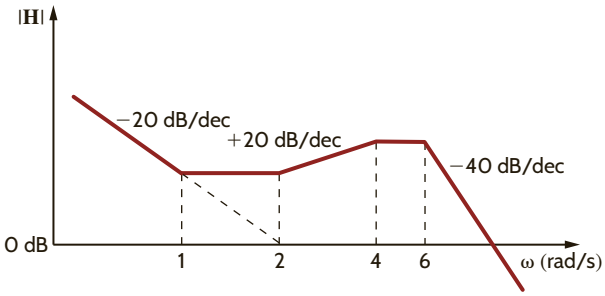

Figure P12.33

12.34 Given the magnitude characteristic for $\mathbf{G}(j\omega)$ shown in Fig. P.12.34, determine the transfer function $\mathbf{G}(j\omega)$.

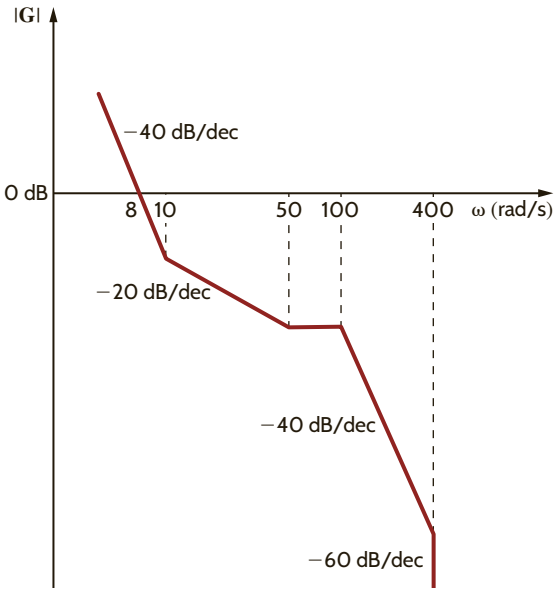

Figure P12.34

12.35 The magnitude characteristic of a band-elimination filter is shown in Fig. P12.35. Determine $\mathbf{H}(j\omega)$.

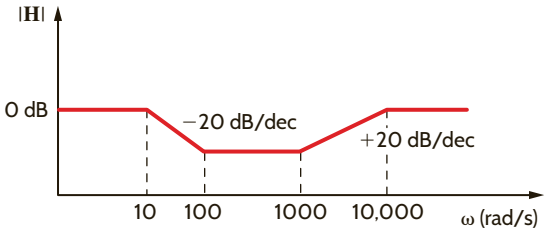

Figure P12.35

12.36 Given the magnitude characteristic in Fig. P12.36, find $\mathbf{H}(j\omega)$.

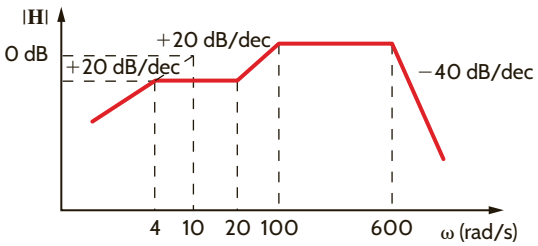

Figure P12.36

12.37 Find $\mathbf{H}(j\omega)$ if its magnitude characteristic is shown in Fig. P12.37.

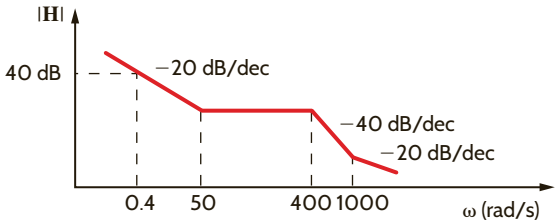

Figure P12.37

12.38 Find $\mathbf{H}(j\omega)$ if its amplitude characteristic is shown in Fig. P12.38.

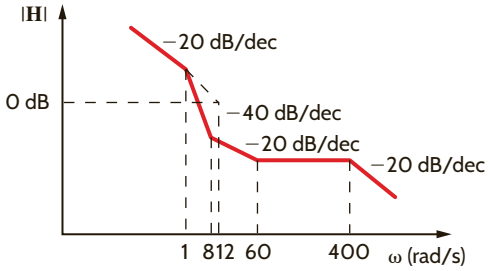

Figure P12.38

12.39 Determine $\mathbf{H}(j\omega)$ if its magnitude characteristic is shown in Fig. P12.39.

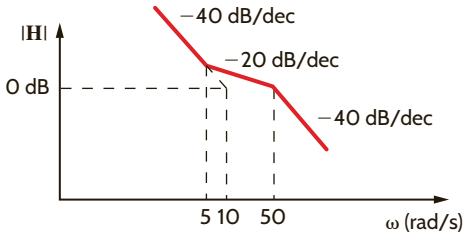

Figure P12.39

12.40 Find $\mathbf{G}(j\omega)$ for the magnitude characteristic shown in Fig. P12.40.

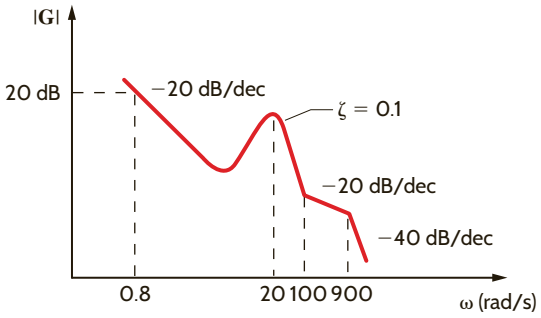

Figure P12.40

12.41 The series *RLC* circuit in Fig. P12.41 is driven by a variable-frequency source. If the resonant frequency of the network is selected as $\omega_0 = 1600$ rad/s, find the value of C. In addition, compute the current at resonance and at $\omega_0/4$ and $4\omega_0$.

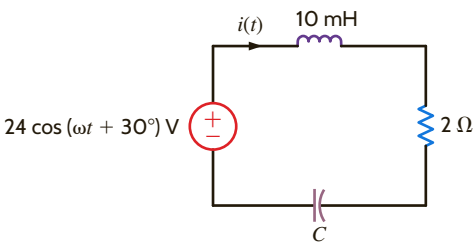

Figure P12.41

12.42 Find $\mathbf{H}(j\omega)$ if its magnitude characteristic is shown in Fig. P12.42.

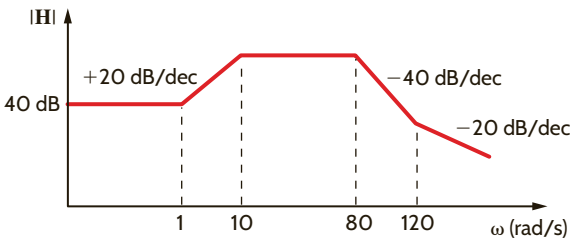

Figure P12.42

12.43 Determine $\mathbf{H}(j\omega)$ from the magnitude characteristic of the Bode plot shown in Fig. P12.43.

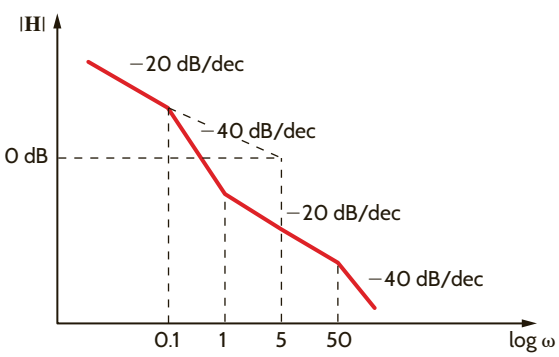

Figure P12.43

12.44 Given the *RLC* network in Fig. P12.44, find the value of Q and the output voltage, $v_o(t)$, at the resonant frequency.

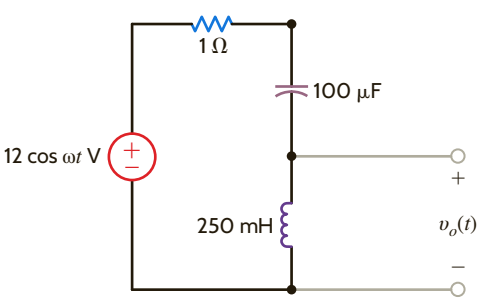

Figure P12.44

12.45 Given the series *RLC* circuit in Fig. P12.45, (a) derive the expression for the half-power frequencies, the resonant frequency, the bandwidth, and the quality factor for the transfer characteristic $\mathbf{I}/\mathbf{V}_{in}$ in terms of R, L, and C; (b) compute the quantities in part (a) if $R = 10\ \Omega$, $L = 50$ mH, and $C = 10\ \mu$F.

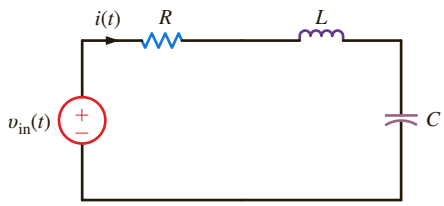

Figure P12.45

12.46 Given the network in Fig. P12.46, find ω_0, Q, ω_{max}, and $|\mathbf{V}_o|_{max}$.

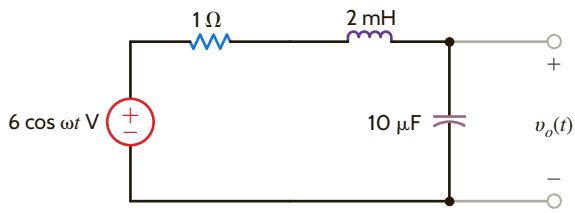

Figure P12.46

12.47 A series *RLC* circuit resonates at 1000 rad/s. If $C = 20\ \mu$F, and it is known that the impedance at resonance is 2.4 Ω, compute the value of L, the Q of the circuit, and the bandwidth.

12.48 A series resonant circuit has a Q of 120 and a resonant frequency of 10,000 rad/s. Determine the half-power frequencies and the bandwidth of the circuit.

12.49 In the network in Fig. P12.49, the inductor value is 10 mH, and the circuit is driven by a variable-frequency source. If the magnitude of the current at resonance is 12 A, $\omega_0 =$ 1000 rad/s, and $L = 10$ mH, find C, Q, and the bandwidth of the circuit.

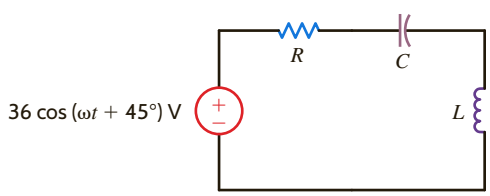

Figure P12.49

12.50 A parallel *RLC* resonant circuit with a resonant frequency of 20,000 rad/s has an admittance at resonance of 1 mS. If the capacitance of the network is 2 μF, find the values of R and L.

12.51 A parallel *RLC* circuit, which is driven by a variable frequency 2-A current source, has the following values: $R = 1$ kΩ, $L = 400$ mH, and $C = 10\ \mu$F. Find the bandwidth of the network, the half-power frequencies, and the voltage across the network at the half-power frequencies.

12.52 A variable-frequency voltage source drives the network in Fig. P12.52. Determine the resonant frequency, Q, BW, and the average power dissipated by the network at resonance.

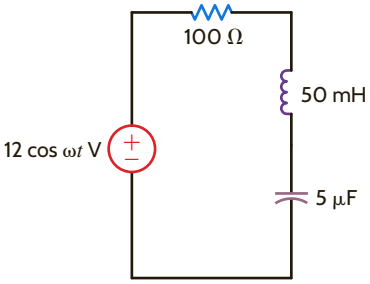

Figure P12.52

12.53 The network in Fig. P12.53 operates at 200 Hz. Determine the manner in which the resistor bank should be connected to maximize the voltage $\mathbf{V}_o$ and determine the value of the maximum voltage ($R_1 = 12\ \Omega$, $R_2 = 6\ \Omega$, $R_3 = 4\ \Omega$).

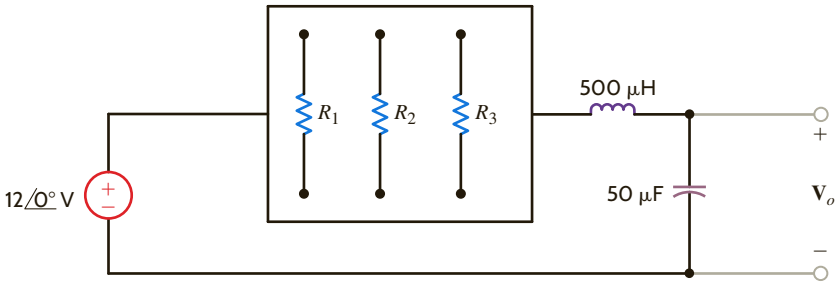

Figure P12.53

12.54 A series *RLC* circuit is driven by a signal generator. The resonant frequency of the network is known to be 1600 rad/s and at that frequency the impedance seen by the signal generator is 5 Ω. If $C = 20\ \mu$F, find L, Q, and the bandwidth.

12.55 The network in Fig. P12.55 operates at a resonant frequency of $\omega = 2000$ rad/s. Select the values for the unknown circuit elements so that the circuit has a $Q = 40$. Then find the value of the voltage across the capacitor.

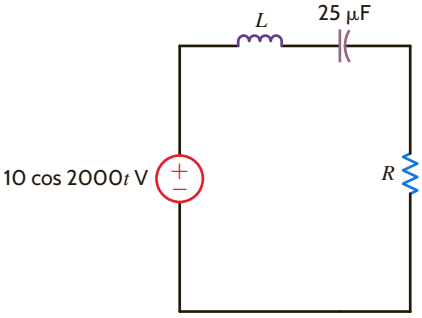

Figure P12.55

12.56 The network in Fig. P12.56 operates at a resonant frequency of 7200 rad/s. If the $Q = 60$, find the values of the inductor and capacitor.

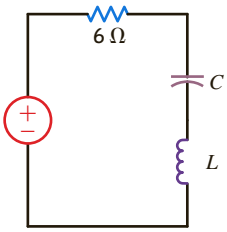

Figure P12.56

12.57 Given the circuit in Fig. P12.57, determine the Q of the network and calculate the phasor voltage $\mathbf{V}_0$ as well as the voltage across each element in the network.

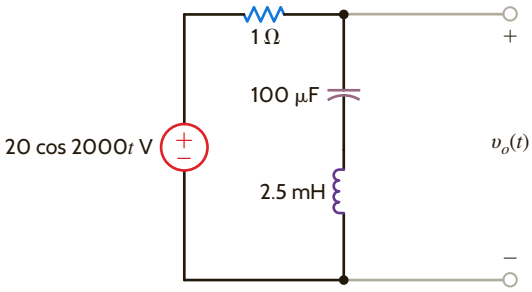

Figure P12.57

12.58 A series *RLC* circuit is required to have a resonant frequency of 1 MHz and a bandwidth that is 2% of the resonant frequency. If $R = 100\ \Omega$, find the values for L and C.

12.59 Determine the expression for the frequency at which the input impedance of the network shown in Fig. P12.59 is real.

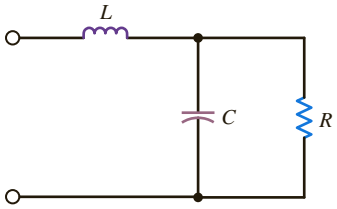

Figure P12.59

12.60 Consider the network in Fig. P12.60. If $R = 1\ \text{k}\Omega$, $L = 20$ mH, $C = 50\ \mu\text{F}$, and $R_S = \infty$, determine the resonant frequency ω_0, the Q of the network, and the bandwidth of the network. What impact does an R_S of 10 kΩ have on the quantities determined?

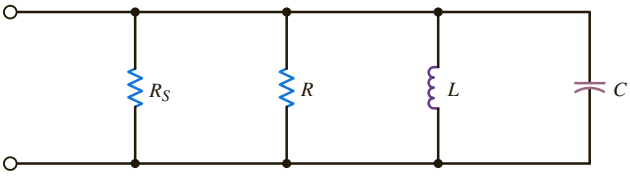

Figure P12.60

12.61 Determine the equation for the nonzero resonant frequency of the impedance shown in Fig. P12.61.

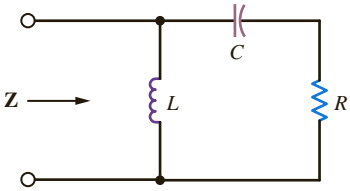

Figure P12.61

12.62 Given the network in Fig. P12.62, find the frequency ω_M at which the magnitude of impedance $\mathbf{Z}(j\omega)$ is a maximum. In addition, determine the phase of the impedance at the frequency ω_M.

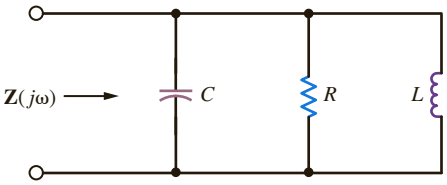

Figure P12.62

12.63 A parallel *RLC* resonant circuit has a resistance of 200 Ω. If it is known that the bandwidth is 80 rad/s and the lower half-power frequency is 800 rad/s, find the values of the parameters L and C.

12.64 A parallel *RLC* circuit, which is driven by a variable-frequency 4-A current source, has the following values: $R = 2\ \text{k}\Omega$, $L = 100$ mH, and $C = 10\ \mu\text{F}$. Find the bandwidth of the network, the half-power frequencies, and the voltage across the network at the half-power frequencies.

12.65 Determine the parameters of a parallel resonant circuit that has the following properties: $\omega_0 = 2$ Mrad/s, BW = 20 rad/s, and an impedance at resonance of 2000 Ω.

12.66 Determine the value of C in the network shown in Fig. P12.66 for the circuit to be in resonance.

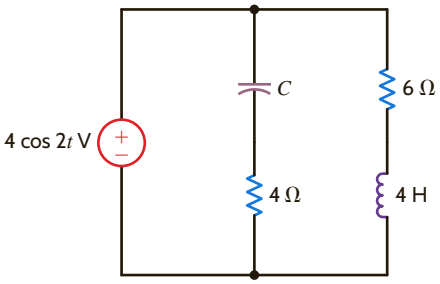

Figure P12.66

12.67 The source in the network in Fig. P12.67 is $i_S(t) = \cos 1000t + \cos 1500t$ A. $R = 200\ \Omega$ and $C = 500\ \mu\text{F}$. If $\omega_0 = 1000$ rad/s, find L, Q, and the BW. Compute the output voltage $v_o(t)$ and discuss the magnitude of the output voltage at the two input frequencies.

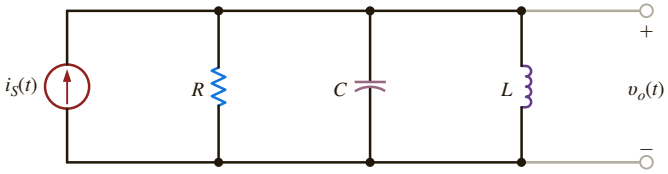

Figure P12.67

12.68 Determine the new parameters of the network in Fig. P12.68 if $\omega_{\text{new}} = 10^4\omega_{\text{old}}$.

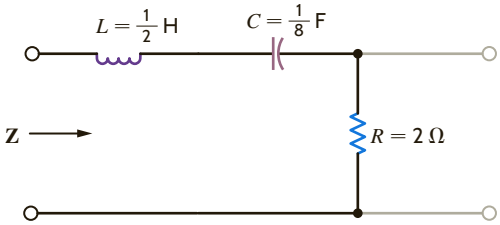

Figure P12.68

12.69 Determine the new parameters of the network shown in Fig. P12.69 if $\mathbf{Z}_{\text{new}} = 10^4\mathbf{Z}_{\text{old}}$.

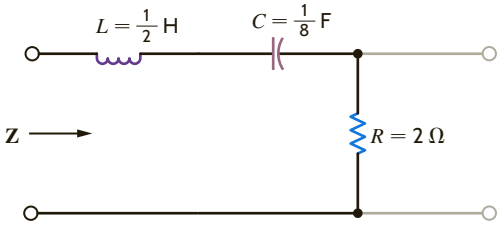

Figure P12.69

12.70 Compute the voltage transfer function for the network shown in Fig. P12.70 and tell what type of filter the network represents.

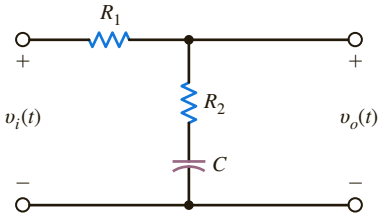

Figure P12.70

12.71 Determine what type of filter the network shown in Fig. P12.71 represents by determining the voltage transfer function.

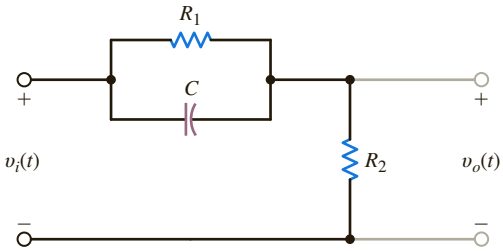

Figure P12.71

12.72 Given the network in Fig. P12.72, sketch the magnitude characteristic of the transfer function

$$\mathbf{G}_v(j\omega) = \frac{\mathbf{V}_0}{\mathbf{V}_1}(j\omega)$$

Identify the type of filter.

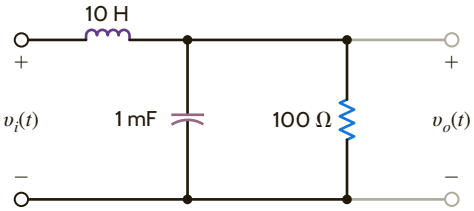

Figure P12.72

12.73 Determine what type of filter the network shown in Fig. P12.73 represents by determining the voltage transfer function.

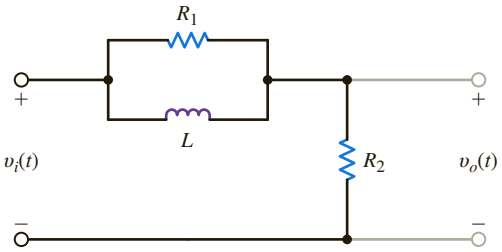

Figure P12.73

12.74 Given the network in Fig. P12.74, sketch the magnitude characteristic of the transfer function

$$\mathbf{G}_v(j\omega) = \frac{\mathbf{V}_o}{\mathbf{V}_1}(j\omega)$$

Identify the type of filter.

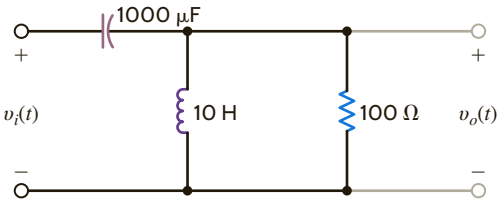

Figure P12.74

12.75 Given the lattice network shown in Fig. P12.75, determine what type of filter this network represents by determining the voltage transfer function.

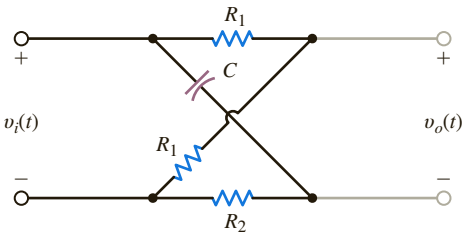

Figure P12.75

12.76 The circuit in Fig. P12.76 is a dual-T notch filter. It has an advantage over the filter in Example 12.21 in that it contains no inductors, which tend to be bulky and heavy. Derive the transfer function for this filter and verify your work for the component values $C = 100$ nF and $R = 1590\ \Omega$.

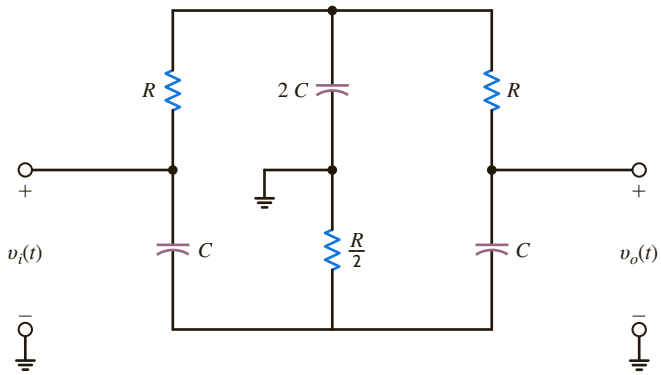

Figure P12.76

12.77 Design a low-pass filter with a cutoff frequency between 15 and 16 kHz.

12.78 Design a low-pass filter using one resistor and one capacitor that will produce a 4.24-volt output at 159 Hz when 6 volts at 159 Hz are applied at the input.

12.79 Design a high-pass filter with a half-power frequency between 159 and 161 kHz.

12.80 Design a band-pass filter with a low cutoff frequency of approximately 4535 Hz and a high cutoff frequency of approximately 5535 Hz.

12.81 An engineer has proposed the circuit shown in Fig. P12.81 to filter out high-frequency noise. Determine the values of the capacitor and resistor to achieve a 3-dB voltage drop at 23.16 kHz.

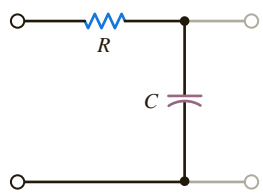

Figure P12.81

TYPICAL PROBLEMS FOUND ON THE FE EXAM

12PFE-1 Determine the voltage $\mathbf{V}_0$ at resonance in the circuit in Fig. 12PFE-1.

a. $60\angle -90°$ V
b. $35\angle 60°$ V
c. $40\angle -60°$ V
d. $30\angle 45°$ V

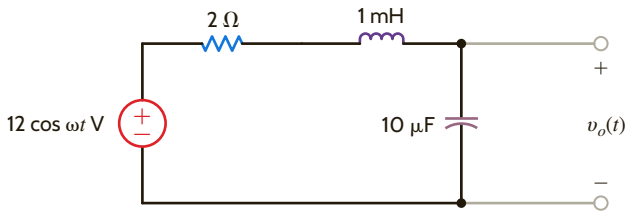

Figure 12PFE-1

12PFE-2 Given the series circuit in Fig. 12PFE-2, find the value of R so that the BW of the network about the resonant frequency is 200 rad/s.

a. 8 Ω
b. 2 Ω
c. 4 Ω
d. 6 Ω

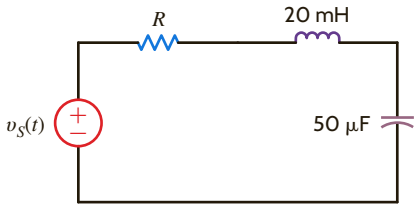

Figure 12PFE-2

12PFE-3 Given the low-pass filter circuit shown in Fig. 12PFE-3, find the frequency in Hz at which the output is down 3 dB from the dc, or very low frequency, output.

a. 26 Hz
b. 60 Hz
c. 47 Hz
d. 32 Hz

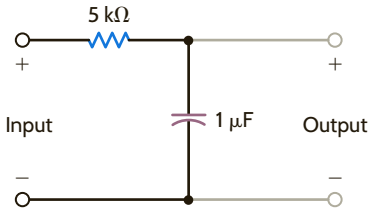

Figure 12PFE-3

12PFE-4 Given the band-pass filter shown in Fig. 12PFE-4, find the value of R necessary to provide a resonant frequency of 1000 rad/s and a BW of 100 rad/s.

a. 2 Ω
b. 10 Ω
c. 6 Ω
d. 5 Ω

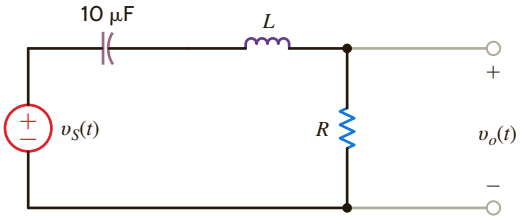

Figure 12PFE-4

12PFE-5 Given the low-pass filter shown in Fig. 12PFE-5, find the half-power frequency of this circuit if the source frequency is 8 Hz.

a. 8 Hz
b. 2 Hz
c. 12 Hz
d. 4 Hz

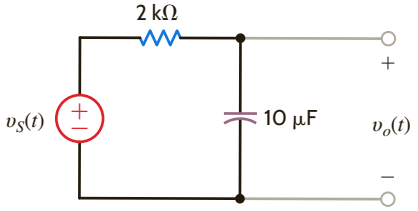

Figure 12PFE-5

Chapter Thirteen

THE LEARNING GOALS FOR THIS CHAPTER ARE THAT STUDENTS SHOULD BE ABLE TO:

- Determine the Laplace transform of signals commonly found in electric circuits.
- Perform the inverse Laplace transform using partial fraction expansion.
- Describe the concept of convolution.
- Apply the initial-value and final-value theorems to determine the voltages and currents in an ac circuit.
- Use the Laplace transform to analyze transient circuits.

THE LAPLACE TRANSFORM

AN EXPERIMENT THAT HELPS STUDENTS DEVELOP AN UNDERSTANDING OF LAPLACE TRANSFORMS IS:

- Transient Response of an *RLC* Circuit: Model the response of two second-order circuits and determine when the parasitic resistance of the inductor alters the measured transient behavior of the circuits.

13.1 Definition

The Laplace transform of a function $f(t)$ is defined by the equation

$$\mathcal{L}[f(t)] = \mathbf{F}(s) = \int_0^\infty f(t)e^{-st}\,dt \qquad \textbf{13.1}$$

where s is the complex frequency

$$s = \sigma + j\omega \qquad \textbf{13.2}$$

and the function $f(t)$ is assumed to possess the property that

$$f(t) = 0 \qquad \text{for } t < 0$$

Note that the Laplace transform is unilateral ($0 \le t < \infty$), in contrast to the Fourier transform (see Chapter 15), which is bilateral ($-\infty < t < \infty$). In our analysis of circuits using the Laplace transform, we will focus our attention on the time interval $t \ge 0$. It is the initial conditions that account for the operation of the circuit prior to $t = 0$; therefore, our analyses will describe the circuit operation for $t \ge 0$.

For a function $f(t)$ to possess a Laplace transform, it must satisfy the condition

$$\int_0^\infty e^{-\sigma t}|f(t)|\,dt < \infty \qquad \textbf{13.3}$$

for some real value of σ. Because of the convergence factor $e^{-\sigma t}$, a number of important functions have Laplace transforms, even though Fourier transforms for these functions do not exist. All of the inputs we will apply to circuits possess Laplace transforms. Functions that do not have Laplace transforms $\left(\text{e.g., } e^{t^2}\right)$ are of no interest to us in circuit analysis.

The inverse Laplace transform, which is analogous to the inverse Fourier transform, is defined by the relationship

$$\mathcal{L}^{-1}[\mathbf{F}(s)] = f(t) = \frac{1}{2\pi j}\int_{\sigma_1 - j\infty}^{\sigma_1 + j\infty} \mathbf{F}(s)e^{st}\,ds \qquad \textbf{13.4}$$

where σ_1 is real and $\sigma_1 > \sigma$ in Eq. (13.3).

Since evaluation of this integral is based on complex variable theory, we will avoid its use. How, then, will we be able to convert our solution in the complex frequency domain back to the time domain? The Laplace transform has a uniqueness property: for a given $f(t)$, there is a unique $\mathbf{F}(s)$. In other words, two different functions $f_1(t)$ and $f_2(t)$ cannot have the same $\mathbf{F}(s)$. Our procedure then will be to use Eq. (13.1) to determine the Laplace transform for a number of functions common to electric circuits and store them in a table of transform pairs. We will use a partial fraction expansion to break our complex frequency-domain solution into a group of terms for which we can utilize our table of transform pairs to identify a time function corresponding to each term.

13.2 Two Important Singularity Functions

Two singularity functions are very important in circuit analysis: (1) the unit step function, $u(t)$, discussed in Chapter 7, and (2) the unit impulse or delta function, $\delta(t)$. They are called *singularity functions* because they are either not finite or they do not possess finite derivatives everywhere. They are mathematical models for signals that we employ in circuit analysis.

The *unit step function* $u(t)$ shown in **Fig. 13.1a** was defined in Section 7.2 as

$$u(t) = \begin{cases} 0 & t < 0 \\ 1 & t > 0 \end{cases}$$

Recall that the physical analogy of this function, as illustrated earlier, corresponds to closing a switch at $t = 0$ and connecting a voltage source of 1 V or a current source of 1 A to a given circuit. The following example illustrates the calculation of the Laplace transform for unit step functions.

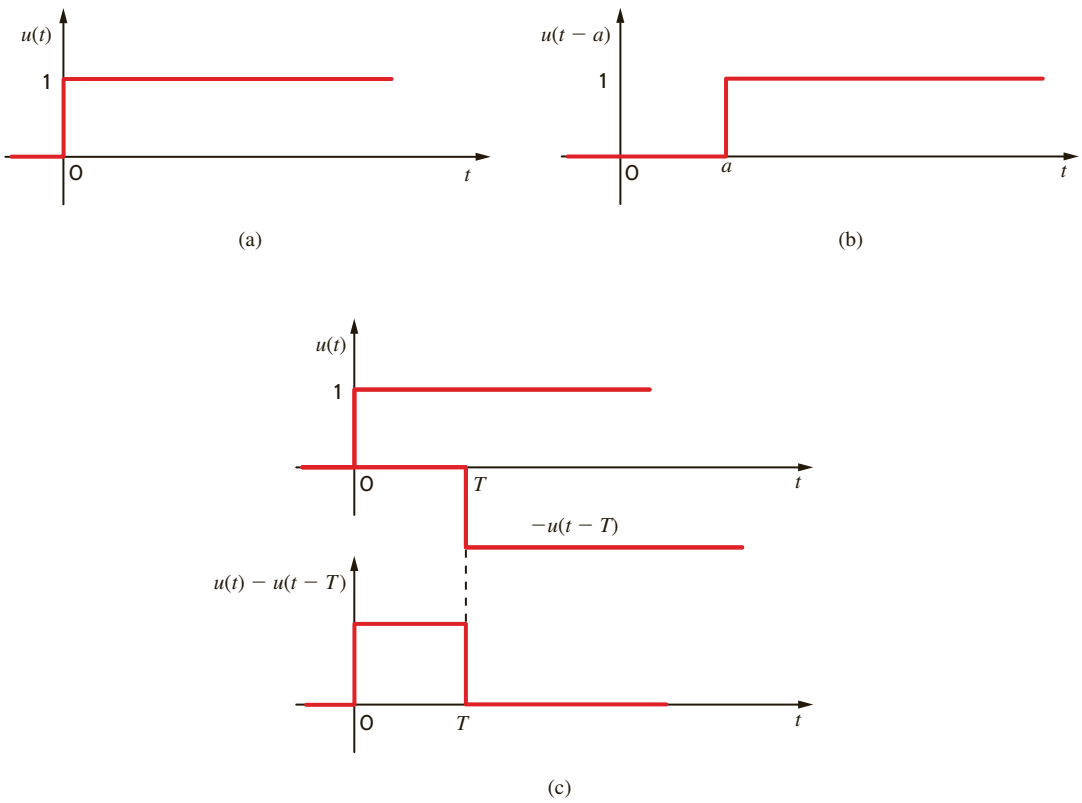

Figure 13.1

Representations of the unit step function.

EXAMPLE 13.1

Let us determine the Laplace transform for the waveforms in Fig. 13.1.

SOLUTION

The Laplace transform for the unit step function in Fig. 13.1a is

$$\begin{aligned}\mathbf{F}(s) &= \int_0^\infty u(t)e^{-st}\,dt \\ &= \int_0^\infty 1e^{-st}\,dt \\ &= -\frac{1}{s}e^{-st}\Big|_0^\infty \\ &= \frac{1}{s} \qquad \sigma > 0\end{aligned}$$

Therefore,

$$\mathscr{L}[u(t)] = \mathbf{F}(s) = \frac{1}{s}$$

The Laplace transform of the time-shifted unit step function shown in **Fig. 13.1b** is

$$\mathbf{F}(s) = \int_0^\infty u(t-a)e^{-st}\,dt$$

Note that

$$u(t-a) = \begin{cases} 1 & a < t < \infty \\ 0 & t < a \end{cases}$$

Therefore,

$$\mathbf{F}(s) = \int_a^\infty e^{-st}\,dt$$
$$= \frac{e^{-as}}{s} \qquad \sigma > 0$$

Finally, the Laplace transform of the pulse shown in **Fig. 13.1c** is

$$\mathbf{F}(s) = \int_0^\infty [u(t) - u(t-T)]e^{-st}\,dt$$
$$= \frac{1 - e^{-Ts}}{s} \qquad \sigma > 0$$

The unit impulse function can be represented in the limit by the rectangular pulse shown in **Fig. 13.2a** as $a \to 0$. The function is defined by the following:

$$\delta(t - t_0) = 0 \qquad t \neq t_0$$
$$\int_{t_0-\varepsilon}^{t_0+\varepsilon} \delta(t - t_0)\,dt = 1 \qquad \varepsilon > 0$$

The unit impulse is zero except at $t = t_0$, where it is undefined, but it has unit area (sometimes referred to as *strength*). We represent the unit impulse function on a plot as shown in **Fig. 13.2b**.

An important property of the unit impulse function is what is often called the *sampling property*, which is exhibited by the following integral:

$$\int_{t_1}^{t_2} f(t)\delta(t - t_0)\,dt = \begin{cases} f(t_0) & t_1 < t_0 < t_2 \\ 0 & t_0 < t_1,\ t_0 > t_2 \end{cases}$$

for a finite t_0 and any $f(t)$ continuous at t_0. Note that the unit impulse function simply samples the value of $f(t)$ at $t = t_0$.

Now that we have defined the unit impulse function, let's consider the following question: why introduce the unit impulse function? We certainly cannot produce a voltage or current signal with zero width and infinite height in a physical system. For engineers, the unit impulse function is a convenient mathematical function that can be utilized to model a physical process. For example, a lightning stroke is a short-duration event. If we were analyz-

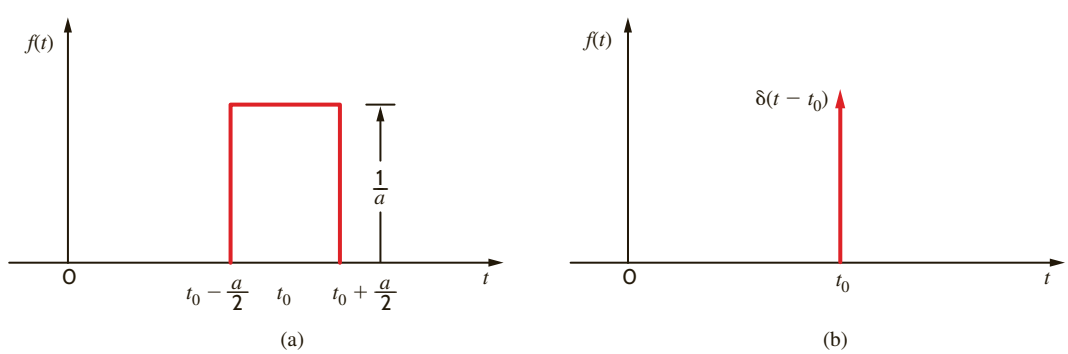

Figure 13.2

Representations of the unit impulse.

ing a system that was struck by lightning, we might consider modeling the lightning stroke as a unit impulse function. Another example is the process of sampling where an analog-to-digital converter (ADC) is utilized to convert a time signal into values that can be used in a computer. The ADC captures the value of the time signal at certain instants of time. The sampling property of the unit impulse function described above is very useful in modeling the sampling process.

EXAMPLE 13.2

Let us determine the Laplace transform of an impulse function.

SOLUTION

The Laplace transform of the impulse function is

$$\mathbf{F}(s) = \int_0^\infty \delta(t - t_0)\, e^{-st}\, dt$$

Using the sampling property of the delta function, we obtain

$$\mathscr{L}[\delta(t - t_0)] = e^{-t_0 s}$$

In the limit as $t_0 \to 0$, $e^{-t_0 s} \to 1$, and therefore

$$\mathscr{L}[\delta(t)] = \mathbf{F}(s) = 1$$

13.3 Transform Pairs

We will now illustrate the development of a number of basic transform pairs that are very useful in circuit analysis.

EXAMPLE 13.3

Let us find the Laplace transform of $f(t) = t$.

SOLUTION

The Laplace transform of the function $f(t) = t$ is

$$\mathbf{F}(s) = \int_0^\infty t e^{-st}\, dt$$

Integrating the function by parts, we let

$$u = t \qquad \text{and} \qquad dv = e^{-st}\, dt$$

Then

$$du = dt \qquad \text{and} \qquad v = \int e^{-st}\, dt = -\frac{1}{s} e^{-st}$$

Therefore,

$$\mathbf{F}(s) = \frac{-t}{s} e^{-st} \Big|_0^\infty + \int_0^\infty \frac{e^{-st}}{s}\, dt$$

$$= \frac{1}{s^2} \qquad \sigma > 0$$

HINT

$t \leftrightarrow \frac{1}{s^2}$

EXAMPLE 13.4

Let us determine the Laplace transform of the cosine function.

SOLUTION

The Laplace transform for the cosine function is

$$\begin{aligned}\mathbf{F}(s) &= \int_0^\infty \cos \omega t\, e^{-st}\, dt \\ &= \int_0^\infty \frac{e^{+j\omega t} + e^{-j\omega t}}{2} e^{-st}\, dt \\ &= \int_0^\infty \frac{e^{-(s-j\omega)t} + e^{-(s+j\omega)t}}{2}\, dt \\ &= \frac{1}{2}\left(\frac{1}{s-j\omega} + \frac{1}{s+j\omega}\right) \qquad \sigma > 0 \\ &= \frac{s}{s^2+\omega^2}\end{aligned}$$

HINT

$\cos \omega t \leftrightarrow \dfrac{s}{s^2+\omega^2}$

A short table of useful Laplace transform pairs is shown in Table 13.1.

Once the transform pairs are known, we can easily move back and forth between the time domain and the complex frequency domain without having to use Eqs. (13.1) and (13.4).

LEARNING ASSESSMENTS

E13.1 If $f(t) = e^{-at}$, show that $\mathbf{F}(s) = 1/(s + a)$.

E13.2 If $f(t) = \sin \omega t$, show that $\mathbf{F}(s) = \omega/(s^2 + \omega^2)$.

TABLE 13.1 Short table of Laplace transform pairs

$f(t)$	$F(s)$
$\delta(t)$	1
$u(t)$	$\frac{1}{s}$
e^{-at}	$\frac{1}{s+a}$
t	$\frac{1}{s^2}$
$\frac{t^n}{n!}$	$\frac{1}{s^{n+1}}$
te^{-at}	$\frac{1}{(s+a)^2}$
$\frac{t^n e^{-at}}{n!}$	$\frac{1}{(s+a)^{n+1}}$
$\sin bt$	$\frac{b}{s^2+b^2}$
$\cos bt$	$\frac{s}{s^2+b^2}$
$e^{-at}\sin bt$	$\frac{b}{(s+a)^2+b^2}$
$e^{-at}\cos bt$	$\frac{s+a}{(s+a)^2+b^2}$

13.4 Properties of the Transform

A number of useful theorems describe important properties of the Laplace transform. We will first demonstrate a couple of these theorems, provide a concise listing of a number of them, and, finally, illustrate their usefulness via several examples.

The *time-scaling theorem* states that

$$\mathcal{L}[f(at)] = \frac{1}{a}\mathbf{F}\left(\frac{s}{a}\right) \qquad a > 0 \tag{13.5}$$

The *Laplace transform* of $f(at)$ is

$$\mathcal{L}[f(at)] = \int_0^\infty f(at)e^{-st}\,dt$$

Now let $\lambda = at$ and $d\lambda = a\,dt$. Then

$$\begin{aligned}\mathcal{L}[f(at)] &= \int_0^\infty f(\lambda)e^{-(\lambda/a)s}\frac{d\lambda}{a}\\ &= \frac{1}{a}\int_0^\infty f(\lambda)e^{-(s/a)\lambda}\,d\lambda\\ &= \frac{1}{a}\mathbf{F}\left(\frac{s}{a}\right) \qquad a > 0\end{aligned}$$

The *time-shifting theorem* states that

$$\mathcal{L}[f(t-t_0)u(t-t_0)] = e^{-t_0 s}\mathbf{F}(s) \qquad t_0 \geq 0 \tag{13.6}$$

This theorem is illustrated as follows:

$$\begin{aligned}\mathcal{L}[f(t-t_0)u(t-t_0)] &= \int_0^\infty f(t-t_0)u(t-t_0)\,e^{-st}\,dt\\ &= \int_{t_0}^\infty f(t-t_0)e^{-st}\,dt\end{aligned}$$

If we now let $\lambda = t - t_0$ and $d\lambda = dt$, then

$$\begin{aligned}\mathcal{L}[f(t-t_0)u(t-t_0)] &= \int_0^\infty f(\lambda)\,e^{-s(\lambda+t_0)}\,d\lambda\\ &= e^{-t_0 s}\int_0^\infty f(\lambda)\,e^{-s\lambda}\,d\lambda\\ &= e^{-t_0 s}\mathbf{F}(s) \qquad t_0 \geq 0\end{aligned}$$

The *frequency-shifting*, or *modulation*, *theorem* states that

$$\mathcal{L}[e^{-at}f(t)] = \mathbf{F}(s+a) \tag{13.7}$$

By definition,

$$\begin{aligned}\mathcal{L}[e^{-at}f(t)] &= \int_0^\infty e^{-at}f(t)e^{-st}\,dt\\ &= \int_0^\infty f(t)\,e^{-(s+a)t}\,dt\\ &= \mathbf{F}(s+a)\end{aligned}$$

The three theorems we have demonstrated, together with a number of other important properties, are listed in a concise manner in Table 13.2. Let us now provide several simple examples that illustrate how these properties can be used.

TABLE 13.2 Some useful properties of the Laplace transform

PROPERTY NUMBER	$f(t)$	$\mathbf{F}(s)$
1. Magnitude scaling	$Af(t)$	$A\mathbf{F}(s)$
2. Addition/subtraction	$f_1(t) \pm f_2(t)$	$\mathbf{F}_1(s) \pm \mathbf{F}_2(s)$
3. Time scaling	$f(at)$	$\frac{1}{a}\mathbf{F}\left(\frac{s}{a}\right),\ a > 0$
4. Time shifting	$f(t - t_0)u(t - t_0),\ t \geq 0$	$e^{-t_0 s}\mathbf{F}(s)$
	$f(t)u(t - t_0)$	$e^{-t_0 s}\mathscr{L}[f(t + t_0)]$
5. Frequency shifting	$e^{-at}f(t)$	$\mathbf{F}(s + a)$
6. Differentiation	$\frac{d^n f(t)}{dt^n}$	$s^n\mathbf{F}(s) - s^{n-1}f(0) - s^{n-2}f^1(0) \cdots - s^0 f^{n-1}(0)$
7. Multiplication by t	$tf(t)$	$-\frac{d\mathbf{F}(s)}{ds}$
	$t^n f(t)$	$(-1)^n \frac{d^n\mathbf{F}(s)}{ds^n}$
8. Division by t	$\frac{f(t)}{t}$	$\int_s^\infty \mathbf{F}(\lambda)\,d\lambda$
9. Integration	$\int_0^t f(\lambda)\,d\lambda$	$\frac{1}{s}\mathbf{F}(s)$
10. Convolution	$\int_0^t f_1(\lambda)f_2(t - \lambda)\,d\lambda$	$\mathbf{F}_1(s)\mathbf{F}_2(s)$

EXAMPLE 13.5

Use the Laplace transform of $\cos \omega t$ to find the Laplace transform of $e^{-at} \cos \omega t$.

SOLUTION

Since the Laplace transform of $\cos \omega t$ is known to be

$$\mathscr{L}[\cos \omega t] = \frac{s}{s^2 + \omega^2}$$

then using property number 5,

$$\mathscr{L}[e^{-at} \cos \omega t] = \frac{s + a}{(s + a)^2 + \omega^2}$$

EXAMPLE 13.6

Let us demonstrate property number 8.

SOLUTION

If $f(t) = te^{-at}$, then

$$\mathbf{F}(\lambda) = \frac{1}{(\lambda + a)^2}$$

Therefore,

$$\int_s^\infty \mathbf{F}(\lambda)\,d\lambda = \int_s^\infty \frac{1}{(\lambda + a)^2}\,d\lambda = \frac{-1}{\lambda + a}\Big|_s^\infty = \frac{1}{s + a}$$

Hence,

$$f_1(t) = \frac{f(t)}{t} = \frac{te^{-at}}{t} = e^{-at} \qquad \text{and} \qquad \mathbf{F}_1(s) = \frac{1}{s + a}$$

EXAMPLE 13.7

Let us employ the Laplace transform to solve the equation

$$\frac{dy(t)}{dt} + 2y(t) + \int_0^t y(\lambda)e^{-2(t-\lambda)}d\lambda = 10u(t) \qquad y(0) = 0$$

SOLUTION

Applying property numbers 6 and 10, we obtain

$$s\mathbf{Y}(s) + 2\mathbf{Y}(s) + \frac{\mathbf{Y}(s)}{s+2} = \frac{10}{s}$$

$$\mathbf{Y}(s)\left(s + 2 + \frac{1}{s+2}\right) = \frac{10}{s}$$

$$\mathbf{Y}(s) = \frac{10(s+2)}{s(s^2+4s+5)}$$

This is the solution of the linear constant-coefficient integrodifferential equation in the s-domain. However, we want the solution $y(t)$ in the time domain. $y(t)$ is obtained by performing the inverse transform, which is the topic of the next section, and the solution $y(t)$ is derived in Example 13.9.

LEARNING ASSESSMENTS

E13.3 Find $\mathbf{F}(s)$ if $f(t) = \frac{1}{2}(t - 4e^{-2t})$.

ANSWER: $\mathbf{F}(s) = \frac{1}{2s^2} - \frac{2}{s+2}$.

E13.4 If $f(t) = te^{-(t-1)}u(t-1) - e^{-(t-1)}u(t-1)$, determine $\mathbf{F}(s)$ using the time-shifting theorem.

ANSWER: $\mathbf{F}(s) = \frac{e^{-s}}{(s+1)^2}$.

E13.5 Find $\mathbf{F}(s)$ if $f(t) = e^{-4t}(t - e^{-t})$. Use property number 2.

ANSWER: $\mathbf{F}(s) = \frac{1}{(s+4)^2} - \frac{1}{s+5}$.

13.5 Performing the Inverse Transform

As we begin our discussion of this topic, let us outline the procedure we will use in applying the Laplace transform to circuit analysis. First, we will transform the problem from the time domain to the complex frequency domain (that is, s-domain). Next, we will solve the circuit equations algebraically in the complex frequency domain. Finally, we will transform the solution from the s-domain back to the time domain. It is this latter operation that we discuss now.

The algebraic solution of the circuit equations in the complex frequency domain results in a rational function of s of the form

$$\mathbf{F}(s) = \frac{\mathbf{P}(s)}{\mathbf{Q}(s)} = \frac{a_m s^m + a_{m-1}s^{m-1} + \cdots + a_1 s + a_0}{b_n s^n + b_{n-1}s^{n-1} + \cdots + b_1 s + b_0} \qquad \textbf{13.8}$$

The roots of the polynomial $\mathbf{P}(s)$ (i.e., $-z_1, -z_2 \cdots -z_m$) are called the *zeros* of the function $\mathbf{F}(s)$ because at these values of s, $\mathbf{F}(s) = 0$. Similarly, the roots of the polynomial $\mathbf{Q}(s)$ (i.e., $-p_1, -p_2 \cdots -p_n$) are called *poles* of $\mathbf{F}(s)$, since at these values of s, $\mathbf{F}(s)$ becomes infinite.

If $\mathbf{F}(s)$ is a proper rational function of s, then $n > m$. However, if this is not the case, we simply divide $\mathbf{P}(s)$ by $\mathbf{Q}(s)$ to obtain a quotient and a remainder; that is,

$$\frac{\mathbf{P}(s)}{\mathbf{Q}(s)} = C_{m-n}s^{m-n} + \cdots + C_2s^2 + C_1s + C_0 + \frac{\mathbf{P}_1(s)}{\mathbf{Q}(s)} \tag{13.9}$$

Now $\mathbf{P}_1(s)/\mathbf{Q}(s)$ is a proper rational function of s. Let us examine the possible forms of the roots of $\mathbf{Q}(s)$:

1. If the roots are simple, $\mathbf{P}_1(s)/\mathbf{Q}(s)$ can be expressed in partial fraction form as

$$\frac{\mathbf{P}_1(s)}{\mathbf{Q}(s)} = \frac{K_1}{s+p_1} + \frac{K_2}{s+p_2} + \cdots + \frac{K_n}{s+p_n} \tag{13.10}$$

2. If $\mathbf{Q}(s)$ has simple complex roots, they will appear in complex-conjugate pairs, and the partial fraction expansion of $\mathbf{P}_1(s)/\mathbf{Q}(s)$ for each pair of complex-conjugate roots will be of the form

$$\frac{\mathbf{P}_1(s)}{\mathbf{Q}_1(s)(s+\alpha-j\beta)(s+\alpha+j\beta)} = \frac{K_1}{s+\alpha-j\beta} + \frac{K_1^*}{s+\alpha+j\beta} + \cdots \tag{13.11}$$

   where $\mathbf{Q}(s) = \mathbf{Q}_1(s)(s+a-j\beta)(s+\alpha+j\beta)$ and K_1^* in the complex conjugate of K_1.

3. If $\mathbf{Q}(s)$ has a root of multiplicity r, the partial fraction expansion for each such root will be of the form

$$\frac{\mathbf{P}_1(s)}{\mathbf{Q}_1(s)(s+p_1)^r} = \frac{K_{11}}{(s+p_1)} + \frac{K_{12}}{(s+p_1)^2} + \cdots + \frac{K_{1r}}{(s+p_1)^r} + \cdots \tag{13.12}$$

The importance of these partial fraction expansions stems from the fact that once the function $\mathbf{F}(s)$ is expressed in this form, the individual inverse Laplace transforms can be obtained from known and tabulated transform pairs. The sum of these inverse Laplace transforms then yields the desired time function, $f(t) = \mathcal{L}^{-1}[\mathbf{F}(s)]$.

SIMPLE POLES Let us assume that all the poles of $\mathbf{F}(s)$ are simple, so that the partial fraction expansion of $\mathbf{F}(s)$ is of the form

$$\mathbf{F}(s) = \frac{\mathbf{P}(s)}{\mathbf{Q}(s)} = \frac{K_1}{s+p_1} + \frac{K_2}{s+p_2} + \cdots + \frac{K_n}{s+p_n} \tag{13.13}$$

Then the constant K_i can be computed by multiplying both sides of this equation by $(s+p_i)$ and evaluating the equation at $s = -p_i$; that is,

$$\left.\frac{(s+p_i)\mathbf{P}(s)}{\mathbf{Q}(s)}\right|_{s=-p_i} = 0 + \cdots + 0 + K_i + 0 + \cdots + 0 \qquad i = 1, 2, \ldots, n \tag{13.14}$$

Once all of the K_i terms are known, the time function $f(t) = \mathcal{L}^{-1}[\mathbf{F}(s)]$ can be obtained using the Laplace transform pair:

$$\mathcal{L}^{-1}\left[\frac{1}{s+a}\right] = e^{-at} \tag{13.15}$$

EXAMPLE 13.8

Given that

$$\mathbf{F}(s) = \frac{12(s+1)(s+3)}{s(s+2)(s+4)(s+5)}$$

let us find the function $f(t) = \mathcal{L}^{-1}[\mathbf{F}(s)]$.

SOLUTION Expressing $\mathbf{F}(s)$ in a partial fraction expansion, we obtain

$$\frac{12(s+1)(s+3)}{s(s+2)(s+4)(s+5)} = \frac{K_0}{s} + \frac{K_1}{s+2} + \frac{K_2}{s+4} + \frac{K_3}{s+5}$$

To determine K_0, we multiply both sides of the equation by s to obtain the equation

$$\frac{12(s+1)(s+3)}{(s+2)(s+4)(s+5)} = K_0 + \frac{K_1 s}{s+2} + \frac{K_2 s}{s+4} + \frac{K_3 s}{s+5}$$

Evaluating the equation at $s = 0$ yields

$$\frac{(12)(1)(3)}{(2)(4)(5)} = K_0 + 0 + 0 + 0$$

or

$$K_0 = \frac{36}{40}$$

Similarly,

$$(s+2)\mathbf{F}(s)\Big|_{S=-2} = \frac{12(s+1)(s+3)}{s(s+4)(s+5)}\Big|_{S=-2} = K_1$$

or

$$K_1 = 1$$

Using the same approach, we find that $K_2 = \frac{36}{8}$ and $K_3 = -\frac{32}{5}$. Hence, $\mathbf{F}(s)$ can be written as

$$\mathbf{F}(s) = \frac{36/40}{s} + \frac{1}{s+2} + \frac{36/8}{s+4} - \frac{32/5}{s+5}$$

Then $f(t) = \mathscr{L}^{-1}[\mathbf{F}(s)]$ is

$$f(t) = \left(\frac{36}{40} + 1e^{-2t} + \frac{36}{8}e^{-4t} - \frac{32}{5}e^{-5t}\right)u(t)$$

LEARNING ASSESSMENTS

E13.6 Find $f(t)$ if $\mathbf{F}(s) = 10(s+6)/(s+1)(s+3)$.

ANSWER:
$f(t) = (25e^{-t} - 15e^{-3t})u(t)$.

E13.7 If $\mathbf{F}(s) = 12(s+2)/s(s+1)$, find $f(t)$.

ANSWER:
$f(t) = (24 - 12e^{-t})u(t)$.

E13.8 Given $\mathbf{F}(s) = \dfrac{s^2+5s+1}{s(s+1)(s+4)}$, find $f(t)$.

ANSWER:
$f(t) = (0.25 + e^{-t} - 0.25e^{-4t})u(t)$.

COMPLEX-CONJUGATE POLES Let us assume that $\mathbf{F}(s)$ has one pair of complex-conjugate poles. The partial fraction expansion of $\mathbf{F}(s)$ can then be written as

$$\mathbf{F}(s) = \frac{\mathbf{P}_1(s)}{\mathbf{Q}_1(s)(s+\alpha-j\beta)(s+\alpha+j\beta)} = \frac{K_1}{s+\alpha-j\beta} + \frac{K_1^*}{s+\alpha+j\beta} + \cdots \qquad \textbf{13.16}$$

The constant K_1 can then be determined using the procedure employed for simple poles; that is,

$$(s+\alpha-j\beta)\mathbf{F}(s)\Big|_{s=-\alpha+j\beta} = K_1 \qquad \textbf{13.17}$$

In this case K_1 is in general a complex number that can be expressed as $|K_1|\,\underline{/\theta}$. Then $K_1^* = |K_1|\,\underline{/-\theta}$. Hence, the partial fraction expansion can be expressed in the form

$$\mathbf{F}(s) = \frac{|K_1|\underline{/\theta}}{s+\alpha-j\beta} + \frac{|K_1|\underline{/-\theta}}{s+\alpha-j\beta} + \cdots \qquad \textbf{13.18}$$

$$= \frac{|K_1|e^{j\theta}}{s+\alpha-j\beta} + \frac{|K_1|e^{-j\theta}}{s+\alpha+j\beta} + \cdots$$

HINT

Recall that

$$\cos x = \frac{e^{jx}+e^{-jx}}{2}$$

The corresponding time function is then of the form

$$f(t) = \mathcal{L}^{-1}[\mathbf{F}(s)] = |K_1|e^{j\theta}e^{-(\alpha-j\beta)t} + |K_1|e^{-j\theta}e^{-(\alpha+j\beta)t} + \cdots$$

$$= |K_1|e^{-\alpha t}[e^{j(\beta t+\theta)} + e^{-j(\beta t+\theta)}] + \cdots \qquad \textbf{13.19}$$

$$= 2|K_1|e^{-\alpha t}\cos(\beta t+\theta) + \cdots$$

EXAMPLE 13.9

Let us determine the time function $y(t)$ for the function

$$\mathbf{Y}(s) = \frac{10(s+2)}{s(s^2+4s+5)}$$

SOLUTION

Expressing the function in a partial fraction expansion, we obtain

$$\frac{10(s+2)}{s(s+2-j1)(s+2+j1)} = \frac{K_0}{s} + \frac{K_1}{s+2-j1} + \frac{K_1^*}{s+2-j1}$$

$$\left.\frac{10(s+2)}{s^2+4s+5}\right|_{s=0} = K_0$$

$$4 = K_0$$

In a similar manner,

$$\left.\frac{10(s+2)}{s(s+2+j1)}\right|_{s=-2+j1} = K_1$$

$$2.236\underline{/-153.43^\circ} = K_1$$

Therefore,

$$2.236\underline{/153.43^\circ} = K_1^*$$

The partial fraction expansion of $\mathbf{Y}(s)$ is then

$$\mathbf{Y}(s) = \frac{4}{s} + \frac{2.236\underline{/-153.43^\circ}}{s+2-j1} + \frac{2.236\underline{/153.43^\circ}}{s+2+j1}$$

and therefore,

$$y(t) = [4 + 4.472e^{-2t}\cos(t - 153.43^\circ)]\,u(t)$$

LEARNING ASSESSMENTS

E13.9 Determine $f(t)$ if $\mathbf{F}(s) = s/(s^2+4s+8)$.

ANSWER:
$f(t) = 1.41e^{-2t}\cos(2t+45^\circ)u(t)$.

E13.10 Given $\mathbf{F}(s) = \dfrac{4(s+3)}{(s+1)(s^2+2s+5)}$, find $f(t)$.

ANSWER:
$f(t) = (2e^{-t} + 2\sqrt{2}e^{-t}\cos(2t-135^\circ))u(t)$.

MULTIPLE POLES Let us suppose that $\mathbf{F}(s)$ has a pole of multiplicity r. Then $\mathbf{F}(s)$ can be written in a partial fraction expansion of the form

$$\mathbf{F}(s) = \frac{\mathbf{P}_1(s)}{\mathbf{Q}_1(s)(s+p_1)^r}$$
$$= \frac{K_{11}}{s+p_1} + \frac{K_{12}}{(s+p_1)^2} + \cdots + \frac{K_{1r}}{(s+p_1)^r} + \cdots \qquad \textbf{13.20}$$

Employing the approach for a simple pole, we can evaluate K_{1r} as

$$(s+p_1)^r \mathbf{F}(s)\Big|_{s=-p_1} = K_{1r} \qquad \textbf{13.21}$$

To evaluate K_{1r-1} we multiply $\mathbf{F}(s)$ by $(s+p_1)^r$ as we did to determine K_{1r}; however, prior to evaluating the equation at $s = -p_1$, we take the derivative with respect to s. The proof that this will yield K_{1r-1} can be obtained by multiplying both sides of Eq. (13.20) by $(s+p_1)^r$ and then taking the derivative with respect to s. Now when we evaluate the equation at $s = -p_1$, the only term remaining on the right side of the equation is K_{1r-1}, and therefore,

$$\frac{d}{ds}\left[(s+p_1)^r \mathbf{F}(s)\right]\Big|_{s=-p_1} = K_{1r-1} \qquad \textbf{13.22}$$

K_{1r-2} can be computed in a similar fashion, and in that case the equation is

$$\frac{d^2}{ds^2}\left[(s+p_1)^r \mathbf{F}(s)\right]\Big|_{s=-p_1} = (2!)K_{1r-2} \qquad \textbf{13.23}$$

The general expression for this case is

$$K_{1j} = \frac{1}{(r-j)!}\frac{d^{r-j}}{ds^{r-j}}\left[(s+p_1)^r \mathbf{F}(s)\right]\Big|_{s=-p_1} \qquad \textbf{13.24}$$

Let us illustrate this procedure with an example.

EXAMPLE 13.10

Given the following function $\mathbf{F}(s)$, let us determine the corresponding time function $f(t) = \mathcal{L}^{-1}[\mathbf{F}(s)]$.

$$\mathbf{F}(s) = \frac{10(s+3)}{(s+1)^3(s+2)}$$

SOLUTION

Expressing $\mathbf{F}(s)$ as a partial fraction expansion, we obtain

$$\mathbf{F}(s) = \frac{10(s+3)}{(s+1)^3(s+2)}$$
$$= \frac{K_{11}}{s+1} + \frac{K_{12}}{(s+1)^2} + \frac{K_{13}}{(s+1)^3} + \frac{K_2}{s+2}$$

Then

$$(s+1)^3\mathbf{F}(s)\Big|_{s=-1} = K_{13}$$
$$20 = K_{13}$$

K_{12} is now determined by the equation

$$\frac{d}{ds}\left[(s+1)^3\mathbf{F}(s)\right]\Big|_{s=-1} = K_{12}$$
$$\frac{-10}{(s+2)^2}\Big|_{s=-1} = -10 = K_{12}$$

In a similar fashion, K_{11} is computed from the equation

$$\frac{d^2}{ds^2}\left[(s+1)^3\mathbf{F}(s)\right]\Big|_{s=-1} = 2K_{11}$$

$$\frac{20}{(s+2)^3}\Big|_{s=-1} = 20 = 2K_{11}$$

Therefore,

$$10 = K_{11}$$

In addition,

$$(s+2)\mathbf{F}(s)\Big|_{s=-2} = K_2$$

$$-10 = K_2$$

Hence, $\mathbf{F}(s)$ can be expressed as

$$\mathbf{F}(s) = \frac{10}{s+1} - \frac{10}{(s+1)^2} + \frac{20}{(s+1)^3} - \frac{10}{s+2}$$

Now we employ the transform pair

$$\mathcal{L}^{-1}\left[\frac{1}{(s+a)^{n+1}}\right] = \frac{t^n}{n!}e^{-at}$$

and hence,

$$f(t) = (10e^{-t} - 10te^{-t} + 10t^2e^{-t} - 10e^{-2t})u(t)$$

LEARNING ASSESSMENTS

E13.11 Determine $f(t)$ if $\mathbf{F}(s) = s/(s+1)^2$.

ANSWER:
$f(t) = (e^{-t} - te^{-t})u(t)$.

E13.12 If $\mathbf{F}(s) = (s+2)/s^2(s+1)$, find $f(t)$.

ANSWER:
$f(t) = (-1 + 2t + e^{-t})u(t)$.

E13.13 Given $\mathbf{F}(s) = \dfrac{100}{s^3(s+5)}$, find $f(t)$.

ANSWER:
$f(t) = (0.8 - 4t + 10t^2 - 0.8e^{-5t})u(t)$.

Back in Chapter 7 we discussed the characteristic equation for a second-order transient circuit. The polynomial $\mathbf{Q}(s) = 0$ is the characteristic equation for our circuit. The roots of the characteristic equation, also called the poles of $\mathbf{F}(s)$, determine the time response for our circuit. If $\mathbf{Q}(s) = 0$ has simple roots, then the time response will be characterized by decaying exponential functions. Multiple roots produce a time response that contains decaying exponential terms such as e^{-at}, te^{-at}, and t^2e^{-at}. The time response for simple complex-conjugate roots is a sinusoidal function whose amplitude decays exponentially. Note that all of these time responses decay to zero with time. Suppose our circuit response contained a term such as $3e^{2t}$. A quick plot of this function reveals that it increases without bound for $t > 0$. Certainly, if our circuit was characterized by this type of response, we would need eye protection as our circuit destructed before us!

Earlier, in Eq. (13.8), we defined $\mathbf{F}(s)$ as the ratio of two polynomials. Let's suppose that $m = n$ in this equation. In this case, only C_0 is nonzero in Eq. (13.9). Recall that we perform a partial fraction expansion on $\mathbf{P}_1(s)/\mathbf{Q}(s)$ and use our table of Laplace transform pairs to determine the corresponding time function for each term in the expansion. What do we do with this constant C_0? Looking at our table of transform pairs in Table 13.1, we note that the Laplace transform of the unit impulse function is a constant. As a result, our circuit response would contain a unit impulse function. Earlier we noted that unit impulse functions don't exist in physical systems; therefore, $m < n$ for physical systems.

13.6 Convolution Integral

Convolution is a very important concept and has wide application in circuit and systems analysis. We first illustrate the connection that exists between the convolution integral and the Laplace transform. We then indicate the manner in which the convolution integral is applied in circuit analysis.

Property number 10 in Table 13.2 states the following.

If

$$f(t) = f_1(t) \otimes f_2(t) = \int_0^t f_1(t-\lambda) f_2(\lambda)\, d\lambda = \int_0^t f_1(\lambda) f_2(t-\lambda)\, d\lambda \qquad \textbf{13.25}$$

and

$$\mathscr{L}[f(t)] = \mathbf{F}(s),\ \mathscr{L}[f_1(t)] = \mathbf{F}_1(s) \qquad \text{and} \qquad \mathscr{L}[f_2(t)] = \mathbf{F}_2(s)$$

then

$$\mathbf{F}(s) = \mathbf{F}_1(s)\mathbf{F}_2(s) \qquad \textbf{13.26}$$

Our demonstration begins with the definition

$$\mathscr{L}[f(t)] = \int_0^\infty \left[\int_0^t f_1(t-\lambda) f_2(\lambda)\, d\lambda\right] e^{-st}\, dt$$

We now force the function into the proper format by introducing into the integral within the brackets the unit step function $u(t-\lambda)$. We can do this because

$$u(t-\lambda) = \begin{cases} 1 & \text{for } \lambda < t \\ 0 & \text{for } \lambda > t \end{cases} \qquad \textbf{13.27}$$

The first condition in Eq. (13.27) ensures that the insertion of the unit step function has no impact within the limits of integration. The second condition in Eq. (13.27) allows us to change the upper limit of integration from t to ∞. Therefore,

$$\mathscr{L}[f(t)] = \int_0^\infty \left[\int_0^\infty f_1(t-\lambda) u(t-\lambda) f_2(\lambda)\, d\lambda\right] e^{-st}\, dt$$

which can be written as

$$\mathscr{L}[f(t)] = \int_0^\infty f_2(\lambda) \left[\int_0^\infty f_1(t-\lambda) u(t-\lambda) e^{-st}\, dt\right] d\lambda$$

Note that the integral within the brackets is the time-shifting theorem illustrated in Eq. (13.6). Hence, the equation can be written as

$$\begin{aligned} \mathscr{L}[f(t)] &= \int_0^\infty f_2(\lambda) \mathbf{F}_1(s) e^{-s\lambda}\, d\lambda \\ &= \mathbf{F}_1(s) \int_0^\infty f_2(\lambda) e^{-s\lambda}\, d\lambda \\ &= \mathbf{F}_1(s)\mathbf{F}_2(s) \end{aligned}$$

Note that convolution in the time domain corresponds to multiplication in the frequency domain.

Let us now illustrate the use of this property in the evaluation of an inverse Laplace transform.

EXAMPLE 13.11

The transfer function for a network is given by the expression

$$\mathbf{H}(s) = \frac{\mathbf{V}_o(s)}{\mathbf{V}_s(s)} = \frac{10}{s+5}$$

The input is a unit step function $\mathbf{V}_S(s) = \frac{1}{s}$. Let us use convolution to determine the output voltage $v_o(t)$.

SOLUTION

Since $\mathbf{H}(s) = \frac{10}{(s+5)}$, $h(t) = 10e^{-5t}$ and therefore

$$\begin{aligned} v_o(t) &= \int_0^t 10u(\lambda)e^{-5(t-\lambda)}\,d\lambda \\ &= 10e^{-5t}\int_0^t e^{5\lambda}\,d\lambda \\ &= \frac{10e^{-5t}}{5}[e^{5t}-1] \\ &= 2[1-e^{-5t}]u(t)\ \text{V} \end{aligned}$$

For comparison, let us determine $v_o(t)$ from $\mathbf{H}(s)$ and $\mathbf{V}_s(s)$ using the partial fraction expansion method. $\mathbf{V}_o(s)$ can be written as

$$\begin{aligned} \mathbf{V}_o(s) &= \mathbf{H}(s)\mathbf{V}_s(s) \\ &= \frac{10}{s(s+5)} = \frac{K_0}{s} + \frac{K_1}{s+5} \end{aligned}$$

Evaluating the constants, we obtain $K_0 = 2$ and $K_1 = -2$. Therefore,

$$\mathbf{V}_o(s) = \frac{2}{s} - \frac{2}{s+5}$$

and hence

$$v_o(t) = 2[1-e^{-5t}]u(t)\ \text{V}$$

Although we can employ convolution to derive an inverse Laplace transform, the example, though quite simple, illustrates that this is a very poor approach. If the function $\mathbf{F}(s)$ is very complicated, the mathematics can become unwieldy. Convolution is, however, a very powerful and useful tool. For example, if we know the impulse response of a network, we can use convolution to determine the network's response to an input that may be available only as an experimental curve obtained in the laboratory. Thus, convolution permits us to obtain the network response to inputs that cannot be written as analytical functions but can be simulated on a digital computer. In addition, we can use convolution to model a circuit, which is completely unknown to us, and use this model to determine the circuit's response to some input signal.

EXAMPLE 13.12

To demonstrate the power of convolution, we will create a model for a "black-box" linear band-pass filter, shown as a block in Fig. 13.3. We have no details about the filter circuitry at all—no circuit diagram, no component list, no component values. As a result, our filter model must be based solely on measurements. Using our knowledge of convolution and the Laplace transform, let us discuss appropriate measurement techniques, the resulting model, and how to employ the model in subsequent simulations.

Figure 13.3

Conceptual diagram for a band-pass filter.

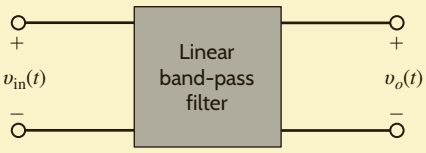

SOLUTION

Because the filter is linear, $v_o(t)$ can be written

$$v_o(t) = h(t) \otimes v_{in}(t) \tag{13.28}$$

Thus, the function $h(t)$ will be our model for the filter. To determine $h(t)$, we must input some $v_{in}(t)$, measure the response, $v_o(t)$, and perform the appropriate mathematics. One obvious option for $v_{in}(t)$ is the impulse function, $\delta(t)$; then $\mathbf{V}_{in}(s)$ is 1, and the output is the desired model, $h(t)$:

$$v_o(t) = h(t)$$

Unfortunately, creating an adequate impulse, infinite amplitude, and zero width in the laboratory is nontrivial. It is much easier, and more common, to apply a step function such as $10\,u(t)$. Then $\mathbf{V}_{in}(s)$ is $10/s$, and the output can be expressed in the s-domain as

$$\mathbf{V}_o(s) = \mathbf{H}(s)\left[\frac{10}{s}\right]$$

or

$$\mathbf{H}(s) = \left[\frac{s}{10}\right]\mathbf{V}_o(s)$$

Since multiplication by s is equivalent to the time derivative, we have for $h(t)$

$$h(t) = \left[\frac{1}{10}\right]\frac{dv_o(t)}{dt} \tag{13.29}$$

Thus, $h(t)$ can be obtained from the derivative of the filter response to a step input!

In the laboratory, the input $10\,u(t)$ was applied to the filter and the output voltage was measured using a digital oscilloscope. Data points for time and $v_o(t)$ were acquired every 50 μs over the interval 0 to 50 ms; that is, 1,000 data samples. The digital oscilloscope formats the data as a text file, which can be transferred to a personal computer where the data can be processed. [In other words, we can find our derivative in Eq. (13.29), $dv_o(t)/dt$.] The results are shown in Table 13.3. The second and third columns in the table show the elapsed time and the output voltage for the first few data samples. To produce $h(t)$, the derivative was approximated in software using the simple algorithm,

$$\frac{dv_o(t)}{dt} \approx \frac{\Delta V_o}{\Delta t} = \frac{V_o[(n+1)T_S] - V_o[nT_S]}{T_S}$$

where T_S is the sample time, 50 μs, and n is the sample number. Results for $h(t)$ are shown in the fourth column of the table. At this point, $h(t)$ exists as a table of data points and the filter is now modeled.

To test our model, $h(t)$, we let the function $v_{in}(t)$ contain a combination of dc and sinusoid components such as

$$v_{in}(t) = \begin{cases} 1\sin[(2\pi)100t] + 1\sin[(2\pi)1234t] + 4 & 0 \le t < 25\text{ ms} \\ 0 & t \ge 25\text{ ms} \end{cases} \tag{13.30}$$

How will the filter perform? What will the output voltage look like? To find out, we must convolve $h(t)$ and $v_{in}(t)$. A data file for $v_{in}(t)$ can be created by simply evaluating the function in Eq. (13.30) every 50 μs. This convolution can be performed using any convenient computational method.

TABLE 13.3 The first five data samples of the step response and the evaluation of $h(t)$

N	TIME(s)	STEP RESPONSE (V)	$h(t)$
0	0.00E+00	0.00E+00	3.02E+02
1	5.00E−05	1.51E−01	8.98E+02
2	1.00E−04	6.00E−01	9.72E+02
3	1.50E−04	1.09E+00	9.56E+02
4	2.00E−04	1.56E+00	9.38E+02

Figure 13.4

Plots of input and output waveforms reveal the nature of the band-pass filter—particularly, attenuation of dc and higher-frequency components.

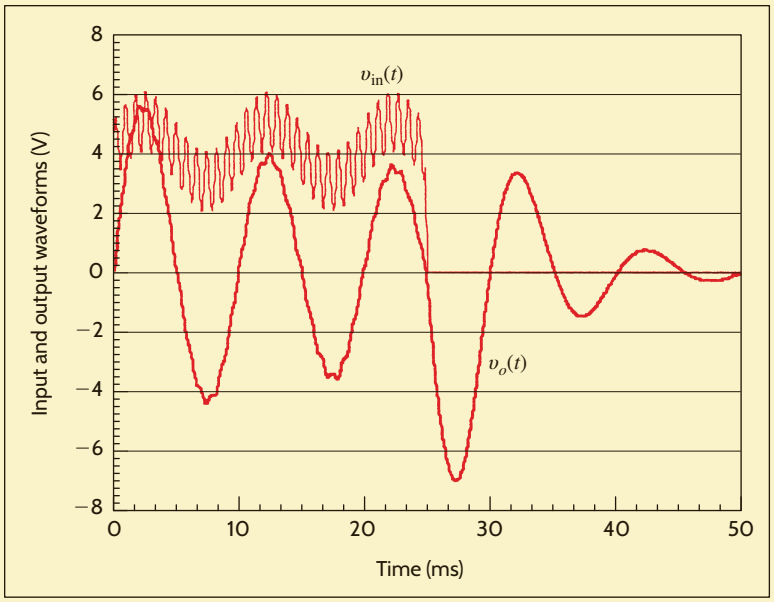

Plots of the resulting $v_o(t)$ and $v_{in}(t)$ are shown in **Fig. 13.4**. An examination of the output waveform indicates that the 100-Hz component of $v_{in}(t)$ is amplified, whereas the dc and 1234-Hz components are attenuated. That is, $v_o(t)$ has an amplitude of approximately 3 V and an average value of near zero. Indeed, the circuit performs as a band-pass filter. Remember that these waveforms are not measured; they are simulation results obtained from our model, $h(t)$.

13.7 Initial-Value and Final-Value Theorems

Suppose that we wish to determine the initial or final value of a circuit response in the time domain from the Laplace transform of the function in the s-domain without performing the inverse transform. If we determine the function $f(t) = \mathcal{L}^{-1}[\mathbf{F}(s)]$, we can find the initial value by evaluating $f(t)$ as $t \to 0$ and the final value by evaluating $f(t)$ as $t \to \infty$. It would be very convenient, however, if we could simply determine the initial and final values from $\mathbf{F}(s)$ without having to perform the inverse transform. The initial- and final-value theorems allow us to do just that.

The *initial-value theorem* states that

$$\lim_{t\to 0} f(t) = \lim_{s\to\infty} s\mathbf{F}(s) \qquad \textbf{13.31}$$

provided that $f(t)$ and its first derivative are transformable.

The proof of this theorem employs the Laplace transform of the function $df(t)/dt$:

$$\int_0^\infty \frac{df(t)}{dt} e^{-st}\, dt = s\mathbf{F}(s) - f(0)$$

Taking the limit of both sides as $s \to \infty$, we find that

$$\lim_{s\to\infty} \int_0^\infty \frac{df(t)}{dt} e^{-st}\, dt = \lim_{s\to\infty} [s\mathbf{F}(s) - f(0)]$$

and since

$$\int_0^\infty \frac{df(t)}{dt} \lim_{s\to\infty} e^{-st}\, dt = 0$$

then

$$f(0) = \lim_{s\to\infty} s\mathbf{F}(s)$$

which is, of course,

$$\lim_{t\to 0} f(t) = \lim_{s\to\infty} s\mathbf{F}(s)$$

The *final-value theorem* states that

$$\lim_{t\to\infty} f(t) = \lim_{s\to 0} s\mathbf{F}(s) \qquad \textbf{13.32}$$

provided that $f(t)$ and its first derivative are transformable and that $f(\infty)$ exists. This latter requirement means that the poles of $\mathbf{F}(s)$ must have negative real parts with the exception that there can be a simple pole at $s = 0$.

The proof of this theorem also involves the Laplace transform of the function $df(t)/dt$:

$$\int_0^\infty \frac{df(t)}{dt} e^{-st}\, dt = s\mathbf{F}(s) - f(0)$$

Taking the limit of both sides as $s \to 0$ gives us

$$\lim_{s\to 0} \int_0^\infty \frac{df(t)}{dt} e^{-st}\, dt = \lim_{s\to 0} [s\mathbf{F}(s) - f(0)]$$

Therefore,

$$\int_0^\infty \frac{df(t)}{dt}\, dt = \lim_{s\to 0} [s\mathbf{F}(s) - f(0)]$$

and

$$f(\infty) - f(0) = \lim_{s\to 0} s\mathbf{F}(s) - f(0)$$

and hence,

$$f(\infty) = \lim_{t\to\infty} f(t) = \lim_{s\to 0} s\mathbf{F}(s)$$

EXAMPLE 13.13

Let us determine the initial and final values for the function

$$\mathbf{F}(s) = \frac{10(s+1)}{s(s^2+2s+2)}$$

and corresponding time function

$$f(t) = 5 + 5\sqrt{2}\, e^{-t} \cos(t - 135°)u(t)$$

SOLUTION

Applying the initial-value theorem, we have

$$\begin{aligned} f(0) &= \lim_{s\to\infty} s\mathbf{F}(s) \\ &= \lim_{s\to\infty} \frac{10(s+1)}{s^2+2s+2} \\ &= 0 \end{aligned}$$

The poles of $\mathbf{F}(s)$ are $s = 0$ and $s = -1 \pm j1$, so the final-value theorem is applicable. Thus,

$$\begin{aligned} f(\infty) &= \lim_{s\to\infty} s\mathbf{F}(s) \\ &= \lim_{s\to 0} \frac{10(s+1)}{s^2+2s+2} \\ &= 5 \end{aligned}$$

Note that these values could be obtained directly from the time function $f(t)$.

13.8 Solving Differential Equations with Laplace Transforms

As a prelude to Chapter 14, in which we will employ the power and versatility of the Laplace transform in a wide variety of circuit analysis problems, we will now demonstrate how the techniques outlined in this chapter can be used in the solution of a circuit problem via the differential equation that describes the network.

EXAMPLE 13.14

Consider the network shown in **Fig. 13.5a**. Assume that the network is in steady state prior to $t = 0$. Let us find the current $i(t)$ for $t > 0$.

SOLUTION

In steady state prior to $t = 0$, the network is as shown in **Fig. 13.5b**, since the inductor acts like a short circuit to dc and the capacitor acts like an open circuit to dc. From Fig. 13.5b we note that $i(0) = 4$ A and $v_C(0) = 4$ V. For $t > 0$, the KVL equation for the network is

$$12u(t) = 2i(t) + 1\frac{di(t)}{dt} + \frac{1}{0.1}\int_0^t i(x)\,dx + v_C(0)$$

Using the results of Example 13.1 and properties 7 and 10, the transformed expression becomes

$$\frac{12}{s} = 2\mathbf{I}(s) + s\mathbf{I}(s) - i(0) + \frac{10}{s}\mathbf{I}(s) + \frac{v_C(0)}{s}$$

Using the initial conditions, we find that the equation becomes

$$\frac{12}{s} = \mathbf{I}(s)\left(2 + s + \frac{10}{s}\right) - 4 + \frac{4}{s}$$

or

$$\mathbf{I}(s) = \frac{4(s+2)}{s^2 + 2s + 10} = \frac{4(s+2)}{(s+1-j3)(s+1+j3)}$$

and then

$$K_1 = \left.\frac{4(s+2)}{s+1+j3}\right|_{s=-1+j3}$$
$$= 2.11\underline{/-18.4^\circ}$$

Therefore,

$$i(t) = 2(2.11)e^{-t}\cos(3t - 18.4^\circ)u(t)\text{ A}$$

Note that this expression satisfies the initial condition $i(0) = 4$ A.

In the introduction to this chapter, we stated that the Laplace transform would yield both the natural and forced responses for a circuit. Our solution to this problem contains only one term. Is it the forced response or the natural response? Remember that the forced response always has the same form as the forcing function or source. The source for this problem is a dc voltage source, so the forced response should be a constant. In fact, the forced response is zero for our circuit, and the natural response is the damped cosine function. Does a zero forced response make sense? Yes! If we look at our circuit, the capacitor is going to charge up to the source voltage. Once the capacitor voltage reaches the source voltage, the current will become zero.

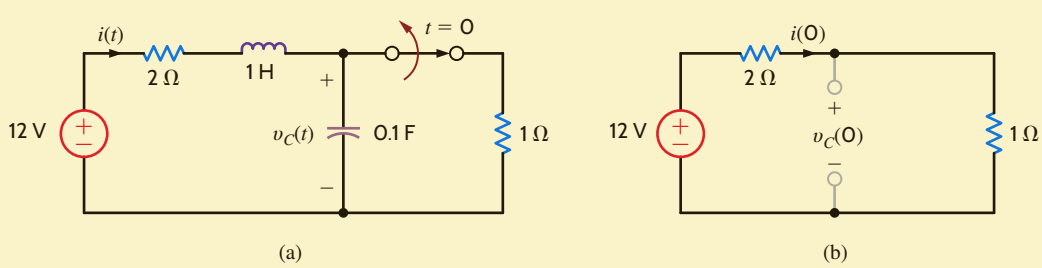

Figure 13.5 Circuits used in Example 13.14.

LEARNING ASSESSMENTS

E13.14 Find the initial and final values of the function $f(t)$ if $\mathbf{F}(s) = \mathcal{L}[f(t)]$ is given by the expression

$$\mathbf{F}(s) = \frac{(s+1)^2}{s(s+2)(s^2+2s+2)}$$

ANSWER:
$f(0) = 0$ and $f(\infty) = \frac{1}{4}$.

E13.15 Find the initial and final values of the time function $f(t)$ if $\mathbf{F}(s) = \dfrac{8s^2 - 20s + 500}{s(s^2 + 4s + 50)}$.

ANSWER:
$f(0) = 8$; $f(\infty) = 10$.

E13.16 Use the Laplace transform to find $y(t)$ if

$$\frac{dy}{dt} + 4y(t) + 4\int_0^t y(x)dx = 10u(t),\ y(0) = 10$$

ANSWER:
$y(t) = (10e^{-2t} - 10te^{-2t})u(t)$.

PROBLEM-SOLVING STRATEGY

THE LAPLACE TRANSFORM AND TRANSIENT CIRCUITS

STEP 1. Assume that the circuit has reached steady state before a switch is moved. Draw the circuit valid for $t = 0^-$ replacing capacitors with open circuits and inductors with short circuits. Solve for the initial conditions: voltages across capacitors and currents flowing through inductors. Remember that

$v_C(0-) = v_C(0+) = v_C(0)$ and $i_L(0-) = i_L(0+) = i_L(0)$.

STEP 2. Draw the circuit valid for $t > 0$. Use circuit analysis techniques to determine the differential or integrodifferential equation that describes the behavior of the circuit.

STEP 3. Convert this differential/integrodifferential equation to an algebraic equation using the Laplace transform.

STEP 4. Solve this algebraic equation for the variable of interest. Your result will be a ratio of polynomials in the complex variable s.

STEP 5. Perform an inverse Laplace transform to solve for the circuit response in the time domain.

LEARNING ASSESSMENTS

E13.17 Assuming that the network in Fig. E13.17 is in steady state prior to $t = 0$, find $i(t)$ for $t > 0$.

ANSWER:
$i(t) = (3 - e^{-2t})u(t)$ A.

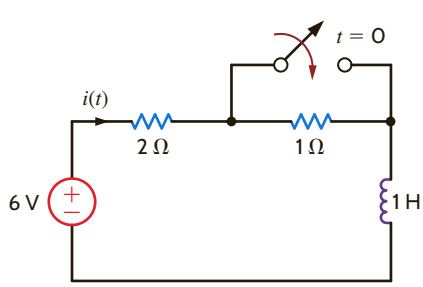

Figure E13.17

E13.18 In the circuit in Fig. E3.18, the switch opens at $t = 0$. Use Laplace transforms to find $v_o(t)$ for $t > 0$.

ANSWER:
$v_o(t) = (12 - 5e^{-66.67t})u(t)$ V.

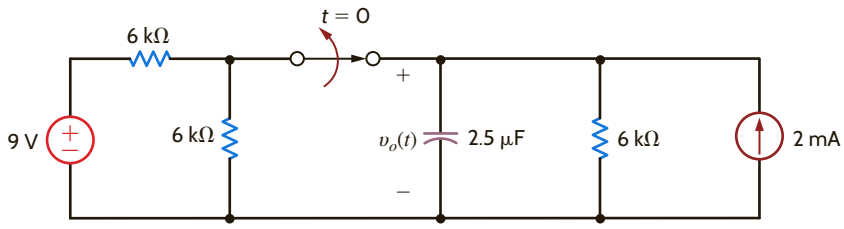

Figure E13.18

E13.19 In the circuit in Fig. E3.19, the switch opens at $t = 0$. Use Laplace transforms to find $i(t)$ for $t > 0$.

ANSWER:
$i(t) = (-0.274e^{-0.172t} + 9.274e^{-5.828t})u(t)$ A.

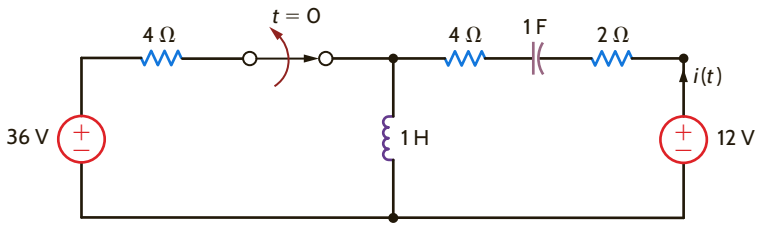

Figure E13.19

SUMMARY

- In applying the Laplace transform, we convert an integrodifferential equation in the time domain to an algebraic equation, which includes initial conditions, in the s-domain. We solve for the unknowns in the s-domain and convert the results back to the time domain.
- The Laplace transform is defined by the expression

$$\mathcal{L}[f(t)] = \mathbf{F}(s) = \int_0^\infty f(t)e^{-st}\,dt$$

- Laplace transform pairs, as listed in Table 13.1, can be used to convert back and forth between the time and frequency domains.
- The Laplace transform properties, as listed in Table 13.2, are useful in performing the Laplace transform and its inverse.
- The partial fraction expansion of a function in the s-domain permits the use of the transform pairs in Table 13.1 and the properties in Table 13.2 to convert the function to the time domain.
- The convolution of two functions in the time domain corresponds to a simple multiplication of the two functions in the s-domain.
- The initial and final values of a time-domain function can be obtained from its Laplace transform in the frequency domain.

PROBLEMS

13.1 Use the time-shifting theorem to determine $\mathcal{L}[f(t)]$, where $f(t) = [t - 1 + e^{-(t-1)}]\,u(t - 1)$.

13.2 If $f(t) = te^{-(t-a)}u(t - a) - e^{-t}u(t - a)$, find $\mathbf{F}(s)$.

13.3 Use the time-shifting theorem to determine $\mathcal{L}[f(t)]$, where $f(t) = [e^{-(t-2)} - e^{-2(t-2)}]\,u(t - 2)$.

13.4 Use property number 7 to find $\mathcal{L}[f(t)]$ if $f(t) = te^{-at}u(t - 1)$.

13.5 Use property number 5 to find $\mathcal{L}[f(t)]$ if $f(t) = e^{-at}u(t - 1)$.

13.6 Find the Laplace transform of the function $f(t) = e^{-at}\,\delta(t - 1)$.

13.7 If $f(t) = e^{-at}\sin \omega t$, show that $\mathbf{F}(s) = \dfrac{\omega}{(s + a)^2 + \omega^2}$.

13.8 If $f(t) = e^{-at}$, show that $\mathbf{F}(s) = \dfrac{1}{(s + a)}$.

13.9 Find the Laplace transform of the function $f(t) = te^{-at}\sin(\omega t)\,\delta(t - 4)$.

13.10 Find $\mathbf{F}(s)$ if $f(t) = e^{-at}\sin \omega t\, u(t - 1)$.

13.11 Find $\mathbf{F}(s)$ if $f(t) = te^{-at}\,u(t - 4)$.

13.12 Use the results of property 3 and the fact that if $f(t) = e^{-t}\sin t$, then $\mathbf{F}(s) = 1/(s + 1)^2 + 1$ to find the Laplace transform of $f(t) = e^{-2t}\sin 2t$.

13.13 Find $\mathcal{L}[f(t)]$ if $f(t) = t^2e^{-at}\,u(t - 2)$.

13.14 If $f(t) = t \sin(\omega t)u(t-1)$, find $\mathbf{F}(s)$.

13.15 If $\mathbf{F}(s) = (s+1)^2(s+3)^2/(s+2)(s+4)$, find $f(t)$.

13.16 If $\mathbf{F}(s) = (s+2)^2/(s+1)(s+3)$, find $f(t)$.

13.17 Given the following functions $\mathbf{F}(s)$, find the inverse Laplace transform of each function.

(a) $\mathbf{F}(s) = \dfrac{2(s+1)}{(s+2)(s+3)}$

(b) $\mathbf{F}(s) = \dfrac{10(s+2)}{(s+1)(s+4)}$

(c) $\mathbf{F}(s) = \dfrac{s^2+2s+3}{s(s+1)(s+2)}$

13.18 Given the following functions $\mathbf{F}(s)$, find $f(t)$.

(a) $\mathbf{F}(s) = \dfrac{s+1}{(s+2)(s+6)}$

(b) $\mathbf{F}(s) = \dfrac{24}{(s+2)(s+3)}$

(c) $\mathbf{F}(s) = \dfrac{4}{(s+3)(s+4)}$

(d) $\mathbf{F}(s) = \dfrac{10s}{(s+1)(s+6)}$

13.19 Given the following functions $\mathbf{F}(s)$, find $f(t)$.

(a) $\mathbf{F}(s) = \dfrac{s^2+7s+12}{(s+2)(s+4)(s+6)}$

(b) $\mathbf{F}(s) = \dfrac{(s+3)(s+6)}{s(s^2+10s+24)}$

(c) $\mathbf{F}(s) = \dfrac{s^2+5s+12}{(s+2)(s+4)(s+6)}$

(d) $\mathbf{F}(s) = \dfrac{(s+3)(s+6)}{s(s^2+8s+12)}$

13.20 Given the following functions $\mathbf{F}(s)$, find $f(t)$.

(a) $\mathbf{F}(s) = \dfrac{s+3}{s(s+2)^2}$

(b) $\mathbf{F}(s) = \dfrac{s+6}{s(s+2)^3}$

13.21 Given the following functions $\mathbf{F}(s)$, find the inverse Laplace transform of each function.

(a) $\mathbf{F}(s) = \dfrac{s+6}{s^2(s+2)}$

(b) $\mathbf{F}(s) = \dfrac{s+4}{(s+1)^2(s+3)}$

13.22 Given the following functions $\mathbf{F}(s)$, find $f(t)$.

(a) $\mathbf{F}(s) = \dfrac{s+8}{s^2(s+4)}$

(b) $\mathbf{F}(s) = \dfrac{1}{s^2(s+1)^2}$

13.23 Find $f(t)$ if $\mathbf{F}(s)$ is given by the expression

$$\mathbf{F}(s) = \frac{(s+1)^2}{s(s+2)(s^2+2s+2)}$$

13.24 Find the inverse Laplace transform of $\mathbf{F}(s)$ where

$$\mathbf{F}(s) = \frac{e^{-s}}{s^2+2s+2}$$

13.25 Find the inverse Laplace transform of the function

$$\mathbf{F}(s) = \frac{e^{-s}}{s^2(s^2+1)(s^2+4)}$$

13.26 Given the following functions $\mathbf{F}(s)$, find $f(t)$.

(a) $\mathbf{F}(s) = \dfrac{s+1}{s(s+2)(s+3)}$

(b) $\mathbf{F}(s) = \dfrac{s^2+s+1}{s(s+1)(s+2)}$

13.27 Given the following functions $\mathbf{F}(s)$, find $f(t)$.

(a) $\mathbf{F}(s) = \dfrac{s^2+4s+8}{(s+1)(s+4)^2}$

(b) $\mathbf{F}(s) = \dfrac{s+4}{s^2}$

13.28 Given the following functions $\mathbf{F}(s)$, find $f(t)$.

(a) $\mathbf{F}(s) = \dfrac{s+4}{(s+2)^2}$

(b) $\mathbf{F}(s) = \dfrac{s+6}{s(s+1)^2}$

13.29 Given the following functions $\mathbf{F}(s)$, find $f(t)$.

(a) $\mathbf{F}(s) = \dfrac{10}{s^2+2s+2}$

(b) $\mathbf{F}(s) = \dfrac{10(s+2)}{s^2+4s+5}$

13.30 Given the following functions $\mathbf{F}(s)$, find the inverse Laplace transform of each function.

(a) $\mathbf{F}(s) = \dfrac{10(s+1)}{s^2+2s+2}$

(b) $\mathbf{F}(s) = \dfrac{s+1}{s(s^2+4s+5)}$

13.31 Given the following functions $\mathbf{F}(s)$, find $f(t)$.

(a) $\mathbf{F}(s) = \dfrac{s(s+6)}{(s+3)(s^2+6s+18)}$

(b) $\mathbf{F}(s) = \dfrac{(s+4)(s+8)}{s(s^2+8s+32)}$

13.32 Given the following functions $\mathbf{F}(s)$, find $f(t)$.

(a) $\mathbf{F}(s) = \dfrac{(s+1)(s+3)}{(s+2)(s^2+2s+2)}$

(b) $\mathbf{F}(s) = \dfrac{(s+2)^2}{s^2+4s+5}$

13.33 Given the following functions $\mathbf{F}(s)$, find $f(t)$.

(a) $\mathbf{F}(s) = \dfrac{(s+6)}{(s+3)(s^2+6s+16)}$

(b) $\mathbf{F}(s) = \dfrac{(s+4)(s+8)}{s(s^2+4s+8)}$

13.34 Given the following functions $\mathbf{F}(s)$, find $f(t)$.

(a) $\mathbf{F}(s) = \dfrac{6s+12}{(s^2+4s+5)(s^2+4s+8)}$

(b) $\mathbf{F}(s) = \dfrac{s(s+2)}{s^2+2s+2}$

13.35 Find the inverse Laplace transform of the following functions.

(a) $\mathbf{F}(s) = \dfrac{e^{-s}}{s+1}$

(b) $\mathbf{F}(s) = \dfrac{1-e^{-2s}}{s}$

(c) $\mathbf{F}(s) = \dfrac{1-e^{-s}}{s+2}$

13.36 Find $f(t)$ if $\mathbf{F}(s)$ is given by the following functions:

(a) $\mathbf{F}(s) = \dfrac{2(s+1)e^{-s}}{(s+2)(s+4)}$

(b) $\mathbf{F}(s) = \dfrac{10(s+2)e^{-2s}}{(s+1)(s+4)}$

(c) $\mathbf{F}(s) = \dfrac{se^{-s}}{(s+4)(s+8)}$

13.37 Find the inverse Laplace transform of the following functions.

(a) $\mathbf{F}(s) = \dfrac{(s+3)e^{-s}}{s(s+2)}$

(b) $\mathbf{F}(s) = \dfrac{e^{-10s}}{(s+2)(s+3)}$

(c) $\mathbf{F}(s) = \dfrac{(s^2+2s+1)e^{-2s}}{s(s+1)(s+2)}$

(d) $\mathbf{F}(s) = \dfrac{(s+1)e^{-4s}}{s^2(s+2)}$

13.38 Find $f(t)$ if $\mathbf{F}(s)$ is given by the following function:

$$\mathbf{F}(s) = \frac{(s+1)e^{-s}}{s(s+2)(s^2+2s+2)}$$

13.39 Find the inverse Laplace transform of the function

$$\mathbf{F}(s) = \frac{10s(s+2)e^{-4s}}{(s+1)^2(s^2+2s+2)}$$

13.40 Find $f(t)$ if $\mathbf{F}(s)$ is given by the expression

$$\mathbf{F}(s) = \frac{s^2e^{-2s}}{(s^2+1)(s+1)(s^2+2s-2)}$$

13.41 Use Laplace transforms to solve the following differential equations.

(a) $\dfrac{dy(t)}{dt} + 3y(t) = e^{-t}, y(0) = 1$

(b) $\dfrac{dy(t)}{dt} + 4y(t) = 2u(t), y(0) = 2$

13.42 Solve the following integrodifferential equation using Laplace transforms.

$$y(t) + 4\int_0^t y(\lambda)e^{-4(t-\lambda)}\,d(\lambda) = 2e^{-t} \quad t > 0$$

13.43 Solve the following integrodifferential equation using Laplace transforms.

$$\frac{dy(t)}{dt} + 2y(t) + \int_0^t y(\lambda)d\lambda = 1 - e^{-2t}, \quad y(0) = 0, \quad t > 0$$

13.44 Solve the following differential equations using Laplace transforms.

(a) $\dfrac{dx(t)}{dt} + 4x(t) = e^{-2t}, \quad x(0) = 1$

(b) $\dfrac{dx(t)}{dt} + 6x(t) = 4u(t), \quad x(0) = 2$

13.45 Solve the following differential equations using Laplace transforms.

(a) $\dfrac{d^2y(t)}{dt^2} + \dfrac{2dy(t)}{dt} + y(t) = e^{-2t}, y(0) = y'(0) = 0$

(b) $\dfrac{d^2y(t)}{dt^2} + \dfrac{4y(t)}{dt} + 4y(t) = u(t), y(0) = 0, y'(0) = 1$

13.46 Use Laplace transforms to solve the following integro-differential equation.

$$\frac{dy(t)}{dt} + 2y(t) + \int_o^t y(\lambda)e^{-2(t-\lambda)}\,d(\lambda) = 4u(t), y(0) = 1, t > 0$$

13.47 Find the inverse Laplace transform of the function $\mathbf{F}(s)$ using the convolution integral.

$$\mathbf{F}(s) = \frac{1}{s(s+2)}$$

13.48 Find $f(t)$ using the convolution integral if

$$\mathbf{F}(s) = \frac{s+2}{s^2(s+1)}$$

13.49 Find $f(t)$ using convolution if $\mathbf{F}(s)$ is

$$\mathbf{F}(s) = \frac{1}{(s+1)(s+2)}$$

13.50 Find $f(t)$ using convolution if $\mathbf{F}(s)$ is

(a) $\mathbf{F}(s) = \dfrac{1}{(s+1)(s+4)}$

(b) $\mathbf{F}(s) = \dfrac{10}{(s+1)(s+3)^2}$

13.51 Find the initial and final values of $f(t)$ if $\mathbf{F}(s)$ is given as

(a) $\mathbf{F}(s) = \dfrac{s+3}{s(s+2)}$

(b) $\mathbf{F}(s) = \dfrac{2(s^2+2s+2)}{(s+1)(s^2+2s+6)}$

(c) $\mathbf{F}(s) = \dfrac{s^2+2s+1}{(s+4)(s+2)(s+6)}$

13.52 Determine the initial and final values of $f(t)$ if $\mathbf{F}(s)$ is given by the expressions

(a) $\mathbf{F}(s) = \dfrac{2(s+2)}{s(s+1)}$

(b) $\mathbf{F}(s) = \dfrac{2(s^2+2s+6)}{(s+1)(s+2)(s+3)}$

(c) $\mathbf{F}(s) = \dfrac{2s^2}{(s+1)(s^2+2s+2)}$

13.53 Find the final values of the time function $f(t)$ given that

(a) $\mathbf{F}(s) = \dfrac{10(s+1)}{(s+2)(s-3)}$

(b) $\mathbf{F}(s) = \dfrac{10}{s^2+4}$

13.54 Find the final values of the time function $f(t)$ given that

(a) $\mathbf{F}(s) = \dfrac{10(s+6)}{(s+2)\,(s+3)}$

(b) $\mathbf{F}(s) = \dfrac{2}{s^2+4s+8}$

13.55 Find the initial and final values of the time function $f(t)$ if $\mathbf{F}(s)$ is given as

(a) $\mathbf{F}(s) = \dfrac{10(s+2)}{(s+1)(s+4)}$

(b) $\mathbf{F}(s) = \dfrac{s^2+2s+2}{(s+6)(s^3+4s^2+8s+4)}$

(c) $\mathbf{F}(s) = \dfrac{2s}{s^2+2s+3}$

13.56 Find the initial and final values of $f(t)$ if $\mathbf{F}(s)$ is given as

(a) $\mathbf{F}(s) = \dfrac{s+4}{s(s+12)(s+3)}$

(b) $\mathbf{F}(s) = \dfrac{s+3}{s(s^2+5s+4)}$

(c) $\mathbf{F}(s) = \dfrac{s^2+2s+2}{(s^2+4s+5)(s+3)}$

13.57 In the network in Fig. P13.57, the switch opens at $t = 0$. Use Laplace transforms to find $v_o(t)$ for $t > 0$.

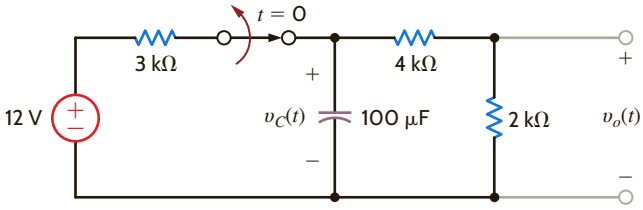

Figure P13.57

13.58 In the circuit in Fig. P13.58, the switch moves from position 1 to position 2 at $t = 0$. Use Laplace transforms to find $v(t)$ for $t > 0$.

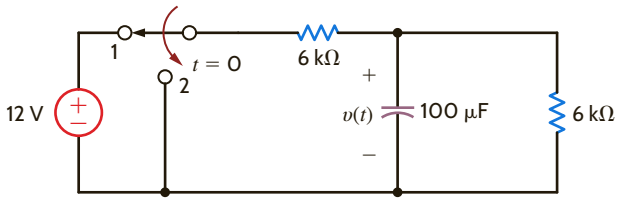

Figure P13.58

13.59 In the network in Fig. P13.59, the switch opens at $t = 0$. Use Laplace transforms to find $i(t)$ for $t > 0$.

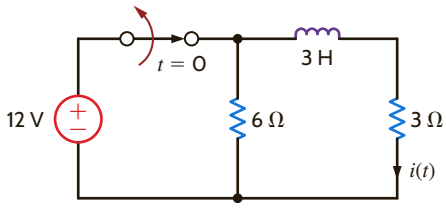

Figure P13.59

13.60 In the network in Fig. P13.60, the switch opens at $t = 0$. Use Laplace transforms to find $i_L(t)$ for $t > 0$.

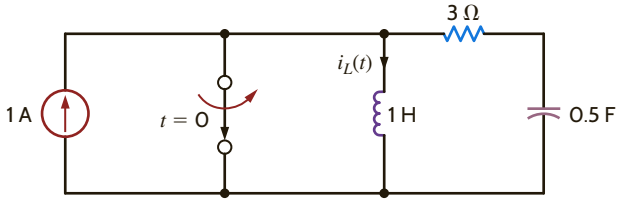

Figure P13.60

13.61 The switch in the circuit in Fig. P13.61 has been closed for a long time and is opened at $t = 0$. Find $i(t)$ for $t > 0$ using Laplace transforms.

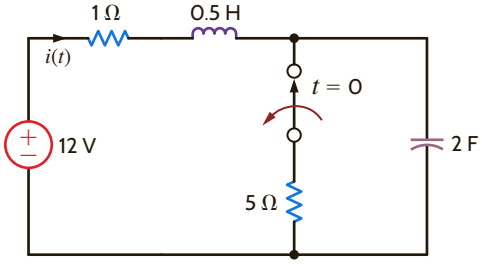

Figure P13.61

13.62 The switch in the circuit in Fig. P13.62 opens at $t = 0$. Find $i(t)$ for $t > 0$ using Laplace transforms.

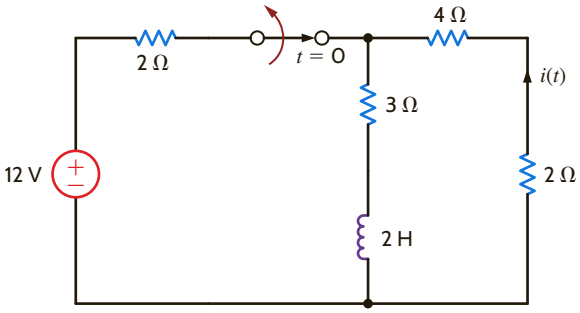

Figure P13.62

13.63 The switch in the circuit in Fig. P13.63 has been closed for a long time and is opened at $t = 0$. Find $i(t)$ for $t > 0$, using Laplace transforms.

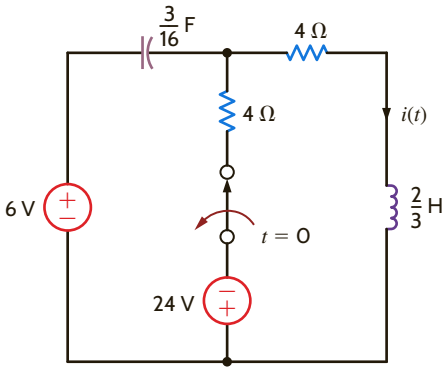

Figure P13.63

13.64 The switch in the circuit in Fig. P13.64 has been closed for a long time and is opened at $t = 0$. Find $i(t)$ for $t > 0$ using Laplace transforms.

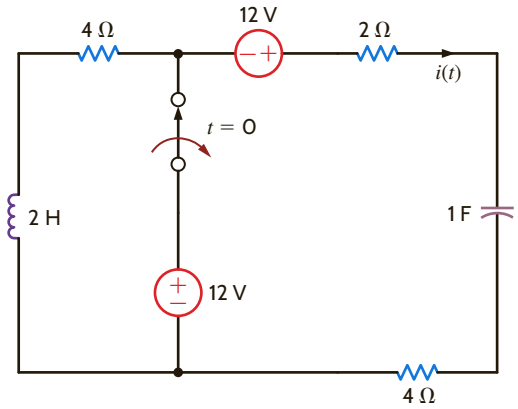

Figure P13.64

13.65 The switch in the circuit in Fig. P13.65 has been closed for a long time and is opened at $t = 0$. Find $i(t)$ for $t > 0$ using Laplace transforms.

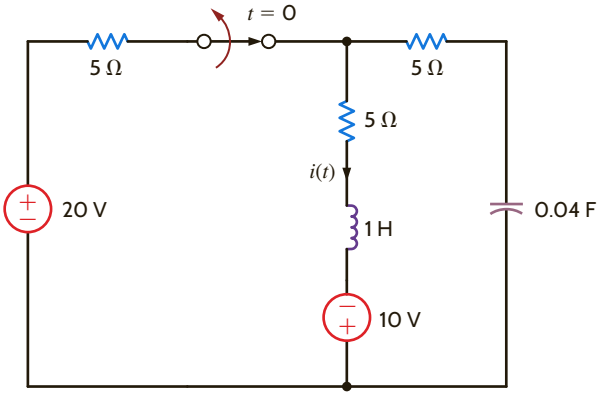

Figure P13.65

13.66 In the circuit shown in Fig. P13.66, switch action occurs at $t = 0$. Determine the voltage $v_o(t)$, $t > 0$ using Laplace transforms.

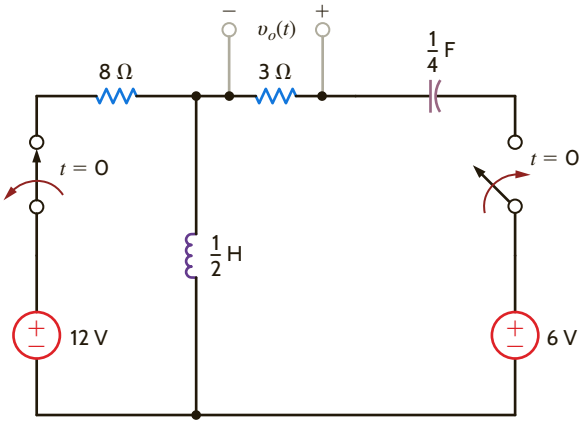

Figure P13.66

TYPICAL PROBLEMS FOUND ON THE FE EXAM

13PFE-1 The output function of a network is expressed using Laplace transforms in the following form:

$$\mathbf{V}_o(s) = \frac{12}{s(s^2 + 3s + 2)}$$

Find the output $v_o(t)$ as a function of time.

a. $[12 + 3e^{-2t} + 4e^{-t}]u(t)$ V

b. $[2 + 4e^{2t} + 8e^{t}]u(t)$ V

c. $[6 + 6e^{-2t} - 12e^{-t}]u(t)$ V

d. $[3 + 2e^{2t} - 6e^{t}]u(t)$ V

13PFE-2 The Laplace transform function representing the output voltage of a network is expressed as

$$\mathbf{V}_o(s) = \frac{120}{s(s + 10)(s + 20)}$$

Determine the value of $v_o(t)$ at $t = 100$ ms.

a. 0.64 V **c.** 0.33 V

b. 0.45 V **d.** 0.24 V

13PFE-3 The Laplace transform function for the output voltage of a network is expressed in the following form:

$$\mathbf{V}_o(s) = \frac{12(s + 2)}{s(s + 1)(s + 3)(s + 4)}$$

Determine the final value of this voltage; that is, $v_o(t)$ as $t \to \infty$.

a. 6 V **c.** 12 V

b. 2 V **d.** 4 V

13PFE-4 The output of a network is expressed as

$$\mathbf{V}_o(s) = \frac{2s}{(s + 1)^2(s + 4)}$$

Determine the output as a function of time.

a. $\left[-\frac{8}{9}e^{-4t} + \frac{8}{9}e^{-t} - \frac{2}{3}te^{-t}\right]u(t)$ V

b. $\left[\frac{3}{4}e^{4t} - \frac{2}{3}te^{-t} + \frac{1}{3}te^{t}\right]u(t)$ V

c. $\left[\frac{2}{3}e^{-4t} + \frac{1}{4}te^{-t} - \frac{1}{3}e^{-t}\right]u(t)$ V

d. $\left[\frac{1}{2}e^{-4t} - \frac{1}{3}e^{-t} + \frac{2}{3}te^{-t}\right]u(t)$ V

13PFE-5 Solve the following differential equation using Laplace transforms:

$$\frac{d^2x(t)}{dt^2} + 6\frac{dx(t)}{dt} + 8x(t) = 2e^{-3t}$$

$$x(0) = 0 \text{ and } \frac{dx(0)}{dt} = 0$$

a. $[2e^{-2t} + e^{-4t} - 3e^{-3t}]u(t)$

b. $[3e^{2t} + e^{-4t} + e^{3t}]u(t)$

c. $[e^{-2t} + e^{-4t} - 2e^{-3t}]u(t)$

d. $[4e^{2t} - e^{4t} - 2e^{3t}]u(t)$

Chapter Fourteen

APPLICATION OF THE LAPLACE TRANSFORM TO CIRCUIT ANALYSIS

THE LEARNING GOALS FOR THIS CHAPTER ARE THAT STUDENTS SHOULD BE ABLE TO:

- Determine the *s*-domain representation of basic circuit elements, including initial conditions.
- Construct the *s*-domain representation for an electric circuit.
- Apply circuit analysis techniques to solve for voltages and currents in an *s*-domain circuit.
- Use the inverse Laplace transform to determine the voltages and currents in the time domain.
- Determine the transfer function for *s*-domain circuits.
- Calculate a circuit's response to a unit step function and an impulse function using a transfer function.
- Determine the steady-state response of a circuit to a sinusoidal source using a transfer function.

EXPERIMENTS THAT HELP STUDENTS DEVELOP AN UNDERSTANDING OF CIRCUIT ANALYSIS USING LAPLACE TRANSFORMS ARE:

- PID Controller: Explore the operation of a simple proportional-integral-differential controller to see how each subcircuit functions to maintain a constant current through a load.
- The Wien-Bridge Oscillator: Predict and verify the frequency of oscillation from the s-domain transfer function both experimentally and via a PSpice simulation.
- Twin T-Notch Filter: Use the transfer function in the s-domain to design a narrow-bandwidth notch-filter circuit.

14.1 Laplace Circuit Solutions

To introduce the utility of the Laplace transform in circuit analysis, let us consider the *RL* series circuit shown in **Fig. 14.1**. In particular, let us find the current, $i(t)$.

Using Kirchhoff's voltage law, we can write the time-domain differential equation,

$$v_S(t) = L\left(\frac{di(t)}{dt}\right) + Ri(t)$$

The complementary differential equation is

$$L\left(\frac{di(t)}{dt}\right) + Ri(t) = 0 \qquad \textbf{14.1}$$

and has the solution

$$i_C(t) = K_C e^{-\alpha t}$$

Substituting $i_C(t)$ into the complementary equation yields the relationship

$$R - \alpha L = 0$$

or

$$\alpha = \frac{R}{L} = 1000$$

The particular solution is of the same form as the forcing function, $v_S(t)$:

$$i_p(t) = K_p$$

Substituting $i_p(t)$ into the original differential equation yields the expression

$$1 = RK_p$$

or

$$K_p = 1/R = 1/100$$

The final solution is the sum of $i_p(t)$ and $i_C(t)$,

$$i(t) = K_p + K_C e^{-\alpha t} = \frac{1}{100} + K_C e^{-1000t}$$

To find K_C, we must use the value of the current at some particular instant of time. For $t < 0$, the unit step function is zero and so is the current. At $t = 0$, the unit step goes to one; however, the inductor forces the current to instantaneously remain at zero. Therefore, at $t = 0$, we can write

$$i(0) = 0 = K_p + K_C$$

or

$$K_C = -K_p = -\frac{1}{100}$$

Thus, the current is

$$i(t) = 10(1 - e^{-1000t})u(t) \text{ mA}$$

Let us now try a different approach to the same problem. Making use of Table 13.2, let us take the Laplace transform of both sides of Eq. (14.1):

$$\mathcal{L}[v_S(t)] = \mathbf{V}_S(s) = L[s\mathbf{I}(s) - i(0)] + R\mathbf{I}(s)$$

Figure 14.1

RL series network.

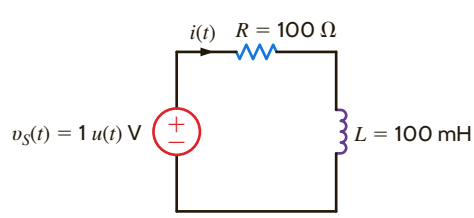

Since the initial value for the inductor $i(0) = 0$, this equation becomes

$$\mathcal{L}[v_S(t)] = \mathbf{V}_S(s) = L[s\mathbf{I}(s)] + R\mathbf{I}(s)$$

Now the circuit is represented not by a time-domain differential equation, but rather by an algebraic expression in the s-domain. Solving for $\mathbf{I}(s)$, we can write

$$\mathbf{I}(s) = \frac{\mathbf{V}_S(s)}{sL + R} = \frac{1}{s[sL + R]}$$

We find $i(t)$ using the inverse Laplace transform. First, let us express $\mathbf{I}(s)$ as a sum of partial products:

$$\mathbf{I}(s) = \frac{1/L}{s\left[s + \frac{R}{L}\right]} = \frac{1}{sR} - \frac{1}{R\left[s + \frac{R}{L}\right]}$$

The inverse transform is simply

$$i(t) = \frac{1}{R}(1 - e^{-Rt/L})$$

Given the circuit element values in Fig. 14.1, the current is

$$i(t) = 10(1 - e^{-1000t})u(t) \text{ mA}$$

which is exactly the same as that obtained using the differential equation approach. Note carefully that the solution using the Laplace transform approach yields the entire solution in one step.

We have shown that the Laplace transform can be used to transform a differential equation into an algebraic equation. Since the voltage–current relationships for resistors, capacitors, and inductors involve only constants, derivatives, and integrals, we can represent and solve any circuit in the s-domain.

14.2 Circuit Element Models

The Laplace transform technique employed earlier implies that the terminal characteristics of circuit elements can be expressed as algebraic expressions in the s-domain. Let us examine these characteristics for the resistor, capacitor, and inductor.

The voltage–current relationship for a resistor in the time domain using the passive sign convention is

$$v(t) = Ri(t) \tag{14.2}$$

Using the Laplace transform, we find that this relationship in the s-domain is

$$\mathbf{V}(s) = R\mathbf{I}(s) \tag{14.3}$$

Therefore, the time-domain and complex frequency-domain representations of this element are as shown in **Fig. 14.2a**.

The time-domain relationships for a capacitor using the passive sign convention are

$$v(t) = \frac{1}{C}\int_0^t i(x)\,dx + v(0) \tag{14.4}$$

$$i(t) = C\frac{dv(t)}{dt} \tag{14.5}$$

The s-domain equations for the capacitor are then

$$\mathbf{V}(s) = \frac{\mathbf{I}(s)}{sC} + \frac{v(0)}{s} \tag{14.6}$$

$$\mathbf{I}(s) = sC\mathbf{V}(s) - Cv(0) \tag{14.7}$$

and hence the s-domain representation of this element is as shown in **Fig. 14.2b**.

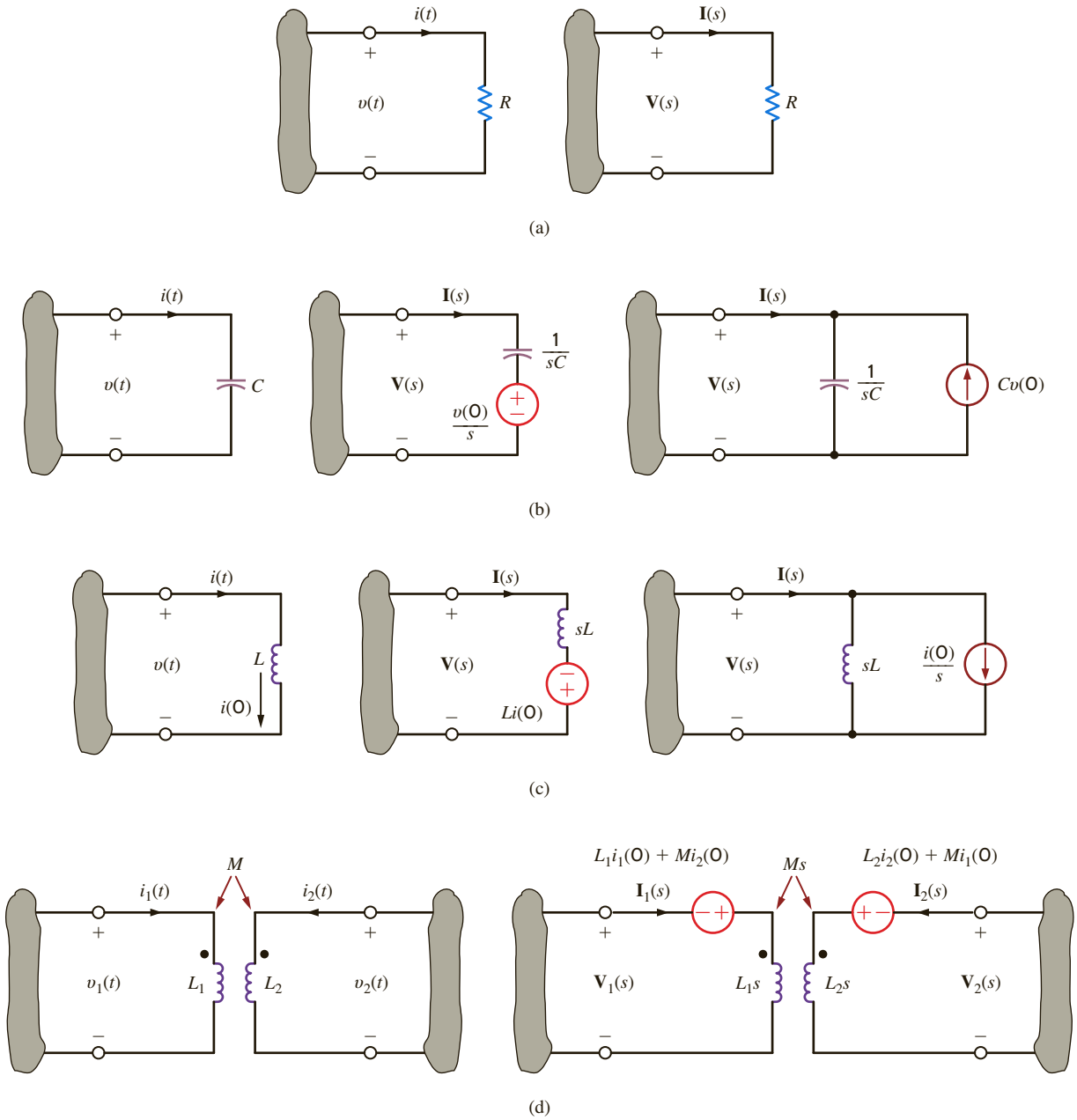

Figure 14.2

Time-domain and s-domain representations of circuit elements.

For the inductor, the voltage–current relationships using the passive sign convention are

$$v(t) = L\frac{di(t)}{dt} \tag{14.8}$$

$$i(t) = \frac{1}{L}\int_0^t v(x)\,dx + i(0) \tag{14.9}$$

The relationships in the s-domain are then

$$\mathbf{V}(s) = sL\mathbf{I}(s) - Li(0) \tag{14.10}$$

$$\mathbf{I}(s) = \frac{\mathbf{V}(s)}{sL} + \frac{i(0)}{s} \tag{14.11}$$

The s-domain representation of this element is shown in **Fig. 14.2c**.

Using the passive sign convention, we find that the voltage–current relationships for the coupled inductors shown in **Fig. 14.2d** are

$$v_1(t) = L_1 \frac{di_1(t)}{dt} + M \frac{di_2(t)}{dt} \qquad \textbf{14.12}$$

$$v_2(t) = L_2 \frac{di_2(t)}{dt} + M \frac{di_1(t)}{dt}$$

The relationships in the s-domain are then

$$\mathbf{V}_1(s) = L_1 s\mathbf{I}_1(s) - L_1 i_1(0) + Ms\mathbf{I}_2(s) - Mi_2(0) \qquad \textbf{14.13}$$

$$\mathbf{V}_2(s) = L_2 s\mathbf{I}_2(s) - L_2 i_2(0) + Ms\mathbf{I}_1(s) - Mi_1(0)$$

Independent and dependent voltage and current sources can also be represented by their transforms; that is,

$$\mathbf{V}_1(s) = \mathscr{L}[v_1(t)] \qquad \textbf{14.14}$$

$$\mathbf{I}_2(s) = \mathscr{L}[i_2(t)]$$

and if $v_1(t) = Ai_2(t)$, which represents a current-controlled voltage source, then

$$\mathbf{V}_1(s) = A\mathbf{I}_2(s) \qquad \textbf{14.15}$$

Note carefully the direction of the current sources and the polarity of the voltage sources in the transformed network that result from the initial conditions. If the polarity of the initial voltage or direction of the initial current is reversed, the sources in the transformed circuit that results from the initial condition are also reversed.

PROBLEM-SOLVING STRATEGY

s-DOMAIN CIRCUITS

STEP 1. Solve for initial capacitor voltages and inductor currents. This may require the analysis of a circuit valid for $t < 0$ drawn with all capacitors replaced by open circuits and all inductors replaced by short circuits.

STEP 2. Draw an s-domain circuit by substituting an s-domain representation for all circuit elements. Be sure to include initial conditions for capacitors and inductors if nonzero.

STEP 3. Use the circuit analysis techniques presented in this textbook to solve for the appropriate voltages and/or currents. The voltages and/or currents will be described by a ratio of polynomials in s.

STEP 4. Perform an inverse Laplace transform to convert the voltages and/or currents back to the time domain.

14.3 Analysis Techniques

Now that we have the s-domain representation for the circuit elements, we are in a position to analyze networks using a transformed circuit.

EXAMPLE 14.1

Given the network in Fig. 14.3a, let us draw the s-domain equivalent circuit and find the output voltage in both the s and time domains.

SOLUTION

The s-domain network is shown in Fig. 14.3b. We can write the output voltage as

$$\mathbf{V}_o(s) = \left[R // \frac{1}{sC}\right]\mathbf{I}_S(s)$$

or

$$\mathbf{V}_o(s) = \left[\frac{1/C}{s + (1/RC)}\right]\mathbf{I}_S(s)$$

Given the element values, $\mathbf{V}_o(s)$ becomes

$$\mathbf{V}_o(s) = \left(\frac{40{,}000}{s+4}\right)\left(\frac{0.003}{s+1}\right) = \frac{120}{(s+4)(s+1)}$$

Expanding $\mathbf{V}_o(s)$ into partial fractions yields

$$\mathbf{V}_o(s) = \frac{120}{(s+4)(s+1)} = \frac{40}{s+1} - \frac{40}{s+4}$$

Performing the inverse Laplace transform yields the time-domain representation

$$v_o(t) = 40[e^{-t} - e^{-4t}]u(t)\ \text{V}$$

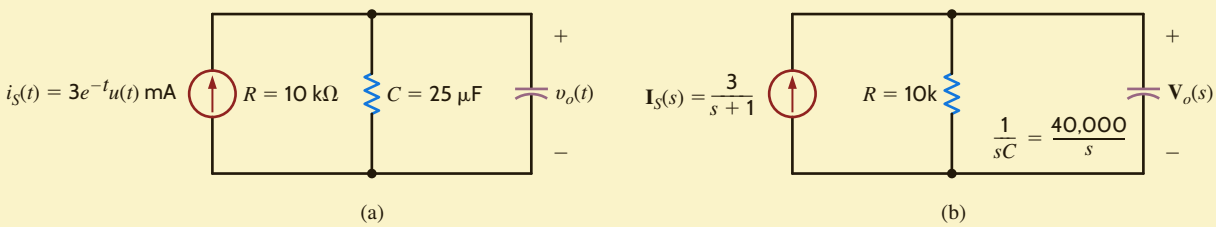

Figure 14.3

Time-domain and s-domain representations of an RC parallel network.

Now that we have demonstrated the use of the Laplace transform in the solution of a simple circuit, let us consider the more general case. Note that in Fig. 14.2 we have shown two models for the capacitor and inductor when initial conditions are present. Let us now consider an example in which we will illustrate the use of these models in deriving both the node and loop equations for the circuit.

EXAMPLE 14.2

Given the circuits in Figs. 14.4a and b, we wish to write the mesh equations in the s-domain for the network in Fig. 14.4a and the node equations in the s-domain for the network in Fig. 14.4b.

SOLUTION

The transformed circuit for the network in Fig. 14.4a is shown in Fig. 14.4c. The mesh equations for this network are

$$\left(R_1 + \frac{1}{sC_1} + \frac{1}{sC_2} + sL_1\right)\mathbf{I}_1(s) - \left(\frac{1}{sC_2} + sL_1\right)\mathbf{I}_2(s) = \mathbf{V}_A(s) - \frac{v_1(0)}{s} + \frac{v_2(0)}{s} - L_1 i_1(0)$$

$$-\left(\frac{1}{sC_2} + sL_1\right)\mathbf{I}_1(s) + \left(\frac{1}{sC_2} + sL_1 + sL_2 + R_2\right)\mathbf{I}_2(s) = L_1 i_1(0) - \frac{v_2(0)}{s} - L_2 i_2(0) + \mathbf{V}_B(s)$$

The transformed circuit for the network in Fig. 14.4b is shown in **Fig. 14.4d**. The node equations for this network are

$$\left(G_1 + \frac{1}{sL_1} + sC_1 + \frac{1}{sL_2}\right)\mathbf{V}_1(s) - \left(\frac{1}{sL_2} + sC_1\right)\mathbf{V}_2(s) = \mathbf{I}_A(s) - \frac{i_1(0)}{s} + \frac{i_2(0)}{s} - C_1 v_1(0)$$

$$-\left(\frac{1}{sL_2} + sC_1\right)\mathbf{V}_1(s) + \left(\frac{1}{sL_2} + sC_1 + G_2 + sC_2\right)\mathbf{V}_2(s) = C_1 v_1(0) - \frac{i_2(0)}{s} - C_2 v_2(0) - \mathbf{I}_B(s)$$

HINT

Note that the equations employ the same convention used in dc analysis.

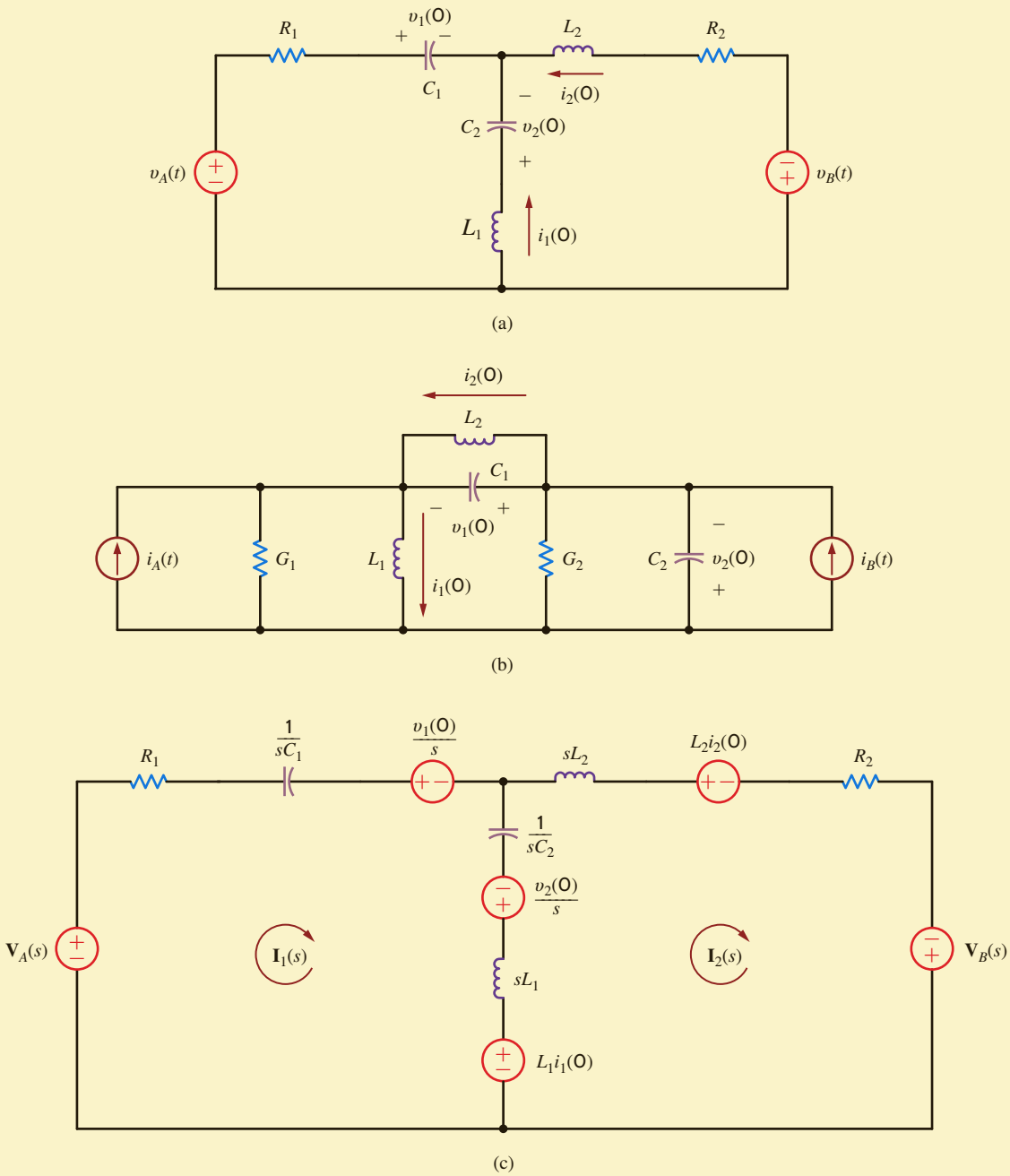

Figure 14.4

Circuits used in Example 14.2.

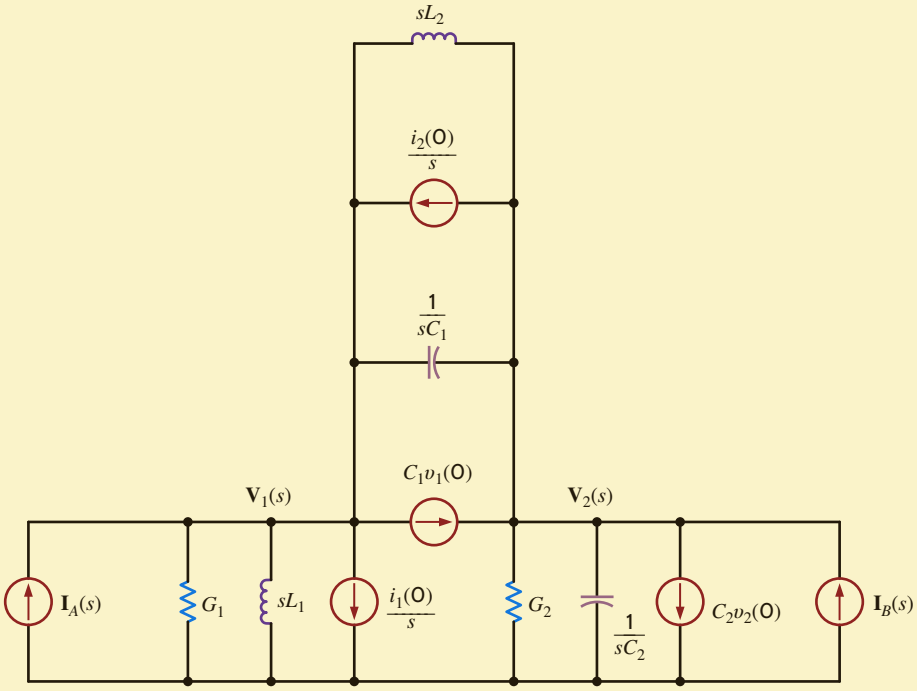

(d)

Figure 14.4
(continued)

Example 14.2 attempts to illustrate the manner in which to employ the two s-domain representations of the inductor and capacitor circuit elements when initial conditions are present. In the following examples, we illustrate the use of a number of analysis techniques in obtaining the complete response of a transformed network. The circuits analyzed have been specifically chosen to demonstrate the application of the Laplace transform to circuits with a variety of passive and active elements.

EXAMPLE 14.3

Let us examine the network in **Fig. 14.5a**. We wish to determine the output voltage $v_o(t)$.

SOLUTION

As a review of the analysis techniques presented earlier in this text, we will solve this problem using nodal analysis, mesh analysis, superposition, source exchange, Thévenin's theorem, and Norton's theorem.

The transformed network is shown in **Fig. 14.5b**. In our employment of nodal analysis, rather than writing KCL equations at the nodes labeled $\mathbf{V}_1(s)$ and $\mathbf{V}_o(s)$, we will use only the former node and use voltage division to find the latter.

KCL at the node labeled $\mathbf{V}_1(s)$ is

$$-\frac{4}{s} + \frac{\mathbf{V}_1(s) - \frac{12}{s}}{s} + \frac{\mathbf{V}_1(s)}{\frac{1}{s} + 2} = 0$$

Solving for $\mathbf{V}_1(s)$ we obtain

$$\mathbf{V}_1(s) = \frac{4(s+3)(2s+1)}{s(s^2+2s+1)}$$

Now employing voltage division,

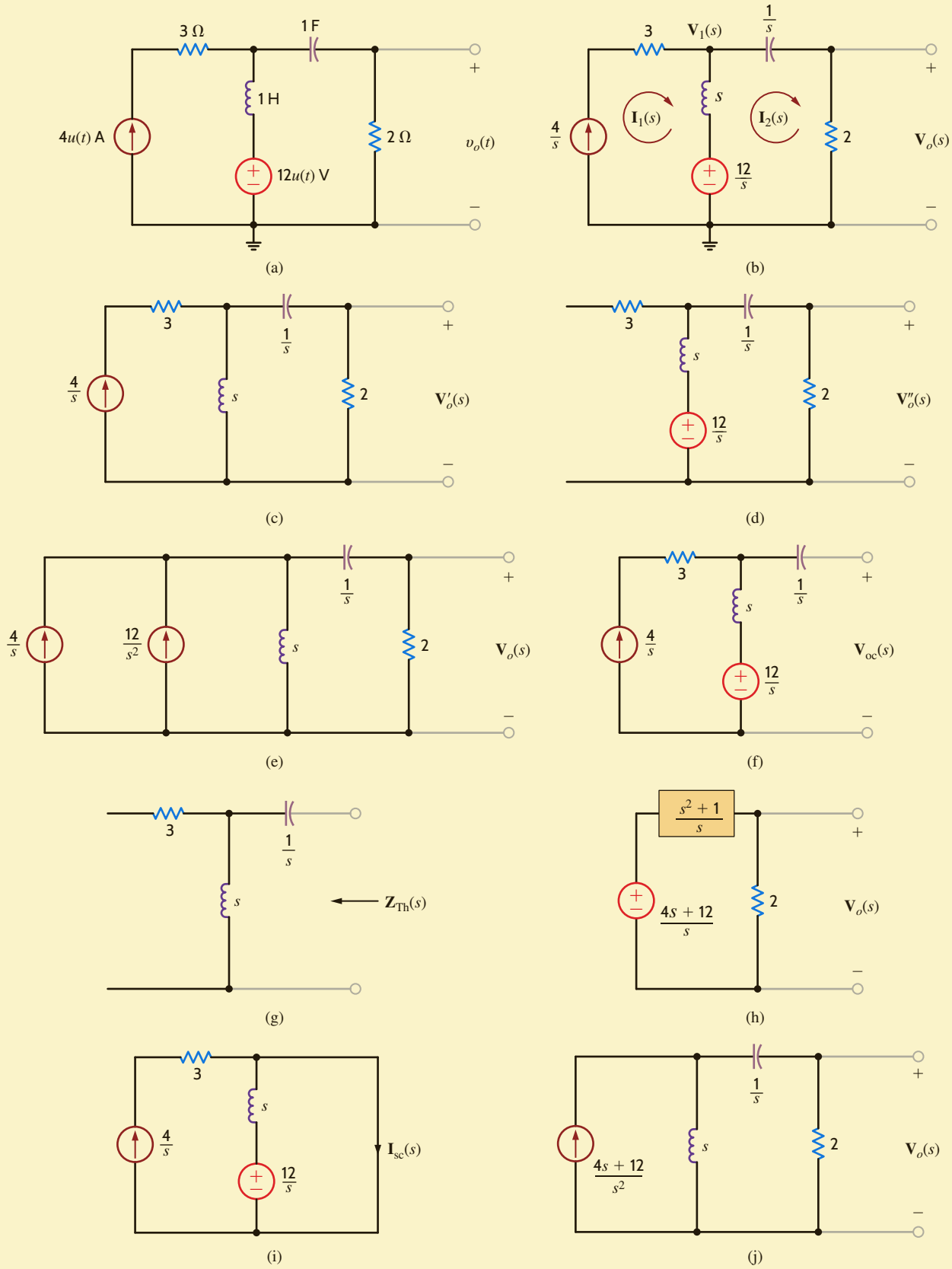

Figure 14.5

Circuits used in Example 14.3.

$$\mathbf{V}_o(s) = \mathbf{V}_1(s)\left[\frac{2}{\frac{1}{s} + 2}\right] = \mathbf{V}_1(s)\left(\frac{2s}{2s + 1}\right)$$

$$= \frac{8(s + 3)}{(s + 1)^2}$$

In our mesh analysis we note that the current $\mathbf{I}_1(s)$ goes through the current source, and therefore KVL for the right-hand loop is

$$\frac{12}{s} - [\mathbf{I}_2(s) - \mathbf{I}_1(s)]s - \frac{\mathbf{I}_2(s)}{s} - 2\mathbf{I}_2(s) = 0$$

However, $\mathbf{I}_1(s) = 4/s$, and hence

$$\mathbf{I}_2(s) = \frac{4(s + 3)}{(s + 1)^2}$$

Therefore,

$$\mathbf{V}_o(s) = \frac{8(s + 3)}{(s + 1)^2}$$

The 3-Ω resistor never enters our equations. Furthermore, it will not enter our other analyses either. Why?

In using superposition, we first consider the current source acting alone as shown in **Fig. 14.5c**. Applying current division, we obtain

$$\mathbf{V}_o'(s) = \left[\frac{\frac{4}{s}(s)}{s + \frac{1}{s} + 2}\right](2)$$

$$= \frac{8s}{s^2 + 2s + 1}$$

With the voltage source acting alone, as shown in **Fig. 14.5d**, we obtain

$$\mathbf{V}_o''(s) = \left[\frac{\frac{12}{s}}{s + \frac{1}{s} + 2}\right](2)$$

$$= \frac{24}{s^2 + 2s + 1}$$

Hence,

$$\mathbf{V}_o(s) = \mathbf{V}_o'(s) + \mathbf{V}_o''(s)$$

$$= \frac{8(s + 3)}{(s + 1)^2}$$

In applying source exchange, we transform the voltage source and series inductor into a current source with the inductor in parallel as shown in **Fig. 14.5e**. Adding the current sources and applying current division yields

$$\mathbf{V}_o(s) = \left(\frac{12}{s^2} + \frac{4}{s}\right)\left[\frac{s}{s + \frac{1}{s} + 2}\right](2)$$

$$= \frac{\left(\frac{12}{s} + 4\right)(2)}{s + \frac{1}{s} + 2}$$

$$\mathbf{V}_o(s) = \frac{8(s + 3)}{(s + 1)^2}$$

To apply Thévenin's theorem, we first find the open-circuit voltage shown in **Fig. 14.5f**. $\mathbf{V}_{oc}(s)$ is then

$$\mathbf{V}_{oc}(s) = \left(\frac{4}{s}\right)(s) + \frac{12}{s}$$
$$= \frac{4s + 12}{s}$$

The Thévenin equivalent impedance derived from **Fig. 14.5g** is

$$\mathbf{Z}_{Th}(s) = \frac{1}{s} + s$$
$$= \frac{s^2 + 1}{s}$$

Now, connecting the Thévenin equivalent circuit to the load produces the circuit shown in **Fig. 14.5h**. Then, applying voltage division, we obtain

$$\mathbf{V}_o(s) = \frac{4s + 12}{s}\left[\frac{2}{\frac{s^2 + 1}{s} + 2}\right]$$
$$= \frac{8(s + 3)}{(s + 1)^2}$$

In applying Norton's theorem, for simplicity we break the network to the right of the first mesh. In this case, the short-circuit current is obtained from the circuit in **Fig. 14.5i**; that is,

$$\mathbf{I}_{sc}(s) = \frac{\frac{12}{s}}{s} + \frac{4}{s}$$
$$= \frac{4s + 12}{s^2}$$

The Thévenin equivalent impedance in this application of Norton's theorem is $\mathbf{Z}_{Th}(s) = s$. Connecting the Norton equivalent circuit to the remainder of the original network yields the circuit in **Fig. 14.5j**. Then

$$\mathbf{V}_o(s) = \frac{4s + 12}{s^2}\left[\frac{s}{s + \frac{1}{s} + 2}\right](2)$$
$$= \frac{8(s + 3)}{(s + 1)^2}$$

Finally, $\mathbf{V}_o(s)$ can now be transformed to $v_o(t)$. $\mathbf{V}_o(s)$ can be written as

$$\mathbf{V}_o(s) = \frac{8(s + 3)}{(s + 1)^2} = \frac{K_{11}}{(s + 1)^2} + \frac{K_{12}}{s + 1}$$

Evaluating the constants, we obtain

$$8(s + 3)\big|_{S = -1} = K_{11}$$
$$16 = K_{11}$$

and

$$\frac{d}{ds}[8(s + 3)]\bigg|_{S = -1} = K_{12}$$
$$8 = K_{12}$$

Therefore,

$$v_o(t) = (16te^{-t} + 8e^{-t})u(t) \text{ V}$$

EXAMPLE 14.4

Consider the network shown in Fig. 14.6a. We wish to determine the output voltage $v_o(t)$.

SOLUTION

As we begin to attack the problem, we note two things. First, because the source $12u(t)$ is connected between $v_1(t)$ and $v_2(t)$, we have a supernode. Second, if $v_2(t)$ is known, $v_o(t)$ can be easily obtained by voltage division. Hence, we will use nodal analysis in conjunction with voltage division to obtain a solution. Then for purposes of comparison, we will find $v_o(t)$ using Thévenin's theorem.

HINT

Summing the currents leaving the supernode.

The transformed network is shown in Fig. 14.6b. KCL for the supernode is

$$\frac{\mathbf{V}_1(s)}{2} + \mathbf{V}_1(s)\frac{s}{2} - 2\mathbf{I}(s) + \frac{\mathbf{V}_2(s)}{s+1} = 0$$

However,

$$\mathbf{I}(s) = -\frac{\mathbf{V}_1(s)}{2}$$

and

$$\mathbf{V}_1(s) = \mathbf{V}_2(s) - \frac{12}{s}$$

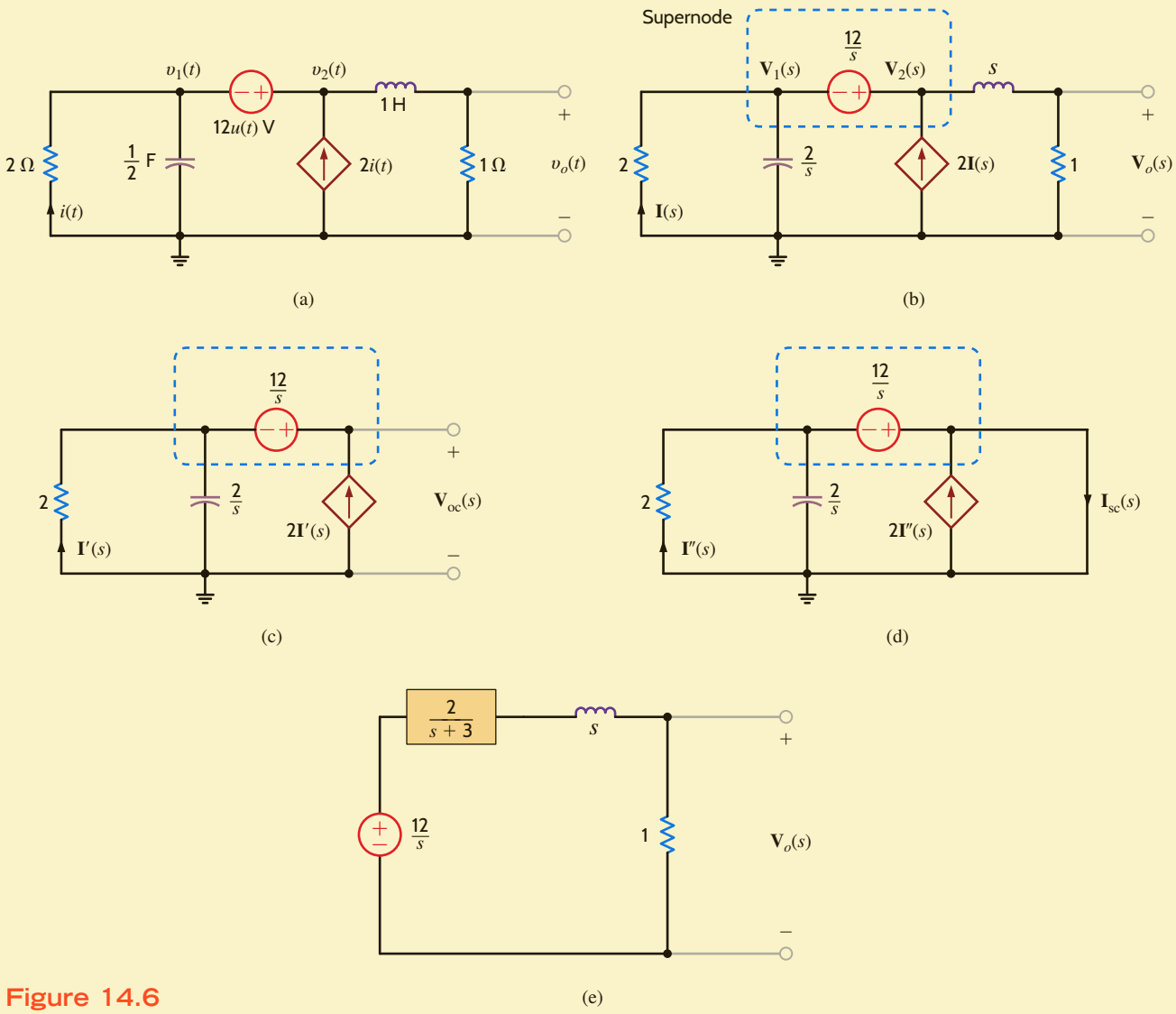

Figure 14.6

Circuits used in Example 14.4.

Substituting the last two equations into the first equation yields

$$\left[\mathbf{V}_2(s) - \frac{12}{s}\right]\frac{s+3}{2} + \frac{\mathbf{V}_2(s)}{s+1} = 0$$

or

$$\mathbf{V}_2(s) = \frac{12(s+1)(s+3)}{s(s^2+4s+5)}$$

Employing a voltage divider, we obtain

$$\begin{aligned}\mathbf{V}_o(s) &= \mathbf{V}_2(s)\frac{1}{s+1}\\ &= \frac{12(s+3)}{s(s^2+4s+5)}\end{aligned}$$

To apply Thévenin's theorem, we break the network to the right of the dependent current source as shown in **Fig. 14.6c**. KCL for the supernode is

$$\frac{\mathbf{V}_{oc}(s) - \frac{12}{s}}{2} + \frac{\mathbf{V}_{oc}(s) - \frac{12}{s}}{\frac{2}{s}} - 2\mathbf{I}'(s) = 0$$

where

$$\mathbf{I}'(s) = -\left(\frac{\mathbf{V}_{oc}(s) - \frac{12}{s}}{2}\right)$$

Solving these equations for $\mathbf{V}_{oc}(s)$ yields

$$\mathbf{V}_{oc}(s) = \frac{12}{s}$$

The short-circuit current is derived from the network in **Fig. 14.6d** as

$$\mathbf{I}_{sc}(s) = 2\mathbf{I}''(s) + \frac{\frac{12}{s}}{\frac{(2)\left(\frac{2}{s}\right)}{2+\frac{2}{s}}}$$

where

$$\mathbf{I}''(s) = \frac{\frac{12}{s}}{2}$$

Solving these equations for $\mathbf{I}_{sc}(s)$ yields

$$\mathbf{I}_{sc}(s) = \frac{6(s+3)}{s}$$

The Thévenin equivalent impedance is then

$$\begin{aligned}\mathbf{Z}_{Th}(s) &= \frac{\mathbf{V}_{oc}(s)}{\mathbf{I}_{sc}(s)}\\ &= \frac{\frac{12}{s}}{\frac{6(s+3)}{s}}\\ &= \frac{2}{s+3}\end{aligned}$$

If we now connect the Thévenin equivalent circuit to the remainder of the original network, we obtain the circuit shown in **Fig. 14.6e**. Using voltage division,

$$\begin{aligned}\mathbf{V}_o(s) &= \frac{1}{\frac{2}{s+3} + s + 1}\left(\frac{12}{s}\right)\\ &= \frac{12(s+3)}{s(s^2+4s+5)}\end{aligned}$$

or

$$\mathbf{V}_o(s) = \frac{12(s+3)}{s(s+2-j1)(s+2+j1)}$$

To obtain the inverse transform, the function is written as

$$\frac{12(s+3)}{s(s+2-j1)(s+2+j1)} = \frac{K_0}{s} + \frac{K_1}{s+2-j1} + \frac{K_1^*}{s+2+j1}$$

Evaluating the constants, we obtain

$$\left.\frac{12(s+3)}{s^2+4s+5}\right|_{s=0} = K_0$$

$$\frac{36}{5} = K_0$$

and

$$\left.\frac{12(s+3)}{s(s+2+j1)}\right|_{s=-2+j1} = K_0$$

$$3.79\underline{/161.57^\circ} = K_1$$

Therefore,

$$v_o(t) = \left[7.2 + 7.58e^{-2t}\cos(t + 161.57^\circ)\right]u(t)\ \text{V}$$

LEARNING ASSESSMENTS

E14.1 Find $i_o(t)$ in the network in Fig. E14.1 using node equations.

ANSWER:
$i_o(t) = 6.53e^{-t/4}\cos\left[\left(\sqrt{15}/4\right)t - 156.72^\circ\right]u(t)$ A.

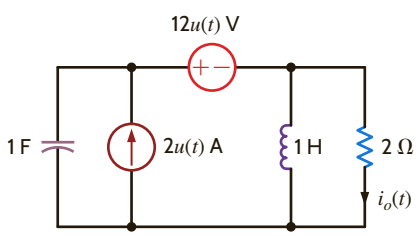

Figure E14.1

E14.2 Find $v_o(t)$ for $t > 0$ in Fig. E14.2 using nodal analysis.

ANSWER:
$v_o(t) = (10.64e^{-0.75t}\cos(0.97t - 19.84^\circ))u(t)$ V.

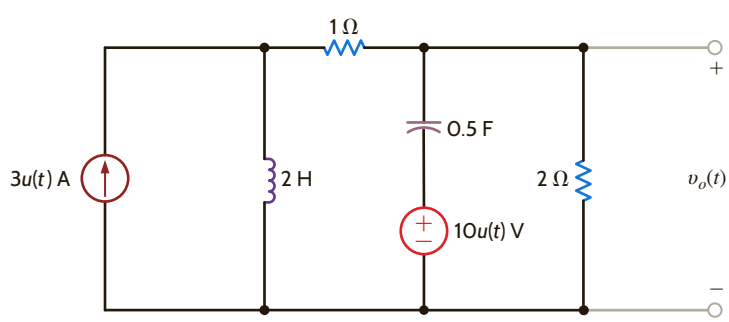

Figure E14.2

E14.3 Find $v_o(t)$ in the network in Fig. E14.3 using loop equations.

ANSWER:
$v_o(t) = (4 - 8.93e^{-3.73t} + 4.93e^{-0.27t})u(t)$ V.

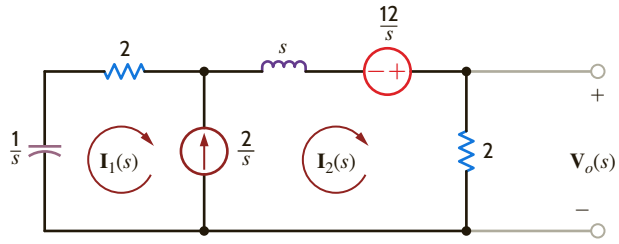

Figure E14.3

E14.4 Find $v_o(t)$ for $t > 0$ in Fig. E14.2 using mesh analysis.

ANSWER:
$v_o(t) = (10.64e^{-0.75t}\cos(0.97t - 19.84°))u(t)$ V.

E14.5 Use Thévenin's theorem to determine $v_o(t)$ for $t > 0$ in Fig. E14.2.

ANSWER:
$v_o(t) = (10.64e^{-0.75t}\cos(0.97t - 19.84°))u(t)$ V.

E14.6 Use Thévenin's theorem to determine $v_o(t)$ for $t > 0$ in Fig. E14.6.

ANSWER:
$v_o(t) = (21.5 + 12.29e^{-1.267t})u(t)$ V.

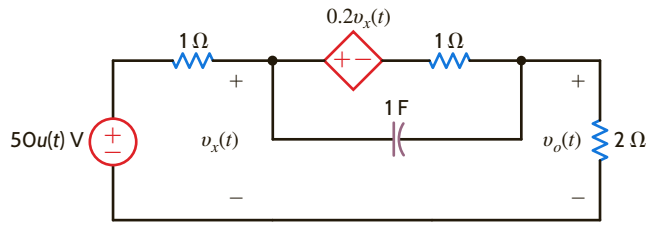

Figure E14.6

We will now illustrate the use of the Laplace transform in the transient analysis of circuits. We will analyze networks such as those considered in Chapter 7. Our approach will first be to determine the initial conditions for the capacitors and inductors in the network, and then we will employ the element models that were specified at the beginning of this chapter together with the circuit analysis techniques to obtain a solution. The following example demonstrates the approach.

EXAMPLE 14.5

Let us determine the output voltage of the network shown in **Fig. 14.7a** for $t > 0$.

SOLUTION

At $t = 0$, the initial voltage across the capacitor is 1 V and the initial current drawn through the inductor is 1 A. The circuit for $t > 0$ is shown in **Fig. 14.7b** with the initial conditions. The transformed network is shown in **Fig. 14.7c**.

The mesh equations for the transformed network are

$$(s + 1)\mathbf{I}_1(s) - s\mathbf{I}_2(s) = \frac{4}{s} + 1$$

$$-s\mathbf{I}_1(s) + \left(s + \frac{2}{s} + 1\right)\mathbf{I}_2(s) = \frac{-1}{s} - 1$$

which can be written in matrix form as

$$\begin{bmatrix} s + 1 & -s \\ -s & \dfrac{s^2 + s + 2}{s} \end{bmatrix} \begin{bmatrix} \mathbf{I}_1(s) \\ \mathbf{I}_2(s) \end{bmatrix} = \begin{bmatrix} \dfrac{s + 4}{s} \\ \dfrac{-(s + 1)}{s} \end{bmatrix}$$

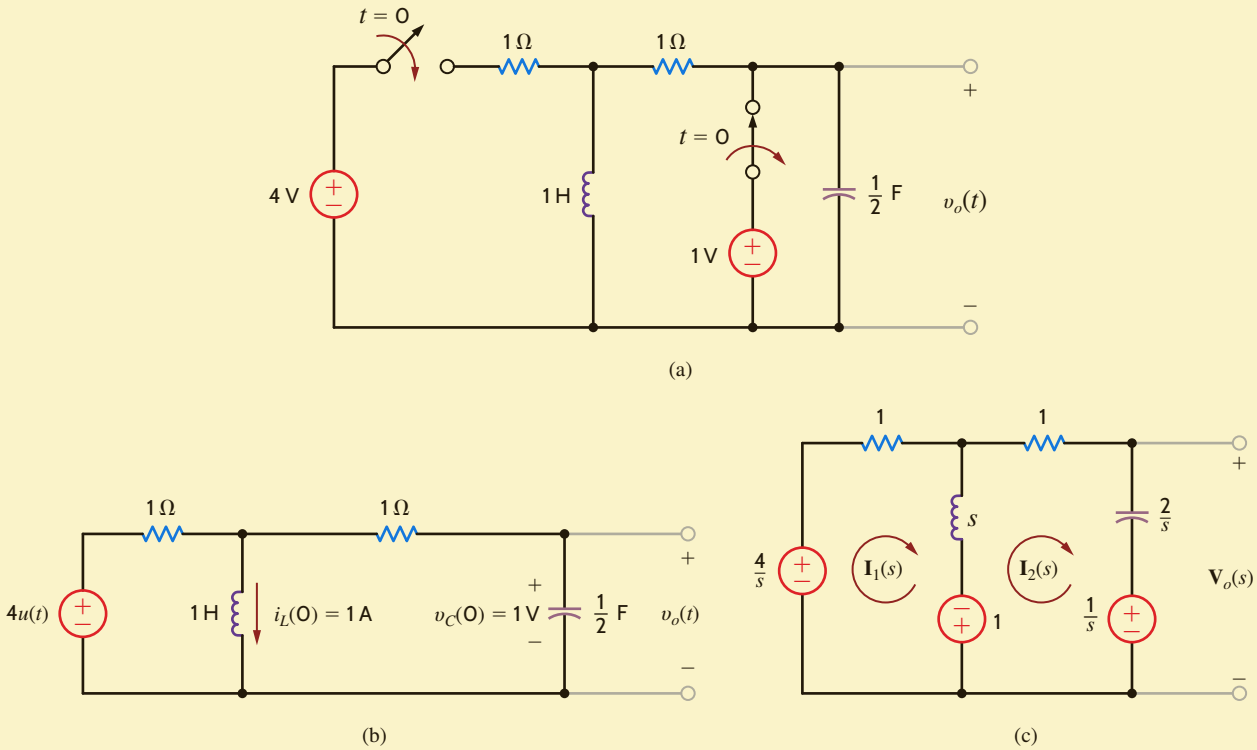

Figure 14.7

Circuits employed in Example 14.5.

Solving for the currents, we obtain

$$\begin{bmatrix} \mathbf{I}_1(s) \\ \mathbf{I}_2(s) \end{bmatrix} = \begin{bmatrix} s+1 & -s \\ -s & \dfrac{s^2+s+2}{s} \end{bmatrix} \begin{bmatrix} \dfrac{s+4}{s} \\ \dfrac{-(s+1)}{s} \end{bmatrix}$$

$$= \frac{s}{2s^2+3s+2} \begin{bmatrix} \dfrac{s^2+s+2}{s} & s \\ s & s+1 \end{bmatrix} \begin{bmatrix} \dfrac{s+4}{s} \\ \dfrac{-(s+1)}{s} \end{bmatrix}$$

$$= \begin{bmatrix} \dfrac{4s^2+6s+8}{s(2s^2+3s+2)} \\ \dfrac{2s-1}{2s^2+3s+2} \end{bmatrix}$$

The output voltage is then

$$\mathbf{V}_o(s) = \frac{2}{s}\mathbf{I}_2(s) + \frac{1}{s}$$

$$= \frac{2}{s}\left(\frac{2s-1}{2s^2+3s+2}\right) + \frac{1}{s}$$

$$= \frac{s+\frac{7}{2}}{s^2+\frac{3}{2}s+1}$$

This function can be written in a partial fraction expansion as

$$\frac{s+\frac{7}{2}}{s^2+\frac{3}{2}s+1} = \frac{K_1}{s+\frac{3}{4}-j\left(\sqrt{7}/4\right)} + \frac{K_1^*}{s+\frac{3}{4}+j\left(\sqrt{7}/4\right)}$$

Evaluating the constants, we obtain

$$\left.\frac{s+\frac{7}{2}}{s+\frac{3}{4}+j(\sqrt{7}/4)}\right|_{s=-(3/4)+j(\sqrt{7}/4)} = K_1$$

$$2.14\underline{/-76.5^\circ} = K_1$$

Therefore,

$$v_o(t) = \left[4.29e^{-(3/4)t}\cos\left(\frac{\sqrt{7}}{4}t - 76.5^\circ\right)\right]u(t)\,\text{V}$$

LEARNING ASSESSMENTS

E14.7 Solve Learning Assessment E7.3 on page 261 using Laplace transforms.

ANSWER:
$i_1(t) = (1e^{-9t})u(t)$ A.

E14.8 Solve Learning Assessment E7.6 on page 268 using Laplace transforms.

ANSWER:
$v_o(t) = \left(6 - \frac{10}{3}e^{-2t}\right)u(t)$ V.

E14.9 Find $i_0(t)$ for $t > 0$ in Fig. E14.9.

ANSWER:
$i_0(t) = (-2e^{-2t} + e^{-4t})u(t)$ A.

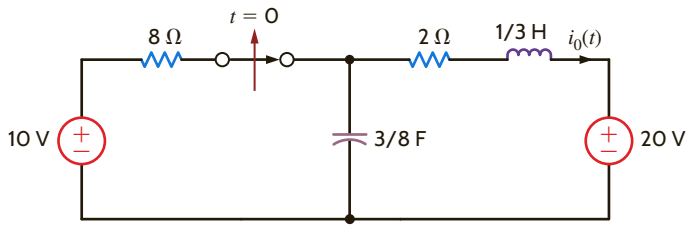

Figure E14.9

E14.10 Find $v_o(t)$ for $t > 0$ in Fig. E14.10.

ANSWER:
$v_o(t) = (-2.93e^{-4.13t} - 9.07e^{-14.54t})u(t)$ V.

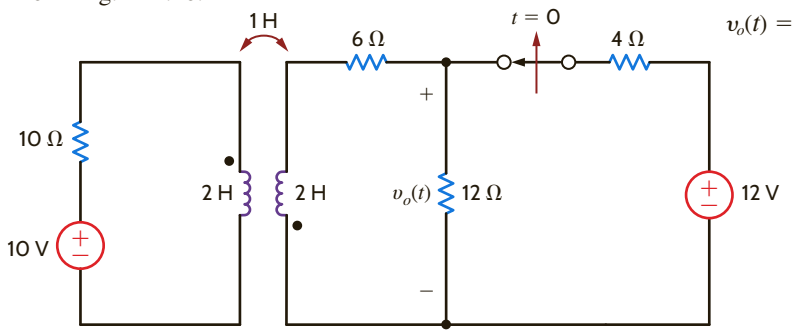

Figure E14.10

E14.11 The input voltage for the circuit in Fig. E14.11 is given in the plot. Determine the output voltage $v_o(t)$.

ANSWER:
$v_o(t) = [(4 - 4e^{-1.5t})u(t) - (4 - 4e^{-1.5(t-1)})u(t-1)]$V.

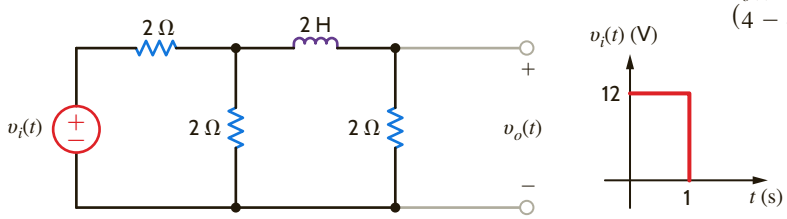

Figure E14.11

14.4 Transfer Function

In Chapter 12 we introduced the concept of network or transfer function. It is essentially nothing more than the ratio of some output variable to some input variable. If both variables are voltages, the transfer function is a voltage gain. If both variables are currents, the transfer function is a current gain. If one variable is a voltage and the other is a current, the transfer function becomes a transfer admittance or impedance.

In deriving a transfer function, all initial conditions are set equal to zero. In addition, if the output is generated by more than one input source in a network, superposition can be employed in conjunction with the transfer function for each source.

To present this concept in a more formal manner, let us assume that the input/output relationship for a linear circuit is

$$b_n \frac{d^n y_o(t)}{dt^n} + b_{n-1} \frac{d^{n-1} y_o(t)}{dt^{n-1}} + \cdots + b_1 \frac{dy_o(t)}{dt} + b_0 y_o(t)$$
$$= a_m \frac{d^m x_i(t)}{dt^m} + a_{m-1} \frac{d^{m-1} x_i(t)}{dt^{m-1}} + \cdots + a_1 \frac{dx_i(t)}{dt} + a_0 x_i(t)$$

If all the initial conditions are zero, the transform of the equation is

$$(b_n s^n + b_{n-1} s^{n-1} + \cdots + b_1 s + b_0)\mathbf{Y}_o(s) = (a_m s^m + a_{m-1} s^{m-1} + \cdots + a_1 s + a_0)\mathbf{X}_i(s)$$

or

$$\frac{\mathbf{Y}_o(s)}{\mathbf{X}_i(s)} = \frac{a_m s^m + a_{m-1} s^{m-1} + \cdots + a_1 s + a_0}{b_n s^n + b_{n-1} s^{n-1} + \cdots + b_1 s + b_0}$$

This ratio of $\mathbf{Y}_o(s)$ to $\mathbf{X}_i(s)$ is called the *transfer* or *network function*, which we denote as $\mathbf{H}(s)$; that is,

$$\frac{\mathbf{Y}_o(s)}{\mathbf{X}_i(s)} = \mathbf{H}(s)$$

or

$$\mathbf{Y}_o(s) = \mathbf{H}(s)\mathbf{X}_i(s) \qquad \textbf{14.16}$$

This equation states that the output response $\mathbf{Y}_o(s)$ is equal to the network function multiplied by the input $\mathbf{X}_i(s)$. Note that if $x_i(t) = \delta(t)$ and therefore $\mathbf{X}_i(s) = 1$, the impulse response is equal to the inverse Laplace transform of the network function. This is an extremely important concept because it illustrates that if we know the impulse response of a network, we can find the response due to some other forcing function using Eq. (14.16).

At this point, it is informative to review briefly the natural response of both first-order and second-order networks. We demonstrated in Chapter 7 that if only a single storage element is present, the natural response of a network to an initial condition is always of the form

$$x(t) = X_0 e^{-t/\tau}$$

where $x(t)$ can be either $v(t)$ or $i(t)$, X_0 is the initial value of $x(t)$, and τ is the time constant of the network. We also found that the natural response of a second-order network is controlled by the roots of the *characteristic equation*, which is of the form

$$s^2 + 2\zeta\omega_0 s + \omega_0^2 = 0$$

where ζ is the *damping ratio* and ω_0 is the *undamped natural frequency*. These two key factors, ζ and ω_0, control the response, and there are basically three cases of interest, illustrated in **Fig. 14.8**.

CASE 1, $\zeta > 1$: OVERDAMPED NETWORK The roots of the characteristic equation are $s_1, s_2 = -\zeta\omega_0 \pm \omega_0\sqrt{\zeta^2 - 1}$ and, therefore, the network response is of the form

$$x(t) = K_1 e^{-\left(\zeta\omega_0 + \omega_0\sqrt{\zeta^2 - 1}\right)t} + K_2 e^{-\left(\zeta\omega_0 - \omega_0\sqrt{\zeta^2 - 1}\right)t}$$

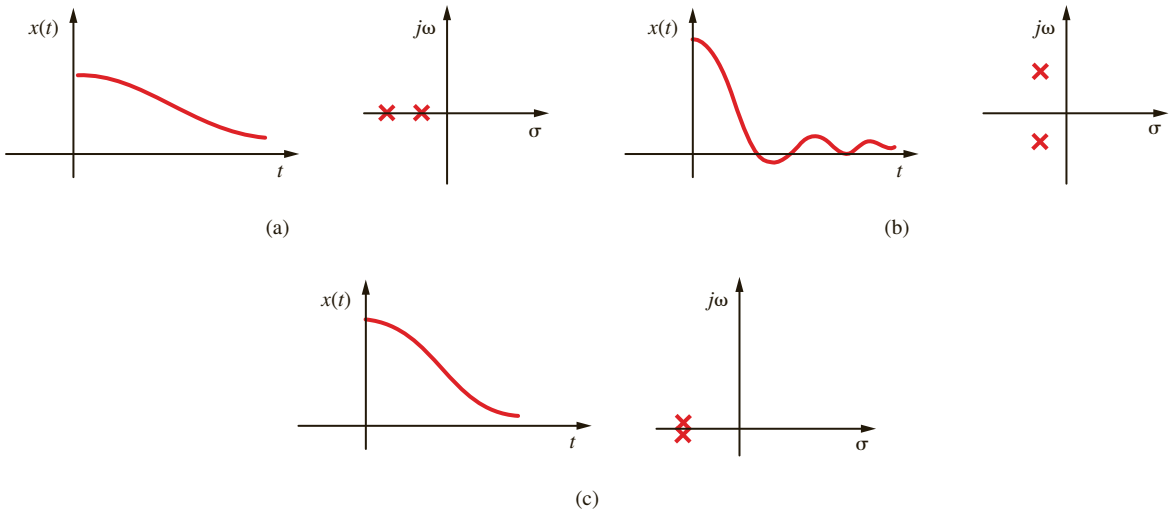

Figure 14.8

Natural response of a second-order network together with network pole locations for the three cases: (a) overdamped, (b) underdamped, and (c) critically damped.

CASE 2, $\zeta < 1$: UNDERDAMPED NETWORK The roots of the characteristic equation are $s_1, s_2 = -\zeta\omega_0 \pm j\omega_0\sqrt{1-\zeta^2}$ and, therefore, the network response is of the form

$$x(t) = Ke^{-\zeta\omega_0 t}\cos\left(\omega_0\sqrt{1-\zeta^2}\,t + \phi\right)$$

CASE 3, $\zeta = 1$: CRITICALLY DAMPED NETWORK The roots of the characteristic equation are $s_1, s_2 = -\omega_0$ and, hence, the response is of the form

$$x(t) = K_1 te^{-\omega_0 t} + K_2 e^{-\omega_0 t}$$

The reader should note that the characteristic equation is the denominator of the transfer function $\mathbf{H}(s)$, and the roots of this equation, which are the poles of the network, determine the form of the network's natural response.

A convenient method for displaying the network's poles and zeros in graphical form is the use of a pole-zero plot. A pole-zero plot of a function can be accomplished using what is commonly called the *complex* or *s-plane*. In the complex plane the abscissa is σ and the ordinate is $j\omega$. Zeros are represented by 0's, and poles are represented by $\times$'s. Although we are concerned only with the finite poles and zeros specified by the network or response function, we should point out that a rational function must have the same number of poles and zeros. Therefore, if $n > m$, there are $n - m$ zeros at the point at infinity, and if $n < m$, there are $m - n$ poles at the point at infinity. A systems engineer can tell a lot about the operation of a network or system by simply examining its pole-zero plot.

Note in Fig. 14.8 that if the network poles are real and unequal, the response is slow and, therefore, $x(t)$ takes a long time to reach zero. If the network poles are complex conjugates, the response is fast; however, it overshoots and is eventually damped out. The dividing line between the overdamped and underdamped cases is the critically damped case in which the roots are real and equal. In this case, the transient response dies out as quickly as possible, with no overshoot.

EXAMPLE 14.6

If the impulse response of a network is $h(t) = e^{-t}$, let us determine the response $v_o(t)$ to an input $v_i(t) = 10e^{-2t}u(t)$ V.

SOLUTION

The transformed variables are

$$\mathbf{H}(s) = \frac{1}{s+1}$$

$$\mathbf{V}_i(s) = \frac{10}{s+2}$$

Therefore,

$$\mathbf{V}_o(s) = \mathbf{H}(s)\mathbf{V}_i(s) = \frac{10}{(s+1)(s+2)}$$

and hence,

$$v_o(t) = 10(e^{-t} - e^{-2t})u(t) \text{ V}$$

The transfer function is important because it provides the systems engineer with a great deal of knowledge about the system's operation, since its dynamic properties are governed by the system poles.

EXAMPLE 14.7

Let us derive the transfer function $\mathbf{V}_o(s)/\mathbf{V}_i(s)$ for the network in Fig. 14.9a.

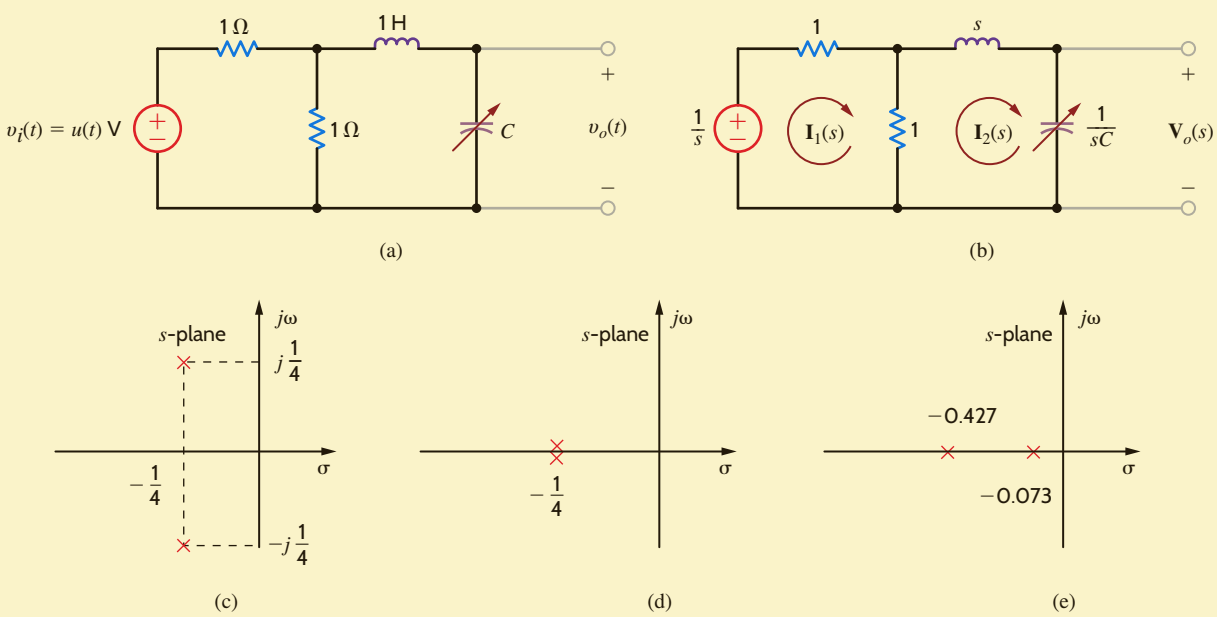

Figure 14.9

Networks and pole-zero plots used in Example 14.7.

Our output variable is the voltage across a variable capacitor, and the input voltage is a unit step. The transformed network is shown in Fig. 14.9b. The mesh equations for the network are

$$2\mathbf{I}_1(s) - \mathbf{I}_2(s) = \mathbf{V}_i(s)$$
$$-\mathbf{I}_1(s) + \left(s + \frac{1}{sC} + 1\right)\mathbf{I}_2(s) = 0$$

and the output equation is

$$\mathbf{V}_o(s) = \frac{1}{sC}\mathbf{I}_2(s)$$

From these equations we find that the transfer function is

$$\frac{\mathbf{V}_o(s)}{\mathbf{V}_i(s)} = \frac{1/2C}{s^2 + \frac{1}{2}s + 1/C}$$

Since the transfer function is dependent on the value of the capacitor, let us examine the transfer function and the output response for three values of the capacitor.

a. $C = 8$ F

$$\frac{\mathbf{V}_o(s)}{\mathbf{V}_i(s)} = \frac{\frac{1}{16}}{\left(s^2 + \frac{1}{2}s + \frac{1}{8}\right)} = \frac{\frac{1}{16}}{\left(s + \frac{1}{4} - j\frac{1}{4}\right)\left(s + \frac{1}{4} + j\frac{1}{4}\right)}$$

The output response is

$$\mathbf{V}_o(s) = \frac{\frac{1}{16}}{s\left(s + \frac{1}{4} - j\frac{1}{4}\right)\left(s + \frac{1}{4} + j\frac{1}{4}\right)}$$

As illustrated in Chapter 7, the poles of the transfer function, which are the roots of the characteristic equation, are complex conjugates, as shown in Fig. 14.9c; therefore, the output response will be *underdamped*. The output response as a function of time is

$$v_o(t) = \left[\frac{1}{2} + \frac{1}{\sqrt{2}}e^{-t/4}\cos\left(\frac{t}{4} + 135°\right)\right]u(t)\text{ V}$$

Note that for large values of time the transient oscillations, represented by the second term in the response, become negligible and the output settles out to a value of 1/2 V. This can also be seen directly from the circuit since for large values of time the input looks like a dc source, the inductor acts like a short circuit, the capacitor acts like an open circuit, and the resistors form a voltage divider.

b. $C = 16$ F

$$\frac{\mathbf{V}_o(s)}{\mathbf{V}_i(s)} = \frac{\frac{1}{32}}{s^2 + \frac{1}{2}s + \frac{1}{16}} = \frac{\frac{1}{32}}{\left(s + \frac{1}{4}\right)^2}$$

The output response is

$$\mathbf{V}_o(s) = \frac{\frac{1}{32}}{s\left(s + \frac{1}{4}\right)^2}$$

Since the poles of the transfer function are real and equal as shown in Fig. 14.9d, the output response will be *critically damped*. $v_o(t) = \mathcal{L}^{-1}[\mathbf{V}_o(s)]$ is

$$v_o(t) = \left[\frac{1}{2} - \left(\frac{t}{8} + \frac{1}{2}\right)e^{-t/4}\right]u(t)\text{ V}$$

c. $C = 32$ F

$$\frac{\mathbf{V}_o(s)}{\mathbf{V}_i(s)} = \frac{\frac{1}{64}}{s^2 + \frac{1}{2}s + \frac{1}{32}} = \frac{\frac{1}{64}}{(s + 0.427)(s + 0.073)}$$

The output response is

$$\mathbf{V}_o(s) = \frac{\frac{1}{64}}{s(s + 0.427)(s + 0.073)}$$

The poles of the transfer function are real and unequal, as shown in **Fig. 14.9e** and, therefore, the output response will be *overdamped*. The response as a function of time is

$$v_o(t) = (0.5 + 0.103e^{-0.427t} - 0.603e^{-0.073t})u(t) \text{ V}$$

Although the values selected for the network parameters are not very practical, remember that both magnitude and frequency scaling, as outlined in Chapter 12, can be applied here also.

LEARNING ASSESSMENTS

E14.12 If the unit impulse response of a network is known to be $10/9(e^{-t} - e^{-10t})$, determine the unit step response.

ANSWER:

$x(t) = \left(1 - \frac{10}{9}e^{-t} + \frac{1}{9}e^{-10t}\right)u(t).$

E14.13 The transfer function for a network is

$$\mathbf{H}(s) = \frac{s + 10}{s^2 + 4s + 8}$$

Determine the pole-zero plot of $\mathbf{H}(s)$, the type of damping exhibited by the network, and the unit step response of the network.

ANSWER:

The network is underdamped;

$x(t) = \left[\frac{10}{8} + 1.46e^{-2t}\cos(2t - 210.96°)\right]u(t).$

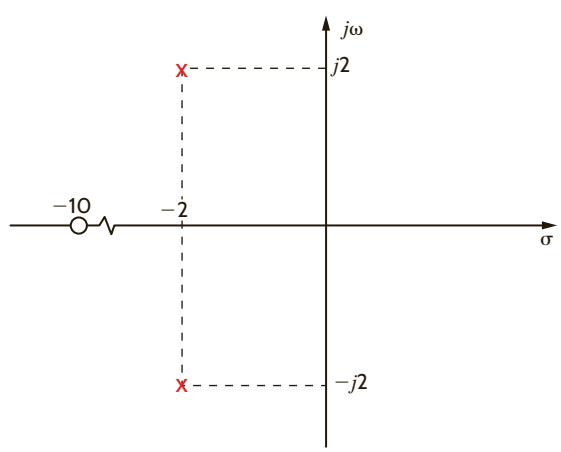

Figure E14.13

EXAMPLE 14.8

The circuit in Fig. 14.10 is an existing low-pass filter. On installation, we find that its output exhibits too much oscillation when responding to pulses. We wish to alter the filter in order to make it critically damped.

SOLUTION

First, we must determine the existing transfer function, $\mathbf{H}(s)$:

$$\mathbf{H}(s) = \frac{\mathbf{V}_O}{\mathbf{V}_S} = \frac{\dfrac{R}{1 + sRC}}{\dfrac{R}{1 + sRC} + sL} = \frac{\dfrac{1}{LC}}{s^2 + \dfrac{s}{RC} + \dfrac{1}{LC}} \qquad \textbf{14.17}$$

where the term $\dfrac{R}{1 + sRC}$ is just the parallel combination of the resistor and capacitor. Given our component values, the transfer function is

$$\mathbf{H}(s) = \frac{10^{10}}{s^2 + (5 \times 10^4)s + 10^{10}} \qquad \textbf{14.18}$$

and the resonant frequency and damping ratio are

$$\omega_0 = \frac{1}{\sqrt{LC}} = 10^5 \text{ rad/s} \quad \text{and} \quad 2\zeta\omega_0 = \frac{1}{RC} \Rightarrow \zeta = \frac{5 \times 10^4}{2\omega_0} = \frac{5 \times 10^4}{2 \times 10^5} = 0.25 \qquad \textbf{14.19}$$

The network is indeed underdamped. From Eq. (14.19), we find that raising the damping ratio by a factor of 4 to 1.0 requires that R be lowered by the same factor of 4 to 5 Ω. This can be done by adding a resistor, R_X, in parallel with R as shown in Fig. 14.11. The required resistor value can be obtained by solving Eq. (14.20) for R_X:

$$R_{eq} = 5 = \frac{RR_X}{R + R_X} = \frac{20R_X}{20 + R_X} \qquad \textbf{14.20}$$

The solution is $R_X = 6.67\ \Omega$.

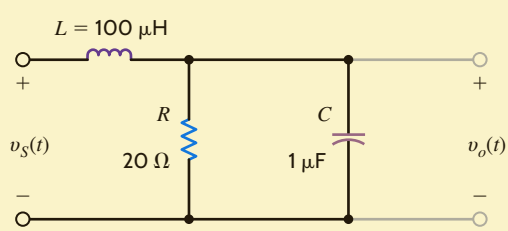

Figure 14.10
A second-order low-pass filter.

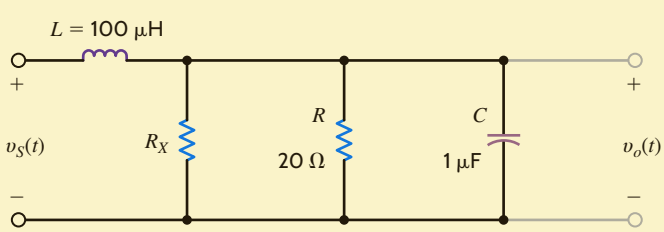

Figure 14.11
The addition of a resistor to change the damping ratio of the network.

EXAMPLE 14.9

The Recording Industry Association of America (RIAA) uses standardized recording and playback filters to improve the quality of phonographic disk recordings. This process is demonstrated in **Fig. 14.12**. During a recording session, the voice or music signal is passed through the recording filter, which de-emphasizes the bass content. This filtered signal is then recorded into the vinyl. On playback, the phonograph needle assembly senses the recorded message and reproduces the filtered signal, which proceeds to the playback filter. The purpose of the playback filter is to emphasize the bass content and reconstruct the original voice/music signal. Next, the reconstructed signal can be amplified and sent on to the speakers.

Let us examine the pole-zero diagrams for the record and playback filters.

SOLUTION

The transfer function for the recording filter is

$$\mathbf{G}_{vR}(s) = \frac{K(1 + s\tau_{z1})(1 + s\tau_{z2})}{1 + s\tau_p}$$

where the time constants are $\tau_{z1} = 75\ \mu\text{s}$, $\tau_{z2} = 3180\ \mu\text{s}$, and $\tau_p = 318\ \mu\text{s}$; K is a constant chosen such that $\mathbf{G}_{vR}(s)$ has a magnitude of 1 at 1000 Hz. The resulting pole and zero frequencies in radians/second are

$$\omega_{z1} = 1/\tau_{z1} = 13.33 \text{ krad/s}$$
$$\omega_{z2} = 1/\tau_{z2} = 313.46 \text{ rad/s}$$
$$\omega_p = 1/\tau_p = 3.14 \text{ krad/s}$$

Fig. 14.13a shows the pole-zero diagram for the recording filter.

The playback filter transfer function is the reciprocal of the record transfer function.

$$\mathbf{G}_{vp}(s) = \frac{1}{\mathbf{G}_{vR}(s)} = \frac{A_o(1 + s\tau_z)}{(1 + s\tau_{p1})(1 + s\tau_{p2})}$$

where the time constants are now $\tau_{p1} = 75\ \mu\text{s}$, $\tau_{p2} = 3180\ \mu\text{s}$, $\tau_z = 318\ \mu\text{s}$, and A_o is $1/K$. Pole and zero frequencies, in radians/second, are

$$\omega_{p1} = 1/\tau_{z1} = 13.33 \text{ krad/s}$$
$$\omega_{p2} = 1/\tau_{z2} = 313.46 \text{ rad/s}$$
$$\omega_z = 1/\tau_p = 3.14 \text{ krad/s}$$

which yields the pole-zero diagram in **Fig. 14.13b**. The voice/music signal eventually passes through both filters before proceeding to the amplifier. In the s-domain, this is equivalent to multiplying $\mathbf{V}_s(s)$ by both $\mathbf{G}_{vR}(s)$ and $\mathbf{G}_{vp}(s)$. In the pole-zero diagram, we simply superimpose the pole-zero diagrams of the two filters, as shown in **Fig. 14.13c**. Note that at each pole frequency there is a zero and vice versa. The pole-zero pairs cancel one another, yielding a pole-zero diagram that contains no poles and no zeros. This effect can be seen mathematically by multiplying the two transfer functions, $\mathbf{G}_{vR}(s)\mathbf{G}_{vp}(s)$, which yields a product independent of s. Thus, the original voice/music signal is reconstructed and fidelity is preserved.

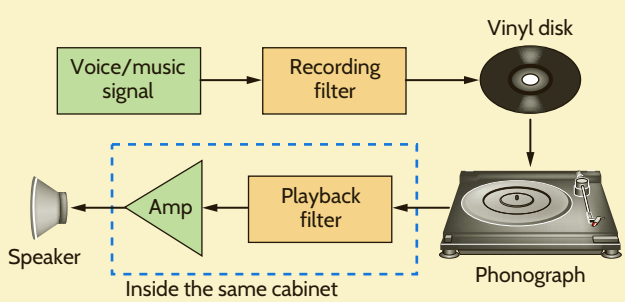

Figure 14.12
Block diagram for phonograph disk recording and playback.

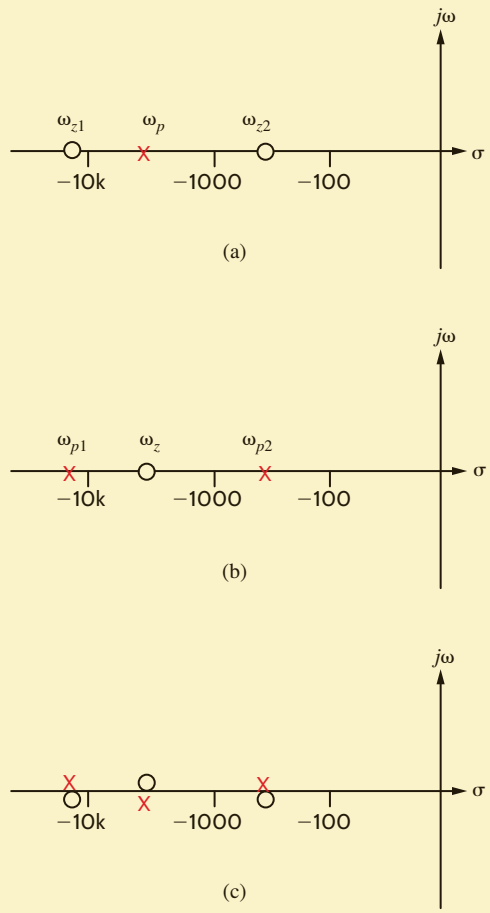

Figure 14.13
Pole-zero diagrams for RIAA phonographic filters.

EXAMPLE 14.10

In a large computer network, two computers are transferring digital data on a single wire at a rate of 1000 bits/s. The voltage waveform, v_{data}, in Fig. 14.14 shows a possible sequence of bits alternating between "high" and "low" values. Also present in the environment is a source of 100 kHz (628 krad/s) noise, which is corrupting the data.

It is necessary to filter out the high-frequency noise without destroying the data waveform. Let us place the second-order low-pass active filter of Fig. 14.15 in the data path so that the data and noise signals will pass through it.

SOLUTION

The filter's transfer function is found to be

$$\mathbf{G}_v(s) = \frac{\mathbf{V}_o(s)}{\mathbf{V}_{\text{data}}(s)} = \frac{-\left(\frac{R_3}{R_1}\right)\left(\frac{1}{R_2R_3C_1C_2}\right)}{s^2 + s\left(\frac{1}{R_1C_1} + \frac{1}{R_2C_1} + \frac{1}{R_3C_1}\right) + \frac{1}{R_2R_3C_1C_2}}$$

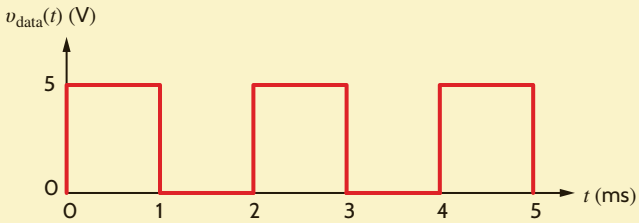

Figure 14.14
1000 bits/s digital data waveform.

Figure 14.15

Second-order low-pass filter.

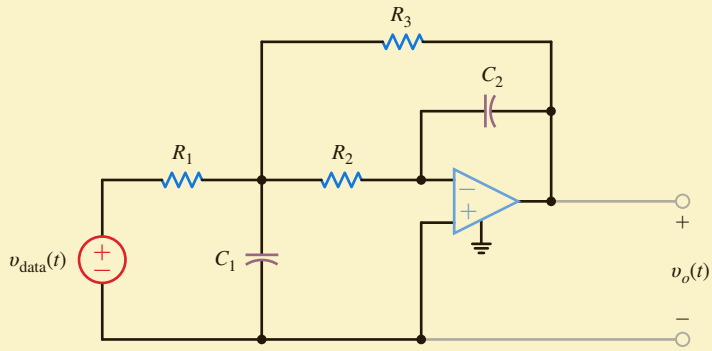

To simplify our work, let $R_1 = R_2 = R_3 = R$. From our work in Chapter 12, we know that the characteristic equation of a second-order system can be expressed as

$$s^2 + 2s\zeta\omega_0 + \omega_0^2 = 0$$

Comparing the two preceding equations, we find that

$$\omega_0 = \frac{1}{R\sqrt{C_1C_2}}$$

$$2\zeta\omega_0 = \frac{3}{RC_1}$$

and therefore,

$$\zeta = \frac{3}{2}\sqrt{\frac{C_2}{C_1}}$$

The poles of the filter are at

$$s_1, s_2 = -\zeta\omega_0 \pm \omega_0\sqrt{\zeta^2 - 1}$$

To eliminate the 100-kHz noise, at least one pole should be well below 100 kHz, as shown in the Bode plot sketched in **Fig. 14.16**. By placing a pole well below 100 kHz, the gain of the filter will be quite small at 100 kHz, effectively filtering the noise.

If we arbitrarily choose an overdamped system with $\omega_0 = 25$ krad/s and $\zeta = 2$, the resulting filter is overdamped with poles at $s_1 = -6.7$ krad/s and $s_2 = -93.3$ krad/s. The pole-zero diagram for the filter is shown in **Fig. 14.17**.

If we let $R = 40$ kΩ, then we may write

$$\omega_0 = 25{,}000 = \frac{1}{40{,}000\sqrt{C_1C_2}}$$

or

$$C_1C_2 = 10^{-18}$$

Also,

$$\zeta = 2 = \frac{3}{2}\sqrt{\frac{C_2}{C_1}}$$

Figure 14.16

Bode plot sketch for a second-order low-pass filter.

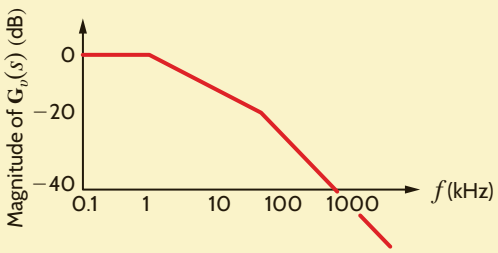

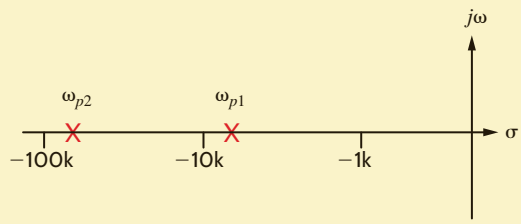

Figure 14.17
Pole-zero diagram for low-pass filter.

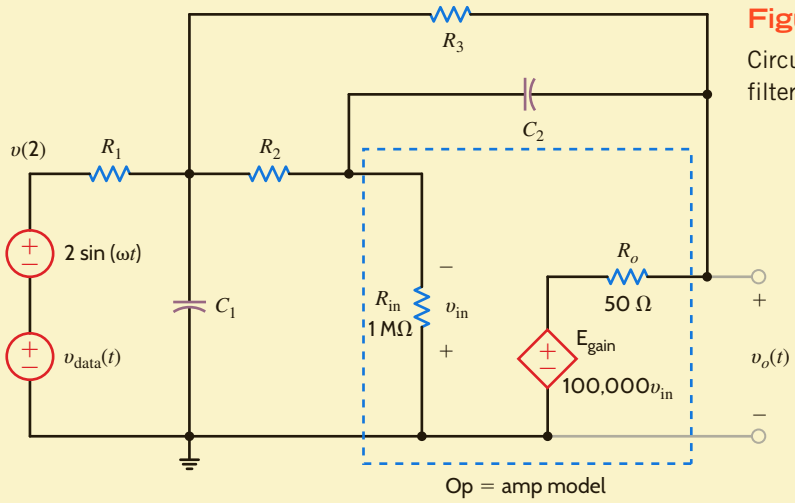

Figure 14.18
Circuit for second-order filter.

which can be expressed as

$$\frac{C_2}{C_1} = \frac{16}{9}$$

Solving for C_1 and C_2 yields

$$C_1 = 0.75 \text{ nF}$$
$$C_2 = 1.33 \text{ nF}$$

The circuit used to simulate the filter is shown in **Fig. 14.18**. The sinusoidal source has a frequency of 100 kHz and is used to represent the noise source.

Plots for the input to the filter and the output voltage for 2 ms are shown in **Fig. 14.19**. Note that output indeed contains much less of the 100-kHz noise. Also, the fast rise and fall times of the data signal are slower in the output voltage. Despite this slower response, the output voltage is fast enough to keep pace with the 1000-bits/s transfer rate.

Let us now increase the data transfer rate from 1000 to 25,000 bits/s, as shown in **Fig. 14.20**. The total input and output signals are plotted in **Fig. 14.21** for 200 μs. Now the output cannot keep pace with the input, and the data information is lost. Let us investigate why this occurs. We know that the filter is second order with poles at s_1 and s_2. If we represent the data input as a 5-V step function, the output voltage is

$$\mathbf{V}_o(s) = \mathbf{G}_v(s)\left(\frac{5}{s}\right) = \frac{K}{(s+s_1)(s+s_2)}\left(\frac{5}{s}\right)$$

where K is a constant. Since the filter is overdamped, s_1 and s_2 are real and positive. A partial fraction expansion of $\mathbf{V}_o(s)$ is of the form

$$\mathbf{V}_o(s) = \frac{K_1}{s} + \frac{K_2}{(s+s_1)} + \frac{K_3}{(s+s_2)}$$

yielding the time-domain expression

$$v_o(t) = [K_1 + K_2e^{-s_1t} + K_3e^{-s_2t}]u(t) \text{ V}$$

Figure 14.19

Simulation output for node 2 and $v_o(t)$.

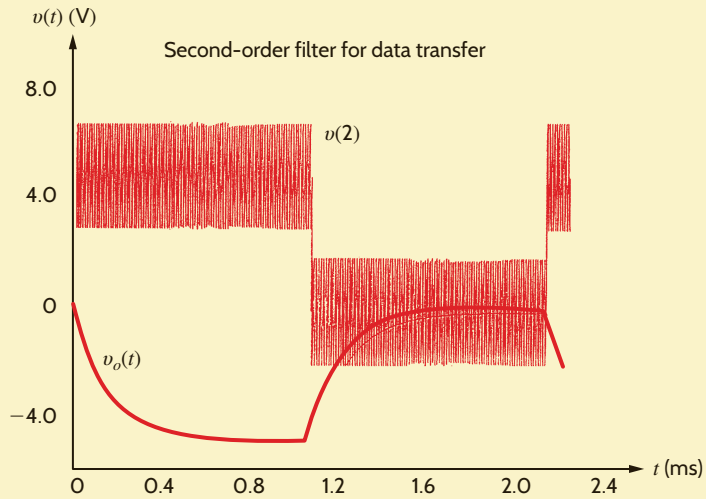

Figure 14.20

25,000-bits/s digital data waveform.

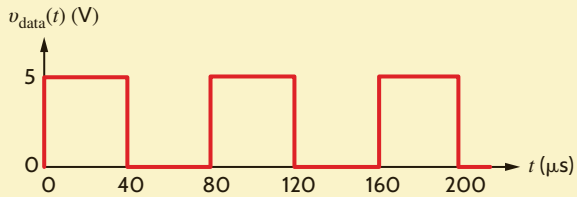

Figure 14.21

Simulation output for node 2 and $v_o(t)$ with 25,000-bits/s data transfer rate.

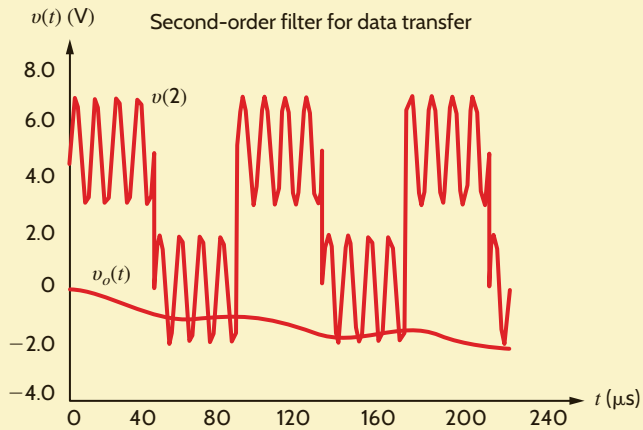

where K_1, K_2, and K_3 are real constants. The exponential time constants are the reciprocals of the pole frequencies.

$$\tau_1 = \frac{1}{s_1} = \frac{1}{6.7\text{k}} = 149\ \mu\text{s}$$

$$\tau_2 = \frac{1}{s_2} = \frac{1}{93.3\text{k}} = 10.7\ \mu\text{s}$$

Since exponentials reach steady state in roughly 5τ, the exponential associated with τ_2 affects the output for about 50 μs and the τ_1 exponential will reach steady state after about 750 μs. From Fig. 14.20 we see that at a 25,000-bits/s data transfer rate, each bit (a "high" or "low" voltage value) occupies a 40-μs time span. Therefore, the exponential associated with s_1, and thus $v_o(t)$, is still far from its steady-state condition when the next bit is transmitted. In short, s_1 is too small.

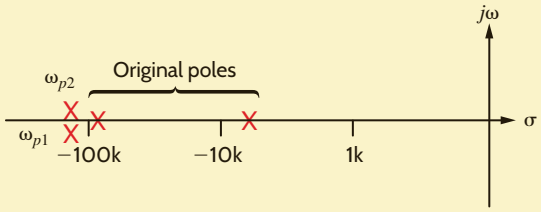

Figure 14.22
Pole-zero diagram for both original and critically damped systems.

Let us remedy this situation by increasing the pole frequencies and changing to a critically damped system, $\zeta = 1$. If we select $\omega_0 = 125$ krad/s, the poles will be at $s_1 = s_2 = -125$ krad/s or 19.9 kHz—both below the 100-kHz noise we wish to filter out. **Fig. 14.22** shows the new pole positions moved to the left of their earlier positions, which we expect will result in a quicker response to the v_{data} pulse train.

Now the expressions for ω_0 and ζ are

$$\omega_0 = 125{,}000 = \frac{1}{40{,}000\sqrt{C_1C_2}}$$

or

$$C_1C_2 = 4 \times 10^{-20}$$

Also,

$$\zeta = 1 = \frac{3}{2}\sqrt{\frac{C_2}{C_1}}$$

which can be expressed as

$$\frac{C_2}{C_1} = \frac{4}{9}$$

Solving for C_1 and C_2 yields

$$C_1 = 300 \text{ pF}$$
$$C_2 = 133.3 \text{ pF}$$

A simulation using these new capacitor values produces the input–output data shown in **Fig. 14.23**. Now the output voltage just reaches the "high" and "low" levels just before v_{data} makes its next transition and the 100-kHz noise is still much reduced.

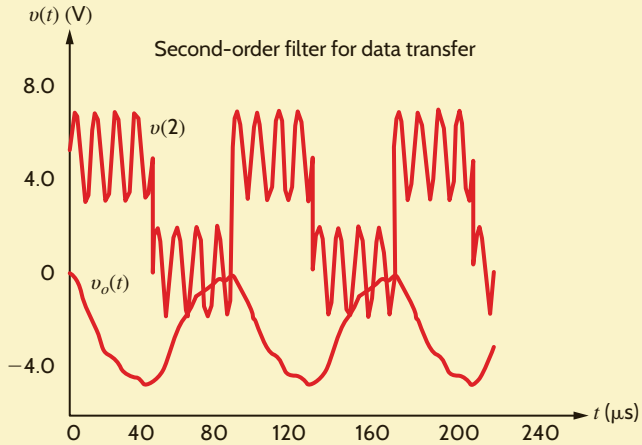

Figure 14.23
Simulation outputs for node 2 and $v_o(t)$ for the critically damped system.

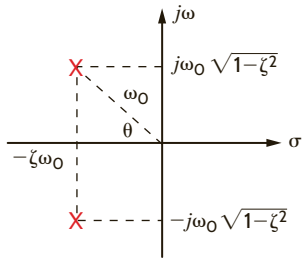

Figure 14.24
Pole locations for a second-order underdamped network.

Recall from our previous discussion that if a second-order network is underdamped, the characteristic equation of the network is of the form

$$s^2 + 2\zeta\omega_0 s + \omega_0^2 = 0$$

and the roots of this equation, which are the network poles, are of the form

$$s_1, s_2 = -\zeta\omega_0 \pm j\omega_0\sqrt{1 - \zeta^2}$$

The roots s_1 and s_2, when plotted in the s-plane, generally appear as shown in **Fig. 14.24**, where

$$\zeta = \text{damping ratio}$$
$$\omega_0 = \text{undamped natural frequency}$$

and as shown in Fig. 14.24,

$$\zeta = \cos\theta$$

The damping ratio and the undamped natural frequency are exactly the same quantities as those employed in Chapter 12 when determining a network's frequency response. We find that these same quantities govern the network's transient response.

EXAMPLE 14.11

Let us examine the effect of pole position in the s-plane on the transient response of the second-order RLC series network shown in **Fig. 14.25**.

SOLUTION

The voltage gain transfer function is

$$\mathbf{G}_v(s) = \frac{\dfrac{1}{LC}}{s^2 + s\left(\dfrac{R}{L}\right) + \dfrac{1}{LC}} = \frac{\omega_0^2}{s^2 + 2\zeta\omega_0 s + \omega_0^2}$$

For this analysis we will let $\omega_0 = 2000$ rad/s for $\zeta = 0.25$, 0.50, 0.75, and 1.0. From the preceding equation we see that

$$LC = \frac{1}{\omega_0^2} = 2.5 \times 10^{-7}$$

and

$$R = 2\zeta\sqrt{\frac{L}{C}}$$

If we arbitrarily let $L = 10$ mH, then $C = 25$ μF. Also, for $\zeta = 0.25$, 0.50, 0.75, and 1.0, $R = 10\ \Omega$, $20\ \Omega$, $30\ \Omega$, and $40\ \Omega$, respectively. Over the range of ζ values, the network ranges from underdamped to critically damped. Since poles are complex for underdamped systems, the real and imaginary components and the magnitude of the poles of $\mathbf{G}_v(s)$ are given in Table 14.1 for the ζ values listed previously.

Fig. 14.26 shows the pole-zero diagrams for each value of ζ. Note first that all the poles lie on a circle; thus, the pole magnitudes are constant, consistent with Table 14.1. Second, as

Figure 14.25
RLC series network.

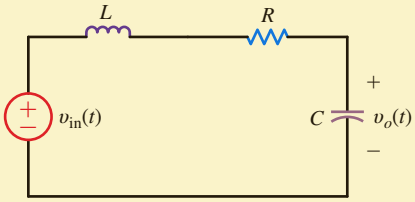

TABLE 14.1 Pole locations for $\zeta = 0.25$ to 1.0

DAMPING RATIO	REAL	IMAGINARY	MAGNITUDE
1.00	2000.0	0.0	2000.0
0.75	1500.0	1322.9	2000.0
0.50	1000.0	1732.1	2000.0
0.25	500.0	1936.5	2000.0

ζ decreases, the real part of the pole decreases while the imaginary part increases. In fact, when ζ goes to zero, the poles become imaginary.

A simulation of a unit step transient excitation for all four values of R is shown in Fig. 14.27. We see that as ζ decreases, the overshoot in the output voltage increases. Furthermore, when the network is critically damped ($\zeta = 1$), there is no overshoot at all. In most applications, excessive overshoot is not desired. To correct this, the damping ratio, ζ, should be increased, which for this circuit would require an increase in the resistor value.

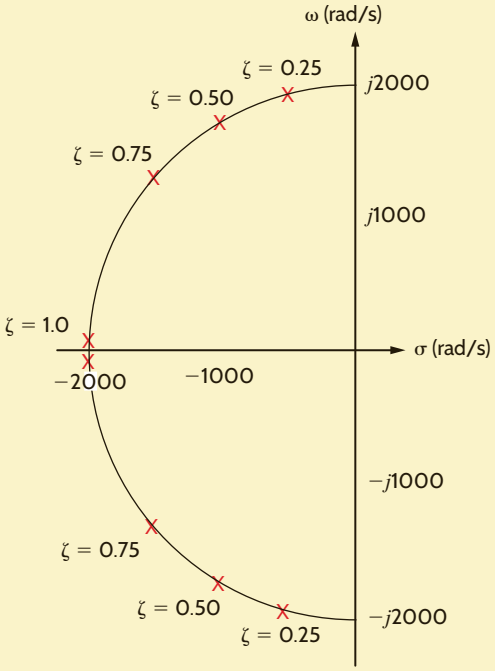

Figure 14.26
Pole-zero diagrams for $\zeta = 0.25$ to 1.0.

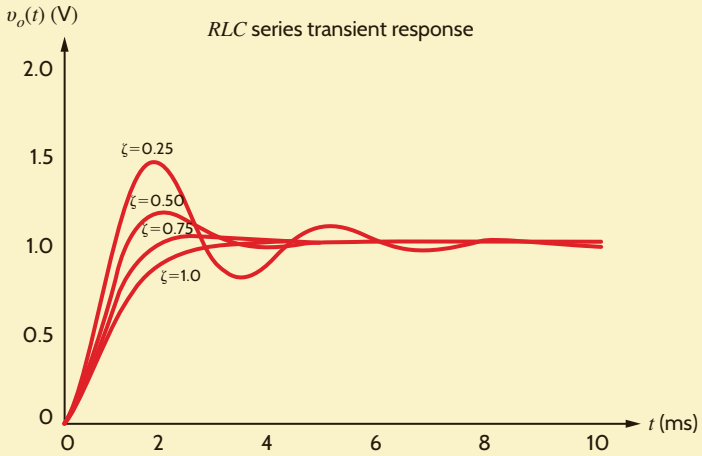

Figure 14.27
Transient response output for $\zeta = 0.25$ to 1.0.

EXAMPLE 14.12

Let us revisit the Tacoma Narrows Bridge disaster examined in Example 12.12. A photograph of the bridge as it collapsed is shown in Fig. 14.28.

In Chapter 12 we assumed that the bridge's demise was brought on by winds oscillating back and forth at a frequency near that of the bridge (0.2 Hz). We found that we could create an *RLC* circuit, shown in Fig. 12.30, that resonates at 0.2 Hz and has an output voltage consistent with the vertical deflection of the bridge. This kind of forced resonance never happened at Tacoma Narrows. The real culprit was not so much wind fluctuations but the bridge itself. This is thoroughly explained in the paper "Resonance, Tacoma Narrows Bridge

Figure 14.28
Tacoma Narrows Bridge as it collapsed on November 7, 1940 (AP Photo/nap).

Failure, and Undergraduate Physics Textbooks," by K. Y. Billah and R. H. Scalan published in the *American Journal of Physics*, vol. 59, no. 2 (1991), pp. 118–124, in which the authors determined that changes in wind speed affected the coefficients of the second-order differential equation that models the resonant behavior. In particular, the damping ratio, ζ, was dependent on the wind speed and is roughly given as

$$\zeta = 0.00460 - 0.00013U \qquad \textbf{14.21}$$

where U is the wind speed in mph. Note, as shown in **Fig. 14.29**, that ζ becomes negative at wind speeds in excess of 35 mph—a point we will demonstrate later. Furthermore, Billah and Scalan report that the bridge resonated in a twisting mode, which can be easily seen in Fig. 12.29 and is described by the differential equation

$$\frac{d^2\theta(t)}{dt^2} + 2\zeta\omega_0\frac{d\theta(t)}{dt} + \omega_0^2\theta(t) = 0$$

or

$$\ddot{\theta} + 2\zeta\omega_0\dot{\theta} + \omega_0^2\theta = 0 \qquad \textbf{14.22}$$

where $\theta(t)$ is the angle of twist in degrees and wind speed is implicit in ζ through Eq. (14.21). Billah and Scalan list the following data obtained either by direct observation at the bridge

Figure 14.29
Damping ratio versus wind speed for the second-order twisting model of the Tacoma Narrows Bridge.

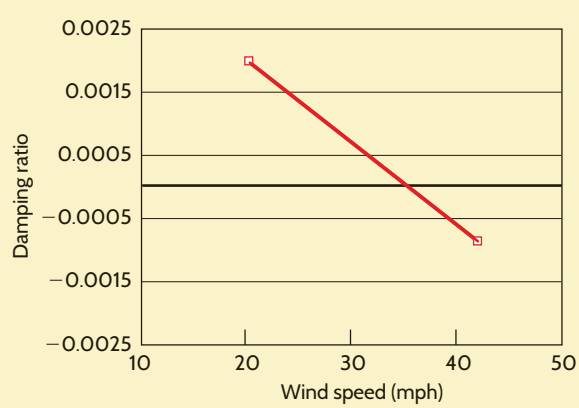

site or through scale model experiments afterward:

$$\text{Wind speed at failure} \approx 42 \text{ mph}$$
$$\text{Twist at failure} \approx \pm 12^\circ$$
$$\text{Time to failure} \approx 45 \text{ minutes}$$

We will start the twisting oscillations using an initial condition on $\theta(0)$ and see whether the bridge oscillations decrease or increase over time. Let us now design a network that will simulate the true Tacoma Narrows disaster.

SOLUTION

First, we solve for $\ddot{\theta}(t)$ in Eq. (14.22):

$$\ddot{\theta} = -2\zeta\omega_0\dot{\theta} - \omega_0^2\theta$$

$$\ddot{\theta} = -2(2\pi)(0.2)(0.0046 - 0.00013U)\dot{\theta} - [2(2\pi)(0.2)]^2\theta \qquad \textbf{14.23}$$

or

$$\ddot{\theta} = -(0.01156 - 0.00033U)\dot{\theta} - 1.579\theta$$

We now wish to model this equation to produce a voltage proportional to $\ddot{\theta}(t)$. We can accomplish this using the op-amp integrator circuit shown in **Fig. 14.30**.

The circuit's operation can perhaps be best understood by first assigning the voltage v_α to be proportional to $\ddot{\theta}(t)$, where 1 V represents 1 deg/s^2. Thus, the output of the first integrator, v_ω, must be

$$v_\omega = -\frac{1}{R_\omega C_\omega}\int v_\alpha \, dt$$

or, since $R_\omega = 1\ \Omega$ and $C_\omega = 1$ F,

$$v_\omega = -\int v_\alpha \, dt$$

So v_ω is proportional to $-\ddot{\theta}(t)$ and 1 V equals -1 deg/s. Similarly, the output of the second integrator must be

$$v_\theta = -\int v_\omega \, dt$$

where $v_\theta(t)$ is proportional to $\theta(t)$ and 1 V equals 1 degree. The outputs of the integrators are then fed back as inputs to the summing op-amp. Note that the dependent sources, E_ω and E_{wind}, re-create the coefficient on $\dot{\theta}(t)$ in Eq. (14.21); that is,

$$2\zeta\omega_0 = (2)(0.2)(2\pi)\zeta = 0.01156 - 0.00033U$$

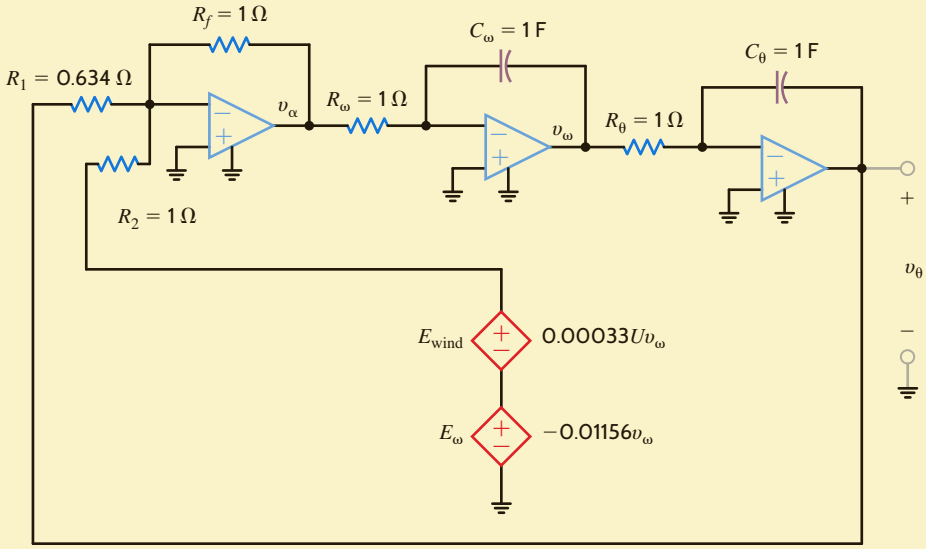

Figure 14.30
Circuit diagram for Tacoma Narrows Bridge simulations.

To simulate various wind speeds, we need only change the gain factor of E_{wind}. Finally, we can solve the circuit for $v_\alpha(t)$:

$$v_\alpha(t) = -\left(\frac{R_f}{R_2}\right)(E_\omega - E_{\text{wind}}) - \left(\frac{R_f}{R_1}\right)v_\theta$$

which matches Eq. (14.23) if

$$\frac{R_f}{R_1} = \omega_0^2 = [2\pi(0.2)]^2 = 1.579$$

and

$$\frac{R_f}{R_2}[E_\omega - E_{\text{wind}}] = 2\zeta\omega_0$$

or

$$\frac{R_f}{R_2} = 1$$

Thus, if $R_f = R_2 = 1\ \Omega$ and $R_1 = 0.634\ \Omega$, the circuit will simulate the bridge's twisting motion. We will start the twisting oscillations using an initial condition $\theta(0)$ and see whether the bridge oscillations decrease or increase over time.

The first simulation is for a wind speed of 20 mph and one degree of twist. The corresponding output voltage is shown in **Fig. 14.31**. The bridge twists at a frequency of 0.2 Hz and the oscillations decrease exponentially, indicating a nondestructive situation.

Fig. 14.32 shows the output for 35-mph winds and an initial twist of one degree. Notice that the oscillations neither increase nor decrease. This indicates that the damping ratio is zero.

Finally, the simulation at a wind speed of 42 mph and one degree initial twist is shown in **Fig. 14.33**. The twisting becomes worse and worse until after 45 minutes, the bridge is twisting ±12.5 degrees, which matches values reported by Billah and Scalan for collapse.

Figure 14.31

Tacoma Narrows Bridge simulation at 20-mph wind speed and one degree twist initial condition.

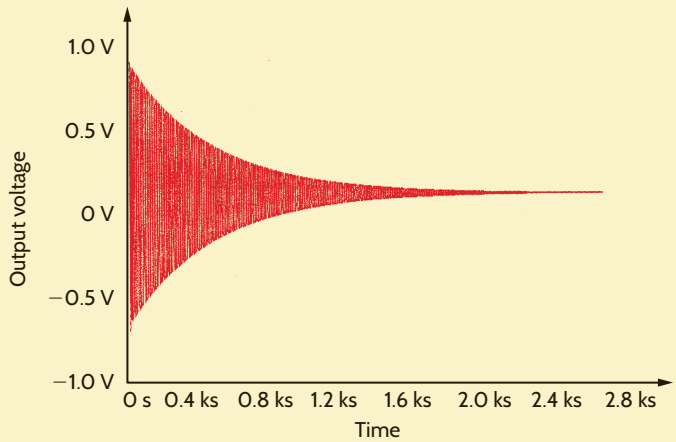

Figure 14.32

Tacoma Narrows Bridge simulation at 35-mph winds and one degree of initial twist.

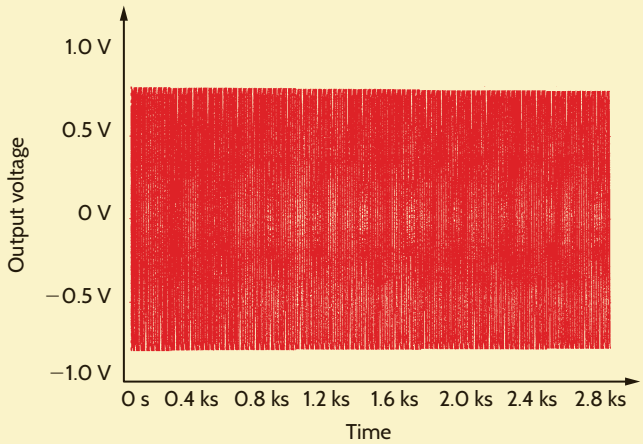

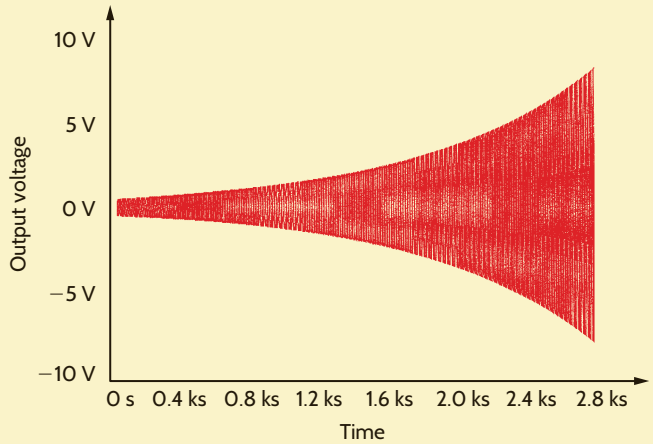

Figure 14.33

Tacoma Narrows Bridge simulation at 42-mph wind speed and one degree of initial twist.

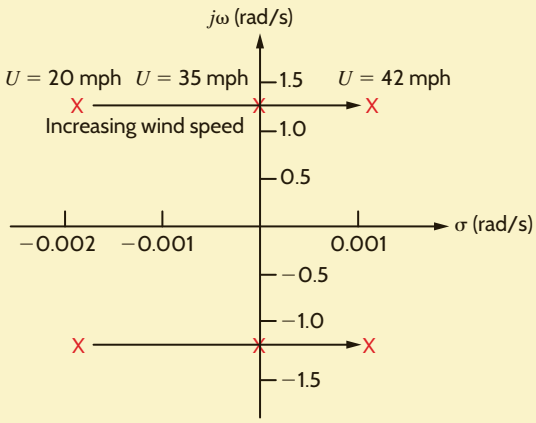

Figure 14.34

Polo-zero plot for Tacoma Narrows Bridge second-order model at wind speeds of 20, 35, and 42 mph.

The dependency of the damping ratio on wind speed can also be demonstrated by investigating how the system poles change with the wind. The characteristic equation for the system is

$$s^2 + 2\zeta\omega_0 s + \omega_0^2 = 0$$

or

$$s^2 + (0.01156 - 0.00033U)s + 1.579 = 0$$

The roots of the characteristic equation yield the pole locations. **Fig. 14.34** shows the system poles at wind speeds of 20, 35, and 42 mph. Note that at 20 mph, the stable situation is shown in Fig. 14.31, and the poles are in the left half of the s-plane. At 35 mph ($\zeta = 0$) the poles are on the $j\omega$ axis and the system is oscillatory, as shown in Fig. 14.32. Finally, at 42 mph, we see that the poles are in the right half of the s-plane, and from Fig. 14.33 we know this is an unstable system. This relationship between pole location and transient response is true for all systems—right-half plane poles result in unstable systems.

14.5 Steady-State Response

In Section 14.3 we have demonstrated, using a variety of examples, the power of the Laplace transform technique in determining the complete response of a network. This complete response is composed of transient terms, which disappear as $t \to \infty$, and steady-state terms, which are present at all times. Let us now examine a method by which to determine the steady-state response of a network directly. Recall from previous examples that the network response can be written as

$$\mathbf{Y}(s) = \mathbf{H}(s)\mathbf{X}(s) \qquad \textbf{14.24}$$

where $\mathbf{Y}(s)$ is the output or response, $\mathbf{X}(s)$ is the input or forcing function, and $\mathbf{H}(s)$ is the network function or transfer function defined in Section 12.1. The transient portion of

the response $\mathbf{Y}(s)$ results from the poles of $\mathbf{H}(s)$, and the steady-state portion of the response results from the poles of the input or forcing function.

As a direct parallel to the sinusoidal response of a network as outlined in Section 8.2, we assume that the forcing function is of the form

$$x(t) = X_M e^{j\omega_0 t} \tag{14.25}$$

which by Euler's identity can be written as

$$x(t) = X_M \cos \omega_0 t + jX_M \sin \omega_0 t \tag{14.26}$$

The Laplace transform of Eq. (14.25) is

$$\mathbf{X}(s) = \frac{X_M}{s - j\omega_0} \tag{14.27}$$

and therefore,

$$\mathbf{Y}(s) = \mathbf{H}(s)\left(\frac{X_M}{s - j\omega_0}\right) \tag{14.28}$$

At this point, we tacitly assume that $\mathbf{H}(s)$ does not have any poles of the form $(s - j\omega_k)$. If, however, this is the case, we simply encounter difficulty in defining the steady-state response.

Performing a partial fraction expansion of Eq. (14.28) yields

$$\mathbf{Y}(s) = \frac{X_M \mathbf{H}(j\omega_0)}{s - j\omega_0} + \text{terms that occur due to the poles of } \mathbf{H}(s) \tag{14.29}$$

The first term to the right of the equal sign can be expressed as

$$\mathbf{Y}(s) = \frac{X_M |\mathbf{H}(j\omega_0)| e^{j\phi(j\omega_0)}}{s - j\omega_0} + \cdots \tag{14.30}$$

since $\mathbf{H}(j\omega_0)$ is a complex quantity with a magnitude and phase that are a function of $j\omega_0$.

Performing the inverse transform of Eq. (14.30), we obtain

$$\begin{aligned} y(t) &= X_M |\mathbf{H}(j\omega_0)| e^{j\omega_0 t} e^{j\phi(j\omega_0)} + \cdots \\ &= X_M |\mathbf{H}(j\omega_0)| e^{(j\omega_0 t + \phi(j\omega_0))} + \cdots \end{aligned} \tag{14.31}$$

and hence the steady-state response is

$$y_{ss}(t) = X_M |\mathbf{H}(j\omega_0)| e^{j(\omega_0 t + \phi(j\omega_0))} \tag{14.32}$$

HINT

The transient terms disappear in steady state.

Since the actual forcing function is $X_M \cos \omega_0(t)$, which is the real part of $X_M e^{j\omega_0 t}$, the steady-state response is the real part of Eq. (14.32):

$$y_{ss}(t) = X_M |\mathbf{H}(j\omega_0)| \cos[\omega_0 t + \phi(j\omega_0)] \tag{14.33}$$

In general, the forcing function may have a phase angle θ. In this case, θ is simply added to $\phi(j\omega_0)$ so that the resultant phase of the response is $\phi(j\omega_0) + \theta$.

EXAMPLE 14.13

For the circuit shown in Fig. 14.35a, we wish to determine the steady-state voltage $v_{oss}(t)$ for $t > 0$ if the initial conditions are zero.

SOLUTION

As illustrated earlier, this problem could be solved using a variety of techniques, such as node equations, mesh equations, source transformation, and Thévenin's theorem. We will employ node equations to obtain the solution. The transformed network using the impedance values for the parameters is shown in Fig. 14.35b. The node equations for this network are

$$\left(\frac{1}{2} + \frac{1}{s} + \frac{s}{2}\right)\mathbf{V}_1(s) - \left(\frac{s}{2}\right)\mathbf{V}_o(s) = \frac{1}{2}\mathbf{V}_i(s)$$

$$-\left(\frac{s}{2}\right)\mathbf{V}_1(s) + \left(\frac{s}{2} + 1\right)\mathbf{V}_o(s) = 0$$

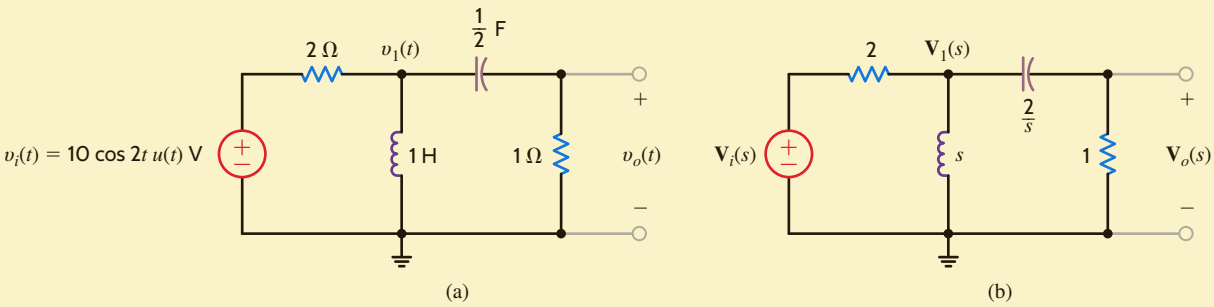

Figure 14.35

Circuits used in Example 14.13.

Solving these equations for $\mathbf{V}_o(s)$, we obtain

$$\mathbf{V}_o(s) = \frac{s^2}{3s^2 + 4s + 4}\mathbf{V}_i(s)$$

Note that this equation is in the form of Eq. (14.24), where $\mathbf{H}(s)$ is

$$\mathbf{H}(s) = \frac{s^2}{3s^2 + 4s + 4}$$

Since the forcing function is $10 \cos 2t\, u(t)$, then $V_M = 10$ and $\omega_0 = 2$. Hence,

$$\begin{aligned}\mathbf{H}(j2) &= \frac{(j2)^2}{3(j2)^2 + 4(j2) + 4}\\ &= 0.354\underline{/45^\circ}\end{aligned}$$

Therefore,

$$\begin{aligned}|\mathbf{H}(j2)| &= 0.354\\ \phi(j2) &= 45^\circ\end{aligned}$$

and, hence, the steady-state response is

$$\begin{aligned}v_{oss}(t) &= V_M|\mathbf{H}(j2)| \cos[2t + \phi(j2)]\\ &= 3.54 \cos(2t + 45^\circ)\text{ V}\end{aligned}$$

The complete (transient plus steady-state) response can be obtained from the expression

$$\begin{aligned}\mathbf{V}_o(s) &= \frac{s^2}{3s^2 + 4s + 4}\mathbf{V}_i(s)\\ &= \frac{s^2}{3s^2 + 4s + 4}\left(\frac{10s}{s^2 + 4}\right)\\ &= \frac{10s^3}{(s^2 + 4)(3s^2 + 4s + 4)}\end{aligned}$$

Determining the inverse Laplace transform of this function using the techniques of Chapter 13, we obtain

$$v_o(t) = 3.54 \cos(2t + 45^\circ) + 1.44e^{-(2/3)t} \cos\left(\frac{2\sqrt{2}}{3}t - 55^\circ\right)\text{ V}$$

Note that as $t \to \infty$ the second term approaches zero, and thus the steady-state response is

$$v_{oss}(t) = 3.54 \cos(2t + 45^\circ)\text{ V}$$

which can easily be checked using a phasor analysis.

LEARNING ASSESSMENTS

E14.14 Determine the steady-state voltage $v_{oss}(t)$ in the network in Fig. E14.14 for $t > 0$ if the initial conditions in the network are zero.

ANSWER:
$v_{oss}(t) = 3.95 \cos (2t - 99.46°)$ V.

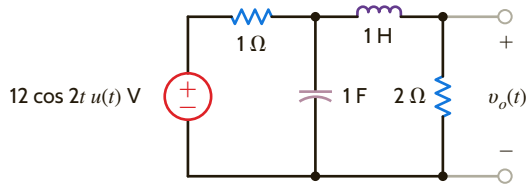

Figure E14.14

E14.15 Find the steady-state response $v_{oss}(t)$ in Fig. E14.15.

ANSWER:
$v_{oss}(t) = 2.98 \cos (2t + 153.43°)$ V.

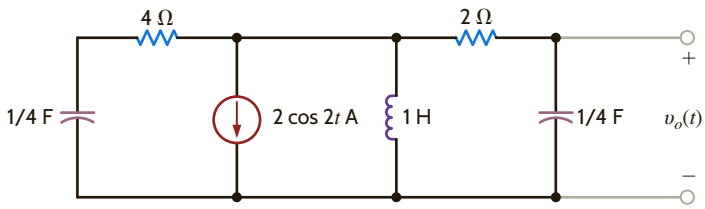

Figure E14.15

SUMMARY

- The use of s-domain models for circuit elements permits us to describe them with algebraic, rather than differential, equations.
- All the dc analysis techniques, including the network theorems, are applicable in the s-domain. Once the s-domain solution is obtained, the inverse transform is used to obtain a time domain solution.
- The roots of the network's characteristic equation (i.e., the poles) determine the type of network response. A plot of these roots in the left half of the s-plane provides an immediate indication of the network's behavior. The relationship between the pole-zero plot and the Bode plot provides further insight.
- The transfer (network) function for a network is expressed as

$$\mathbf{H}(s) = \frac{\mathbf{Y}(s)}{\mathbf{X}(s)}$$

where $\mathbf{Y}(s)$ is the network response and $\mathbf{X}(s)$ is the input forcing function. If the transfer function is known, the output response is simply given by the product $\mathbf{H}(s)\mathbf{X}(s)$. If the input is an impulse function so that $\mathbf{X}(s) = 1$, the impulse response is equal to the inverse Laplace transform of the network function.
- The dc properties of the storage elements, L and C, can be used to obtain initial and final conditions. The initial conditions are required as a part of the s-domain model, and final conditions are often useful in verifying a solution.
- The Laplace transform solution for the network response is composed of transient terms, which disappear as $t \to \infty$, and steady-state terms, which are present at all times.
- The network response can be expressed as

$$\mathbf{Y}(s) = \mathbf{H}(s)\mathbf{X}(s)$$

The transient portion of the response $\mathbf{Y}(s)$ results from the poles of $\mathbf{H}(s)$, and the steady-state portion of the response results from the poles of the forcing function $\mathbf{X}(s)$.

PROBLEMS

14.1 Find the input impedance $\mathbf{Z}(s)$ in the network in Fig. P14.1.

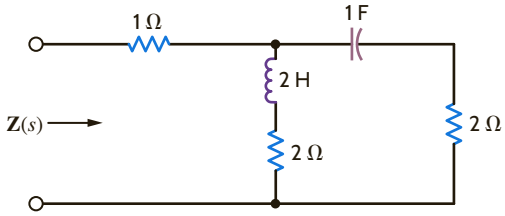

Figure P14.1

14.2 Find the input impedance $\mathbf{Z}(s)$ of the network in Fig. P14.2.

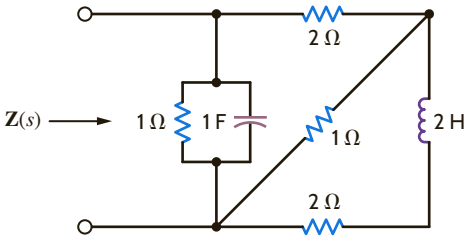

Figure P14.2

14.3 Find the input impedance $\mathbf{Z}(s)$ of the network in Fig. P14.3 (a) when the terminals B-B' are open circuited and (b) when the terminals B-B' are short circuited.

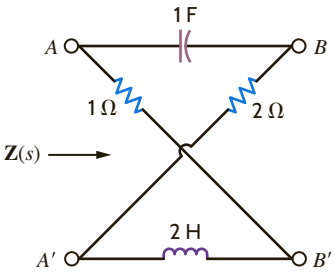

Figure P14.3

14.4 Find $v_o(t)$, $t > 0$, in the network in Fig. P14.4.

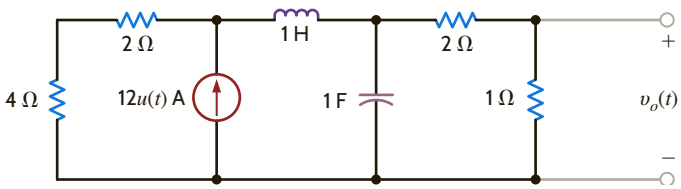

Figure P14.4

14.5 Find $v_o(t)$, $t > 0$, in the network in Fig. P14.5 using node equations.

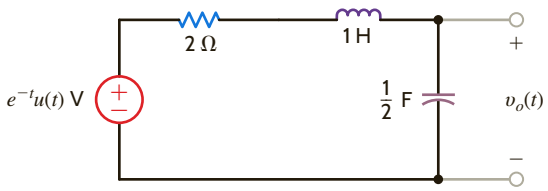

Figure P14.5

14.6 Use Laplace transforms and nodal analysis to find $i_1(t)$ for $t > 0$ in the network shown in Fig. P14.6. Assume zero initial conditions.

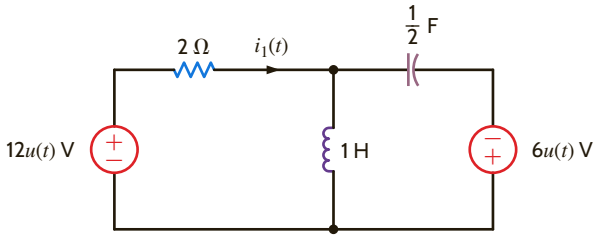

Figure P14.6

14.7 Use Laplace transforms to find $v(t)$ for $t > 0$ in the network shown in Fig. P14.7. Assume zero initial conditions.

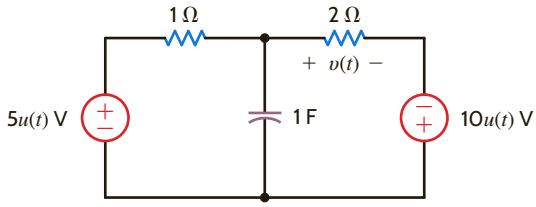

Figure P14.7

14.8 For the network shown in Fig. P14.8, find $v_o(t)$, $t > 0$.

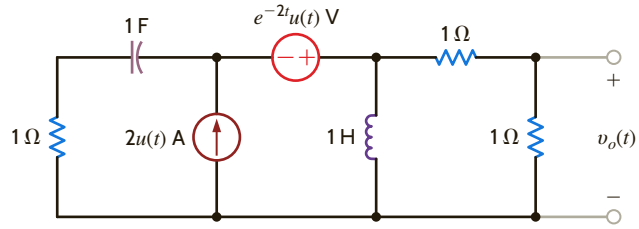

Figure P14.8

14.9 For the network shown in Fig. P14.9, find $i_o(t)$, $t > 0$.

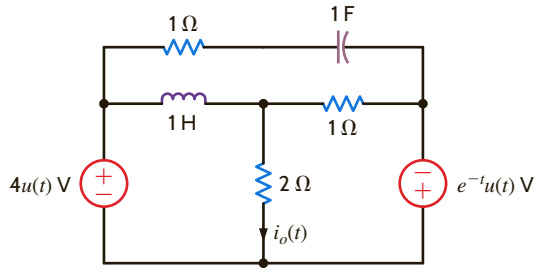

Figure P14.9

14.10 Use nodal analysis to find $v_o(t)$, $t > 0$, in the network in Fig. P14.10.

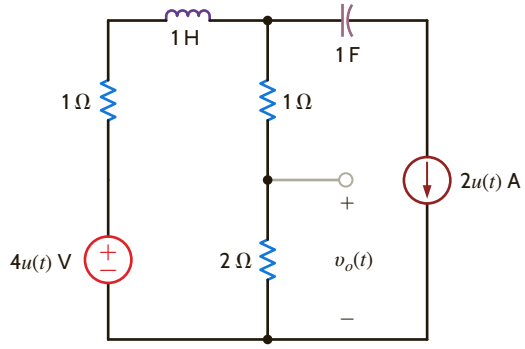

Figure P14.10

14.11 Use nodal analysis to find $i_o(t)$ in the network in Fig. P14.11.

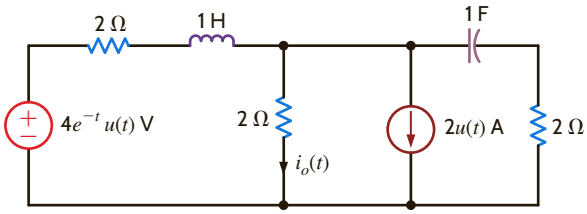

Figure P14.11

14.12 Find $v_o(t)$, $t > 0$, in the network shown in Fig. P14.12 using nodal analysis.

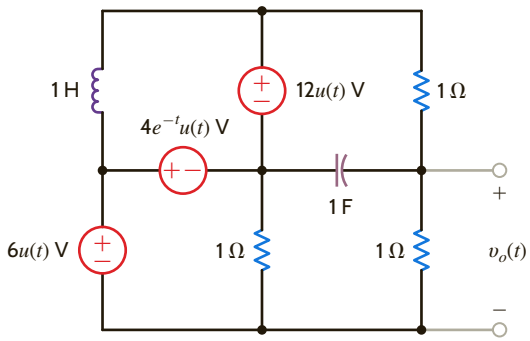

Figure P14.12

14.13 Find $v_o(t)$, $t > 0$, in the network in Fig. P14.13.

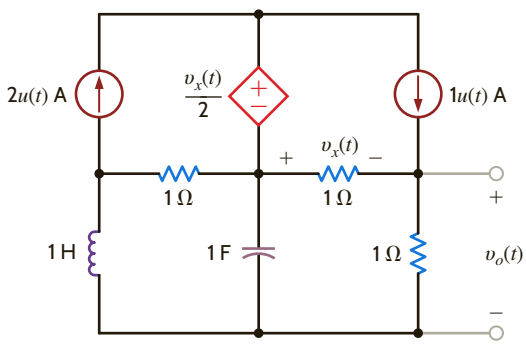

Figure P14.13

14.14 Use Laplace transforms and mesh analysis to find $v_o(t)$ for $t > 0$ in the network shown in Fig. P14.14. Assume zero initial conditions.

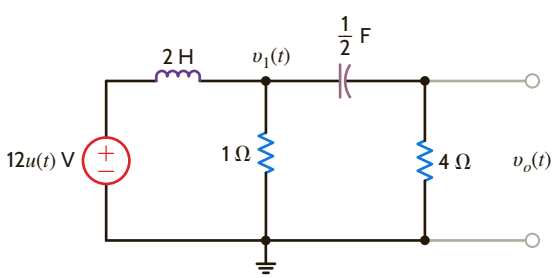

Figure P14.14

14.15 Solve Problem 14.14 using Laplace transforms and nodal analysis.

14.16 Use nodal analysis to find $i_o(t)$ in the network in Fig. P14.16.

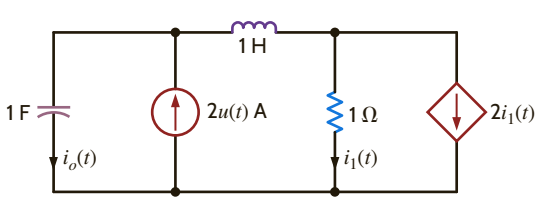

Figure P14.16

14.17 Use loop equations to find $i_1(t)$ in the network in Fig. P14.17.

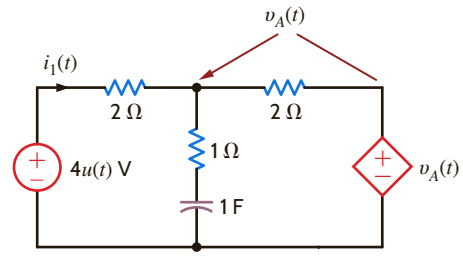

Figure P14.17

14.18 For the network shown in Fig. P14.18, find $v_o(t)$, $t > 0$, using mesh equations.

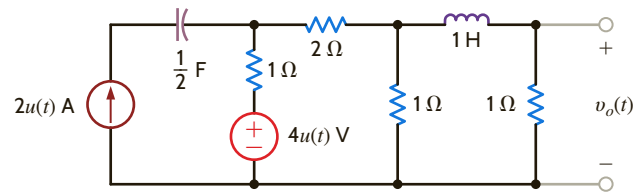

Figure P14.18

14.19 Use mesh equations to find $v_o(t)$, $t > 0$, in the network in Fig. P14.19.

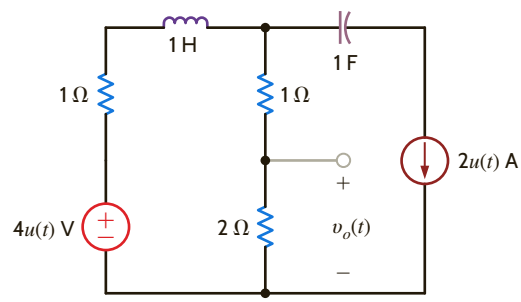

Figure P14.19

14.20 Use loop analysis to find $v_o(t)$ for $t > 0$ in the network in Fig. P14.20.

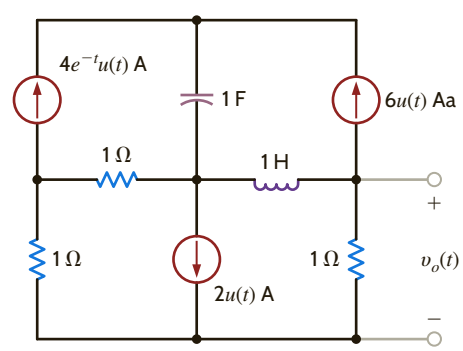

Figure P14.20

14.21 For the network shown in Fig. 14.21, find $v_o(t)$, $t > 0$, using node equations.

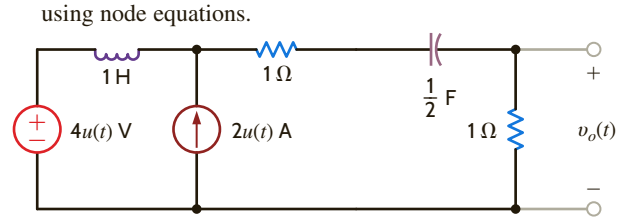

Figure P14.21

14.22 For the network shown in Fig. P14.22, find $v_o(t)$, $t > 0$, using loop equations.

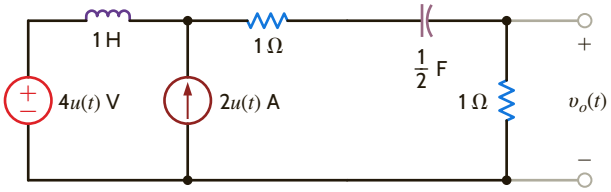

Figure P14.22

14.23 Use loop equations to find $i_o(t)$, $t > 0$, in the network shown in Fig. P14.23.

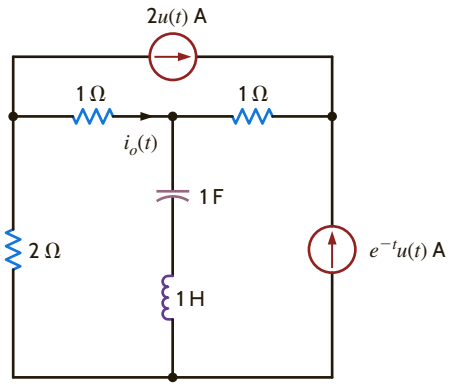

Figure P14.23

14.24 Use mesh analysis to find $v_o(t)$ for $t > 0$ in the network in Fig. P14.24.

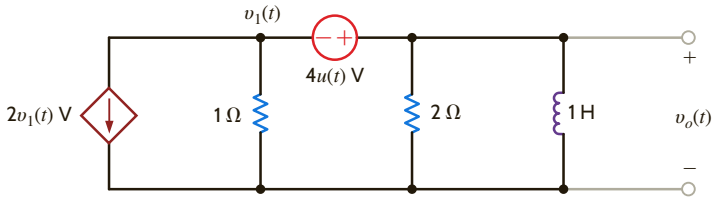

Figure P14.24

14.25 Use mesh analysis to find $v_o(t)$, $t > 0$, in the network in Fig. P14.25.

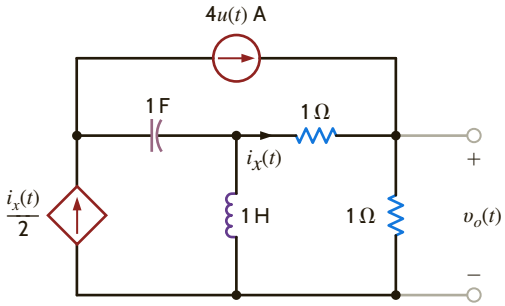

Figure P14.25

14.26 Use superposition to solve Problem 14.11.

14.27 Use superposition to find $v_o(t)$, $t > 0$, in the network shown in Fig. P14.27.

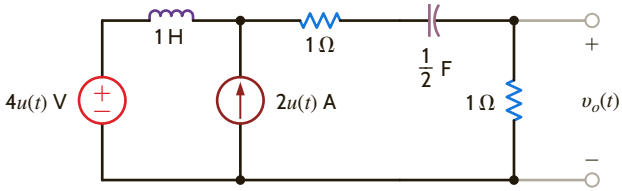

Figure P14.27

14.28 Use superposition to find $v_o(t)$, $t > 0$, in the network in Fig. P14.28.

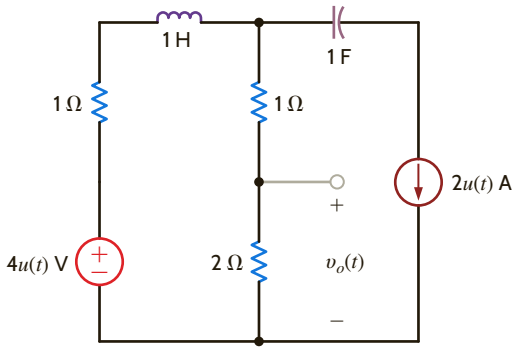

Figure P14.28

14.29 Solve Problem 14.14 using Laplace transforms and source transformation.

14.30 Use source exchange to solve Problem 14.11.

14.31 Use source transformation to find $v_o(t)$, $t > 0$, in the circuit in Fig. P14.31.

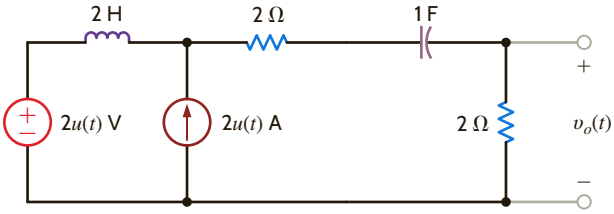

Figure P14.31

14.32 Solve Problem 14.14 using Laplace transforms and Thévenin's theorem.

14.33 Use Thévenin's theorem to solve Problem 14.16.

14.34 Use Thévenin's theorem to solve Problem 14.17.

14.35 Use Thévenin's theorem to find $i_o(t)$, $t > 0$, in Fig. P14.35.

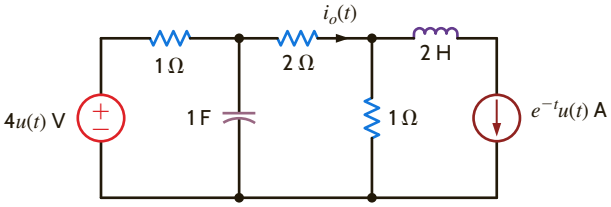

Figure P14.35

14.36 Use Thévenin's theorem to find $v_o(t)$, $t > 0$, in the network in Fig. P14.36.

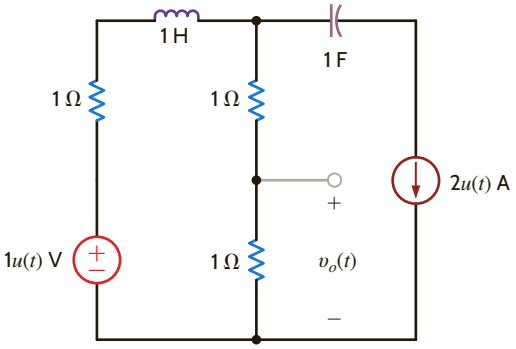

Figure P14.36

14.37 Find $v_o(t)$, $t > 0$, in the network in Fig. P14.37 using Thévenin's theorem.

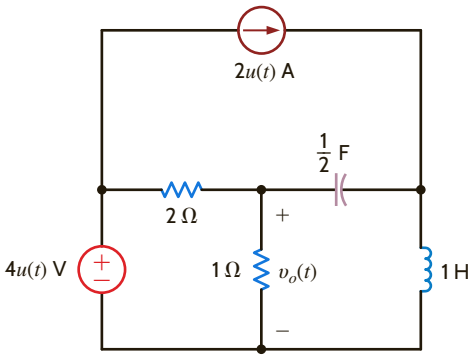

Figure P14.37

14.38 Use Thévenin's theorem to find $v_o(t)$, $t > 0$, in Fig. P14.38.

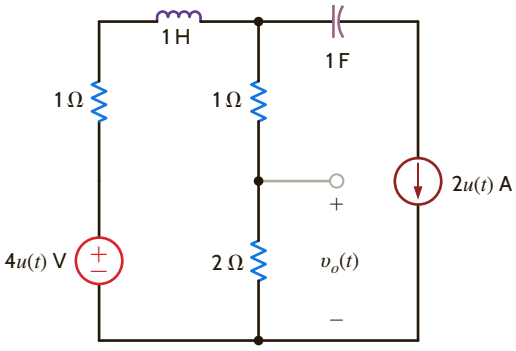

Figure P14.38

14.39 Use Thévenin's theorem to determine $i_o(t)$, $t > 0$, in the circuit shown in Fig. P14.39.

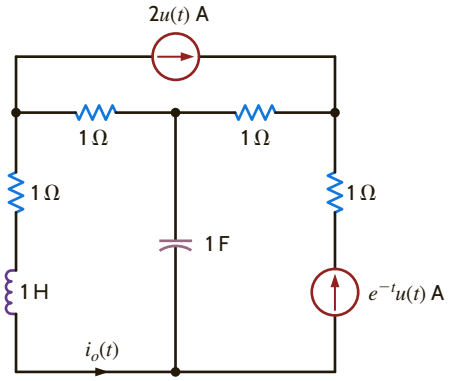

Figure P14.39

14.40 Use Thévenin's theorem to find $v_o(t)$, $t > 0$, in the network in Fig. P14.40.

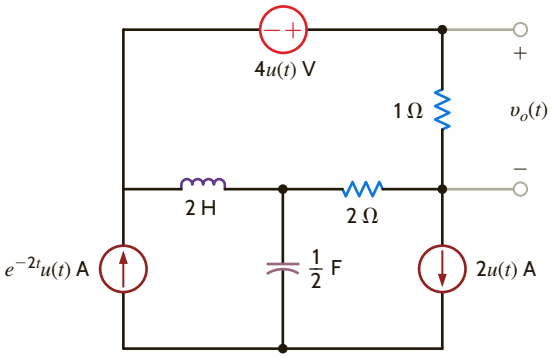

Figure P14.40

14.41 Use Thévenin's theorem to find $v_o(t)$, $t > 0$, in the network in Fig. P14.41.

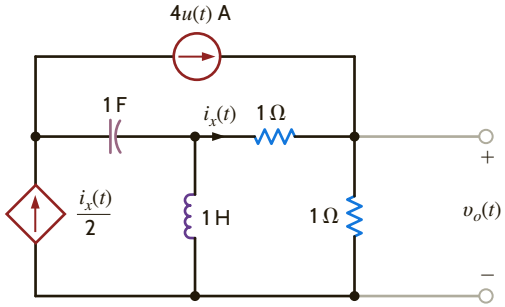

Figure P14.41

14.42 Use Thévenin's theorem to find $v_o(t)$, $t > 0$, in the network shown in Fig. P14.42.

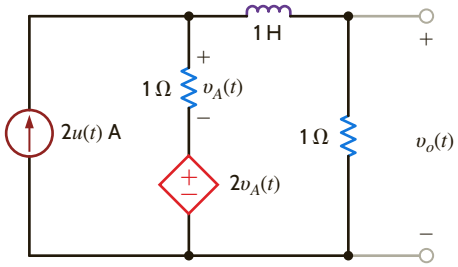

Figure P14.42

14.43 Use Thévenin's theorem to find $i_o(t)$, $t > 0$, in the network shown in Fig. P14.43.

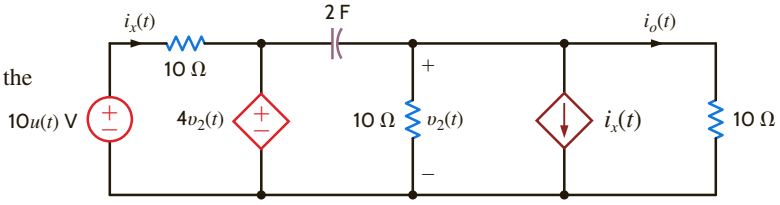

Figure P14.43

14.44 Find $i_o(t)$, $t > 0$, in the network shown in Fig. P14.44.

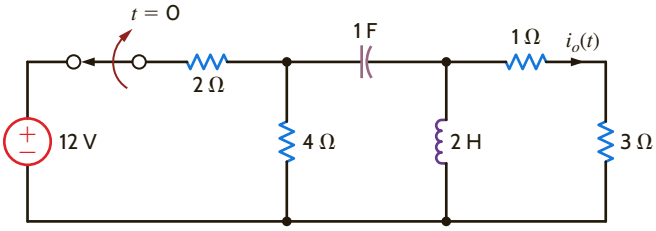

Figure P14.44

14.45 Find $i_o(t)$, $t > 0$, in the network shown in Fig. P14.45.

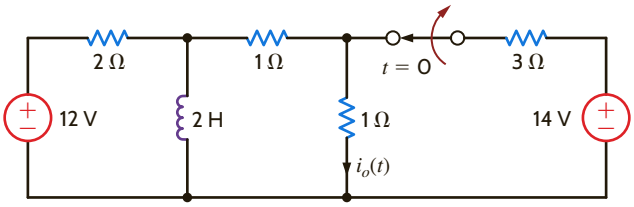

Figure P14.45

14.46 Find $i_o(t)$, $t > 0$, in the network in Fig. P14.46.

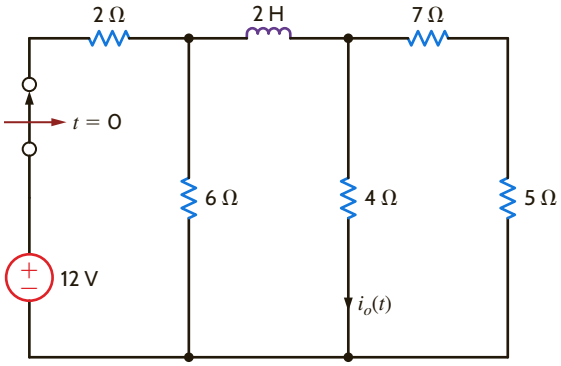

Figure P14.46

14.47 Find $v_o(t)$ for $t > 0$ in the network in Fig. P14.47.

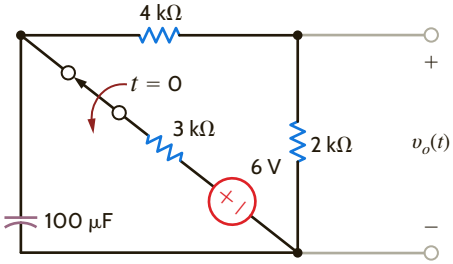

Figure P14.47

14.48 Find $v_o(t)$ for $t > 0$ in the network shown in Fig. P14.48.

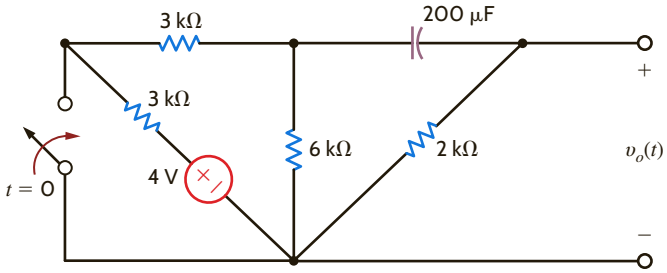

Figure P14.48

14.49 Find $i_o(t)$ for $t > 0$ in the network shown in Fig. P14.49.

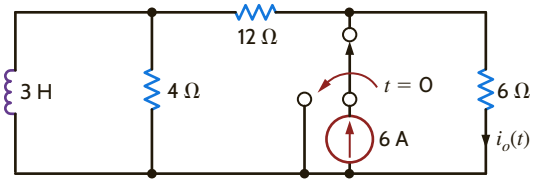

Figure P14.49

14.50 Find $v_o(t)$ for $t > 0$ in the network shown in Fig. P14.50.

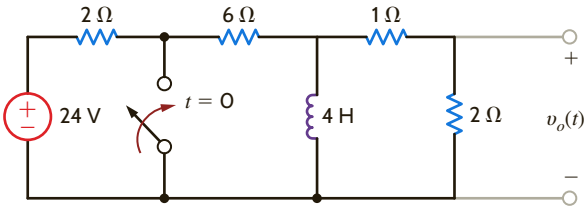

Figure P14.50

14.51 Find $v_o(t)$ for $t > 0$ in the network shown in Fig. P14.51.

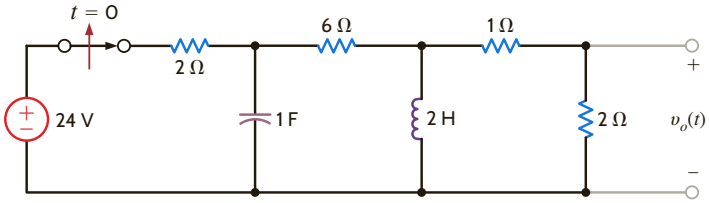

Figure P14.51

14.52 Find $v_o(t)$, $t > 0$, in the network shown in Fig. P14.52.

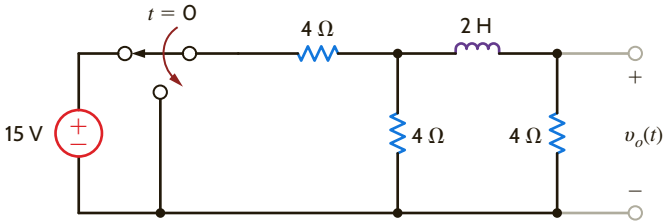

Figure P14.52

14.53 Find $i(t)$, $t > 0$, in the network shown in Fig. P14.53.

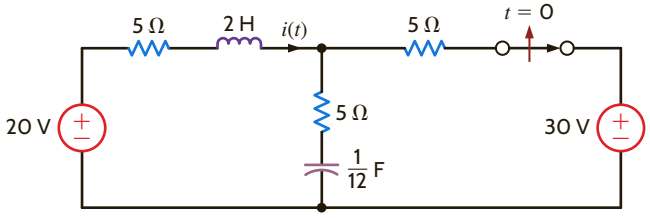

Figure P14.53

14.54 Find $v_o(t)$, $t > 0$, in the network in Fig. P14.54.

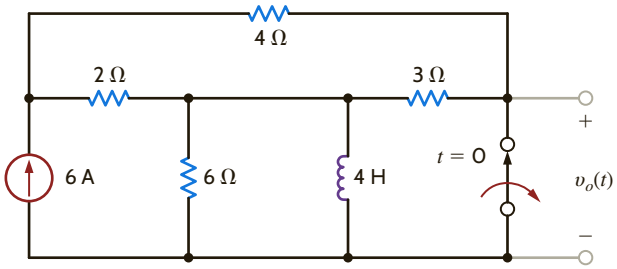

Figure P14.54

14.55 Find $i_o(t)$, $t > 0$, in the network in Fig. P14.55.

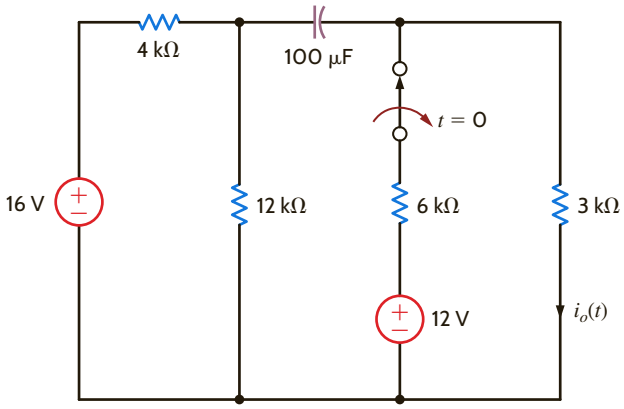

Figure P14.55

14.56 Find $v_o(t)$, $t > 0$, in the network shown in Fig. P14.56.

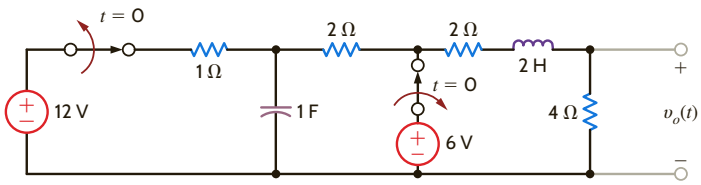

Figure P14.56

14.57 Find $v_o(t)$, for $t > 0$, in the network in Fig. P14.57.

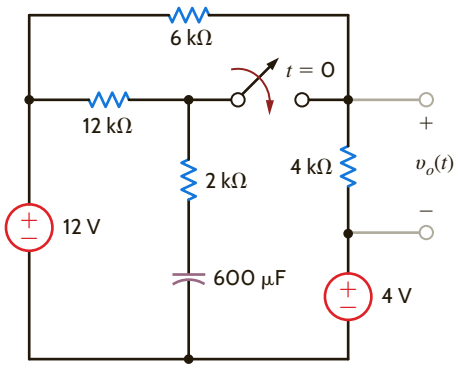

Figure P14.57

14.58 Find $v_o(t)$ for $t > 0$ in the network in Fig. P14.58.

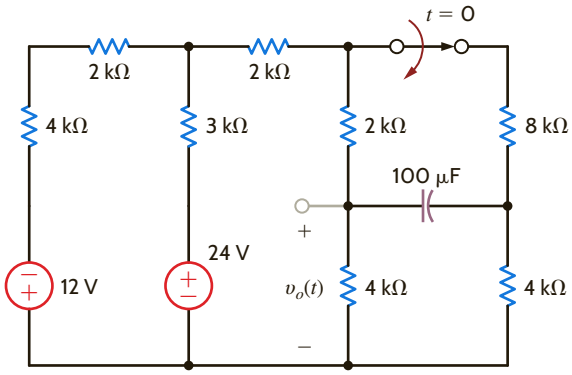

Figure P14.58

14.59 Find $v_o(t)$ for $t > 0$ in the network in Fig. P14.59.

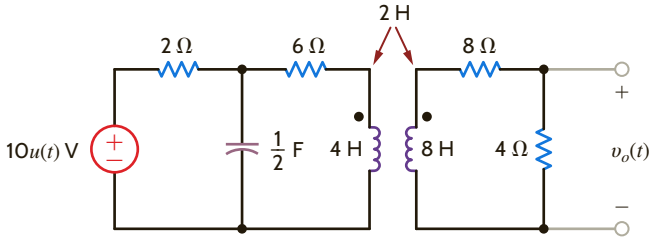

Figure P14.59

14.60 Find $v_o(t)$ for $t > 0$ in the network in Fig. P14.60.

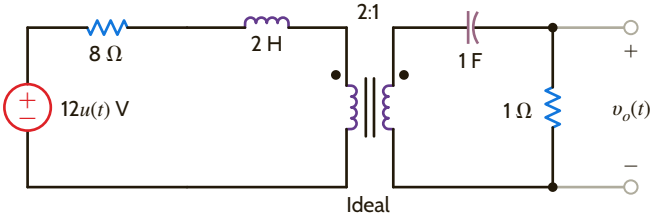

Figure P14.60

14.61 Determine the initial and final values of the current $i(t)$ in the network shown in Fig. P14.61.

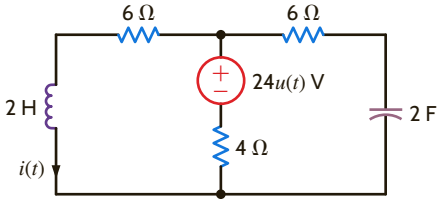

Figure P14.61

14.62 Determine the initial and final values of the voltage $v_o(t)$ in the network in Fig. P14.62.

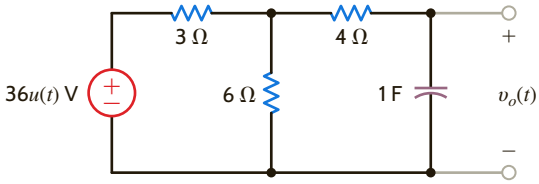

Figure P14.62

14.63 Find $v_o(t)$ for $t > 0$ in the network in Fig. P14.63.

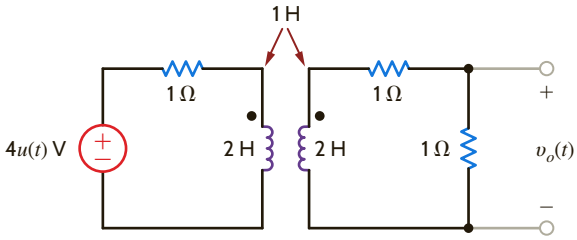

Figure P14.63

14.64 Find $v_o(t)$ for $t > 0$ in the network in Fig. P14.64.

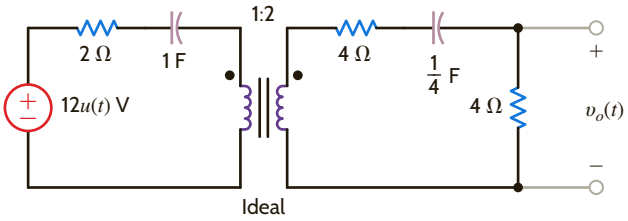

Figure P14.64

14.65 For the network shown in Fig. P14.65, determine the value of the output voltage as $t \to \infty$.

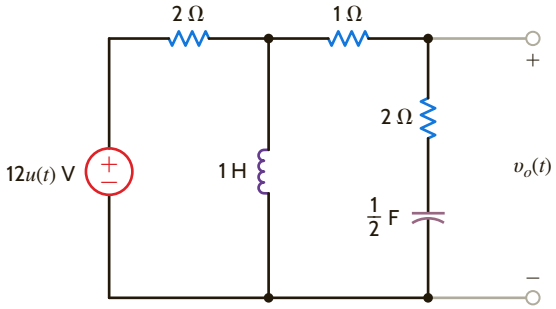

Figure P14.65

14.66 Determine the initial and final values of the voltage $v_o(t)$ in the network in Fig. P14.66.

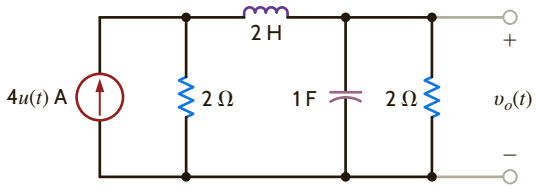

Figure P14.66

14.67 Given the network in Fig. P14.67, determine the value of the output voltage as $t \to \infty$.

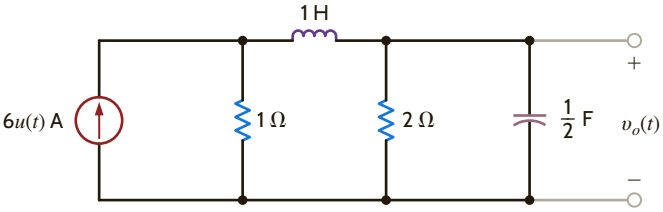

Figure P14.67

14.68 Determine the output voltage $v_o(t)$ in the network in Fig. P14.68a if the input is given by the source in Fig. P14.68b.

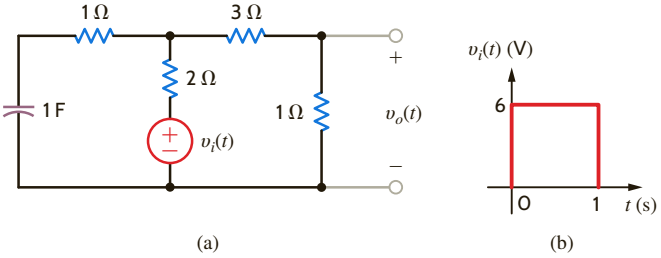

Figure P14.68

14.69 Determine the output voltage, $v_o(t)$, in the circuit in Fig. P14.69a if the input is represented by the waveform shown in Fig. P14.69b.

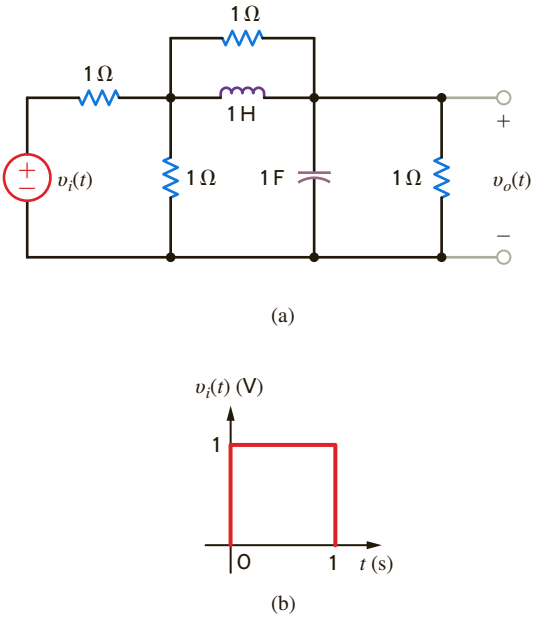

Figure P14.69

14.70 Determine the transfer function $\mathbf{I}_o(s)/\mathbf{I}_i(s)$ for the network shown in Fig. P14.70.

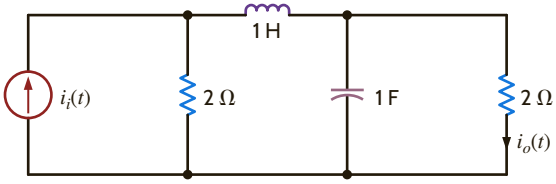

Figure P14.70

14.71 Find the transfer function $\mathbf{V}_o(s)/\mathbf{V}_i(s)$ for the network shown in Fig. P14.71.

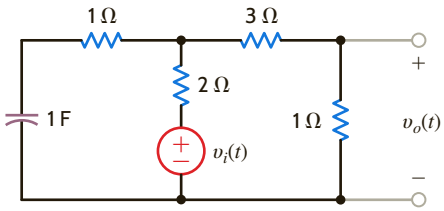

Figure P14.71

14.72 For the network in Fig. P14.72, choose the value of C for critical damping.

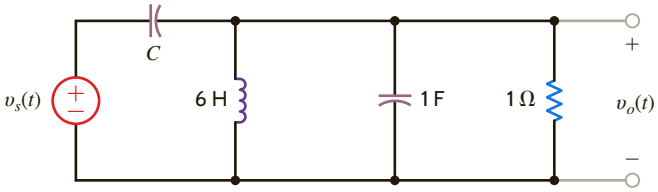

Figure P14.72

14.73 The voltage response of the network to a unit step input is

$$\mathbf{V}_o(s) = \frac{2(s+1)}{s(s^2+10s+25)}$$

Is the response overdamped?

14.74 Find the output voltage, $v_o(t)$, $t > 0$, in the network in Fig. P14.74a if the input is represented by the waveform shown in Fig. P14.74b.

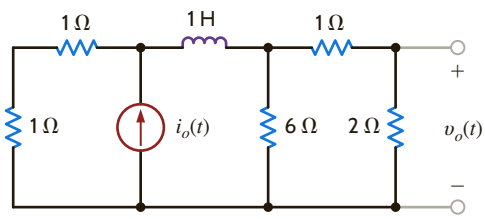

(a)

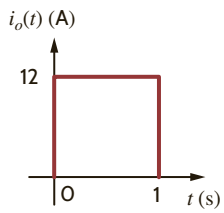

(b)

Figure P14.74

14.75 The voltage response of a network to a unit step input is $\mathbf{V}_o(s) = \dfrac{2(s+1)}{s(s^2+12s+37)}$. Is the response underdamped?

14.76 The transfer function of a network is given by the expression $\mathbf{G}(s) = \dfrac{2(s+10)}{s^2+6s+9}$. Determine the damping ratio, the undamped natural frequency, and the type of response that will be exhibited by the network.

14.77 The transfer function of the network is given by the expression

$$\mathbf{G}(s) = \frac{100s}{s^2+13s+40}$$

Determine the damping ratio, the undamped natural frequency, and the type of response that will be exhibited by the network.

14.78 The voltage response of a network to a unit step input is

$$\mathbf{V}_o(s) = \frac{10}{s(s^2+8s+18)}$$

Is the response critically damped?

14.79 The transfer function of the network is given by the expression

$$\mathbf{G}(s) = \frac{100s}{s^2+22s+40}$$

Determine the damping ratio, the undamped natural frequency, and the type of response that will be exhibited by the network.

14.80 Find the steady-state response $i_o(t)$ in the network shown in Fig. P14.80.

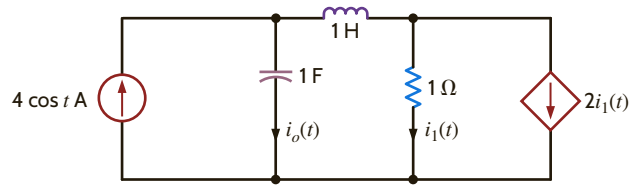

Figure P14.80

14.81 Find the steady-state response $v_o(t)$ in the network shown in Fig. P14.81.

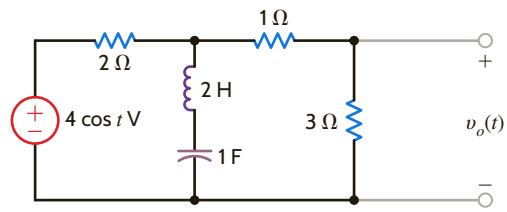

Figure P14.81

14.82 Find the steady-state response $v_o(t)$ in the network shown in Fig. P14.82.

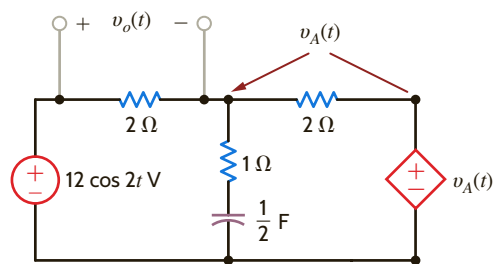

Figure P14.82

14.83 Determine the steady-state response $v_o(t)$ for the network in Fig. P14.83.

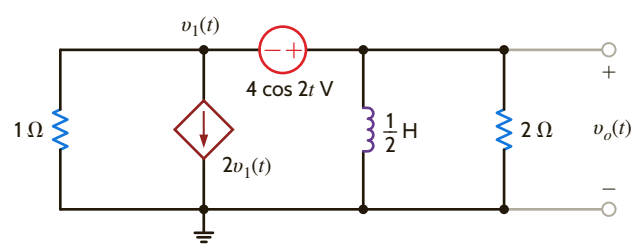

Figure P14.83

14.84 Find the steady-state response $i_o(t)$ for the network shown in Fig. P14.84.

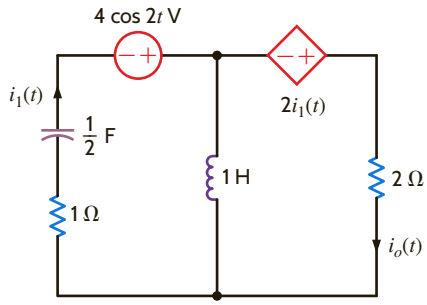

Figure P14.84

14.85 Find the steady-state response $v_o(t)$ for the circuit shown in Fig. P14.85.

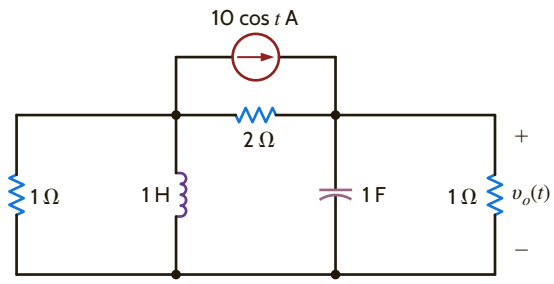

Figure P14.85

14.86 Find the steady-state response $v_o(t)$ for the network in Fig. P14.86.

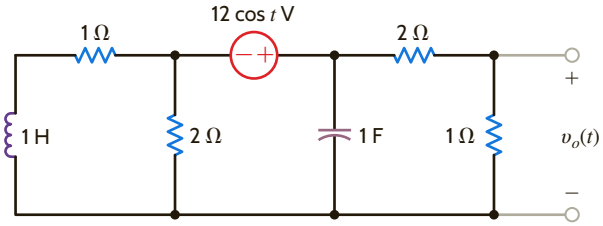

Figure P14.86

14.87 Find the steady-state response $v_o(t)$, $t > 0$, in the network in Fig. P14.87.

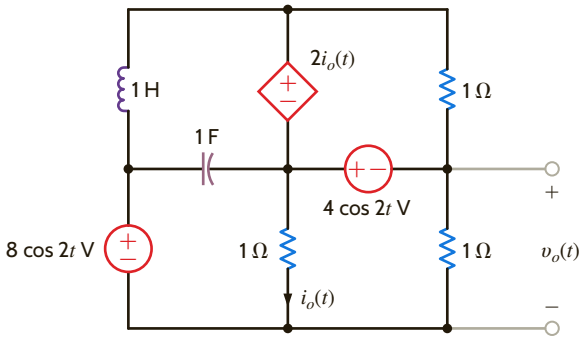

Figure P14.87

14.88 Determine the steady-state response $i_o(t)$ for the network in Fig. P14.88.

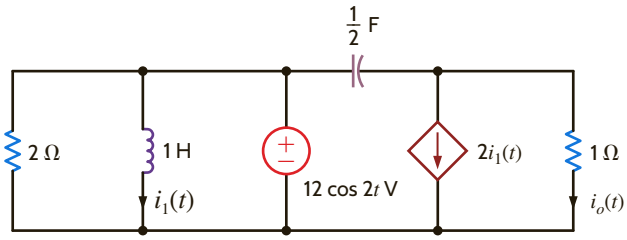

Figure P14.88

14.89 Find the steady-state response $v_o(t)$, $t > 0$, in the network in Fig. P14.89.

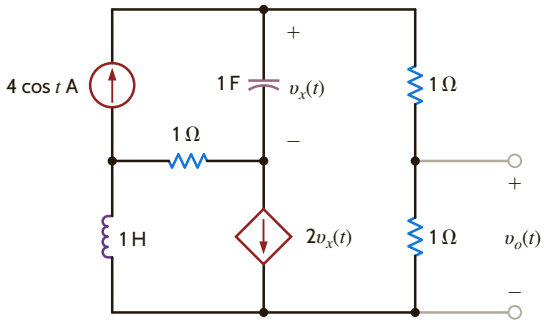

Figure P14.89

TYPICAL PROBLEMS FOUND ON THE FE EXAM

14PFE-1 A single-loop, second-order circuit is described by the following differential equation:

$$2\frac{dv^2(t)}{dt^2} + 4\frac{dv(t)}{dt} + 4v(t) = 12u(t) \quad t > 0$$

Which is the correct form of the total (natural plus forced) response?

a. $v(t) = K_1 + K_2e^{-t}$

b. $v(t) = K_1 \cos t + K_2 \sin t$

c. $v(t) = K_1 + K_2te^{-t}$

d. $v(t) = K_1 + K_2e^{-t}\cos t + K_3e^{-t}\sin t$

14PFE-2 If all initial conditions are zero in the network in Fig. 14PFE-2, find the transfer function $\mathbf{V}_o(s)/\mathbf{V}_s(s)$.

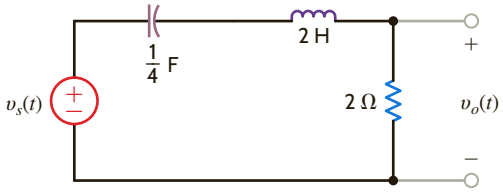

Figure 14PFE-2

a. $\dfrac{s+1}{s^2+4s+6}$

b. $\dfrac{s}{s^2+2s+5}$

c. $\dfrac{s}{s^2+s+2}$

d. $\dfrac{s+2}{s^2+5s+8}$

14PFE-3 The initial conditions in the circuit in Fig. 14PFE-3 are zero. Find the transfer function $\mathbf{I}_o(s)/\mathbf{I}_s(s)$.

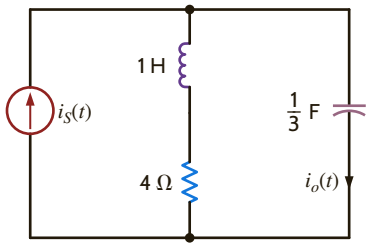

Figure 14PFE-3

a. $\dfrac{s(s+4)}{s^2+4s+3}$ **c.** $\dfrac{s}{s^2+5s+7}$

b. $\dfrac{s+2}{s^2+3s+1}$ **d.** $\dfrac{s+3}{s^2+2s+10}$

14PFE-4 In the circuit in Fig. 14PFE-4, use Laplace transforms to find the current $\mathbf{I}(s)$. Assume zero initial conditions and that $v_s(t) = 4\cos t\, u(t)$ V.

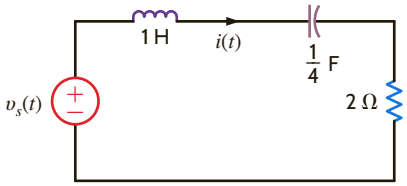

Figure 14PFE-4

a. $\dfrac{2s}{s^2+4s+5}$ **c.** $\dfrac{2s^2}{s^2+7s+9}$

b. $\dfrac{4s^2}{(s^2+1)(s^2+2s+4)}$ **d.** $\dfrac{4s}{(s^2+1)(s^2+3s+5)}$

14PFE-5 Assuming that the initial inductor current is zero in the circuit in Fig. 14PFE-5, find the transfer function $\mathbf{V}_o(s)/\mathbf{V}_s(s)$.

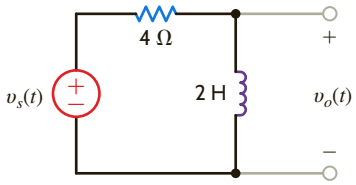

Figure 14PFE-5

a. $\dfrac{s}{s^2+1}$ **c.** $\dfrac{s^2}{s+8}$

b. $\dfrac{s^2}{2s+5}$ **d.** $\dfrac{s}{s+2}$

ChapterFifteen

THE LEARNING GOALS FOR THIS CHAPTER ARE THAT STUDENTS SHOULD BE ABLE TO:

- Determine the trigonometric and exponential Fourier series for a periodic signal.
- Describe the effects of waveform symmetry on the coefficients of a trigonometric Fourier series.
- Use PSpice to determine the Fourier series for a periodic signal.
- Calculate the steady-state response of an electric circuit when excited by a periodic voltage or current signal.
- Analyze electric circuits excited by a periodic voltage or current signal to determine the average power.
- Determine the Fourier transform pairs for signals common to electric circuit analysis.
- Use the Fourier transform to calculate the response of an electric circuit.
- Apply Parseval's theorem to compute the total energy content of a signal.

FOURIER ANALYSIS TECHNIQUES

AN EXPERIMENT THAT HELPS STUDENTS DEVELOP AN UNDERSTANDING OF FOURIER TECHNIQUES IN CIRCUIT ANALYSIS IS:

- Generating Voltage Signals from a Fourier Series: Separate the Fourier components of square and triangular waveforms using MATLAB, PSpice, an arbitrary waveform generator, and a spectrum analyzer, and observe the effect of a subset of the Fourier series to create these waveforms.

BY APPLYING THEIR KNOWLEDGE OF FOURIER TRANSFORMS, STUDENTS CAN DESIGN:

- An Active Filter with Fourier Series Input: Extract the fundamental term of a Fourier series representation of a square wave using an active band-pass filter and then redesign the circuit to extract the second term of the same Fourier series.

15.1 Fourier Series

A periodic function is one that satisfies the relationship

$$f(t) = f(t + nT_0), \quad n = \pm 1, \pm 2, \pm 3, \ldots$$

for every value of t where T_0 is the period. As we have shown in previous chapters, the sinusoidal function is a very important periodic function. However, many other periodic functions have wide applications. For example, laboratory signal generators produce the pulse-train and square-wave signals shown in **Figs. 15.1a** and **b**, respectively, which are used for testing circuits. The oscilloscope is another laboratory instrument, and the sweep of its electron beam across the face of the cathode ray tube is controlled by a triangular signal of the form shown in **Fig. 15.1c**.

The techniques we will explore are based on the work of Jean Baptiste Joseph Fourier. Although our analyses will be confined to electric circuits, it is important to point out that the techniques are applicable to a wide range of engineering problems. In fact, it was Fourier's work in heat flow that led to the techniques that will be presented here.

In his work, Fourier demonstrated that a periodic function $f(t)$ could be expressed as a sum of sinusoidal functions. Therefore, given this fact and the fact that if a periodic function is expressed as a sum of linearly independent functions, each function in the sum must be periodic with the same period, and the function $f(t)$ can be expressed in the form

$$f(t) = a_0 + \sum_{n=1}^{\infty} D_n \cos(n\omega_0 t + \theta_n) \tag{15.1}$$

where $\omega_0 = 2\pi/T_0$ and a_0 is the average value of the waveform. An examination of this expression illustrates that all sinusoidal waveforms that are periodic with period T_0 have been included. For example, for $n = 1$, one cycle covers T_0 seconds, and $D_1 \cos(\omega_0 t + \theta_1)$ is called the *fundamental*. For $n = 2$, two cycles fall within T_0 seconds, and the term $D_2 \cos(2\omega_0 t + \theta_2)$ is called the *second harmonic*. In general, for $n = k$, k cycles fall within T_0 seconds, and $D_k \cos(k\omega_0 t + \theta_k)$ is the *kth harmonic term*.

Since the function $\cos(n\omega_0 t + \theta_k)$ can be written in exponential form using Euler's identity or as a sum of cosine and sine terms of the form $\cos n\omega_0 t$ and $\sin n\omega_0 t$ as demonstrated in Chapter 8, the series in Eq. (15.1) can be written as

$$f(t) = a_0 + \sum_{\substack{n=-\infty \\ n \neq 0}}^{\infty} \mathbf{c}_n e^{jn\omega_0 t} = \sum_{n=-\infty}^{\infty} \mathbf{c}_n e^{jn\omega_0 t} \tag{15.2}$$

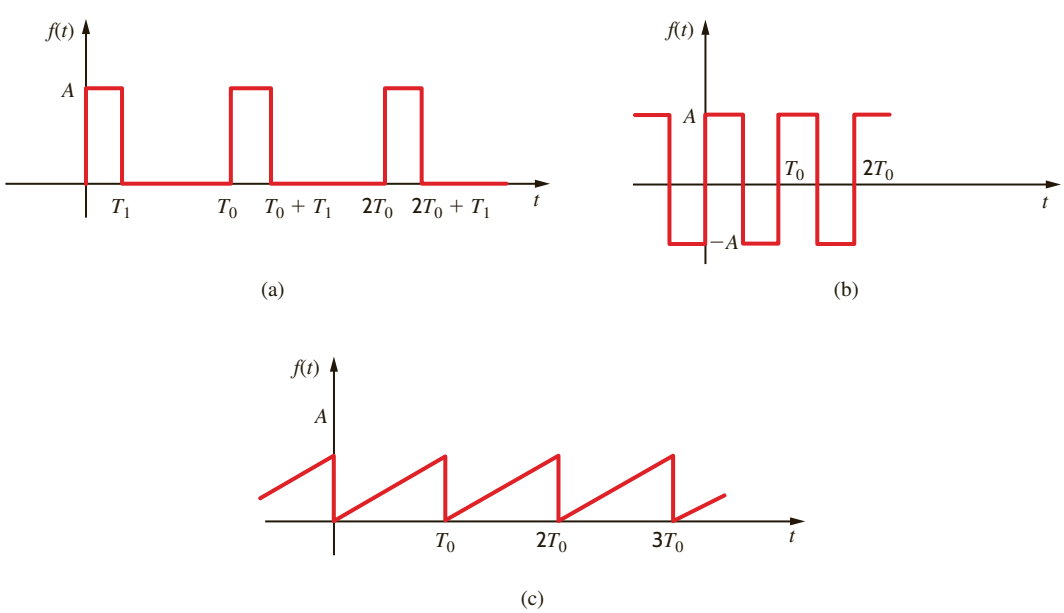

Figure 15.1
Some useful periodic signals.

Using the real-part relationship employed as a transformation between the time domain and the frequency domain, we can express $f(t)$ as

$$f(t) = a_0 + \sum_{n=1}^{\infty} \mathrm{Re}\left[(D_n \underline{/\theta_n}) e^{jn\omega_0 t} \right] \qquad \textbf{15.3}$$

$$= a_0 + \sum_{n=1}^{\infty} \mathrm{Re}(2\mathbf{c}_n e^{jn\omega_0 t}) \qquad \textbf{15.4}$$

$$= a_0 + \sum_{n=1}^{\infty} \mathrm{Re}\left[(a_n - jb_n) e^{jn\omega_0 t} \right] \qquad \textbf{15.5}$$

$$= a_0 + \sum_{n=1}^{\infty} (a_n \cos n\omega_0 t + b_n \sin n\omega_0 t) \qquad \textbf{15.6}$$

These equations allow us to write the Fourier series in a number of equivalent forms. Note that the *phasor* for the nth harmonic is

$$D_n \underline{/\theta_n} = 2\mathbf{c}_n = a_n - jb_n \qquad \textbf{15.7}$$

The approach we will take will be to represent a nonsinusoidal periodic input by a sum of complex exponential functions, which because of Euler's identity is equivalent to a sum of sines and cosines. We will then use (1) the superposition property of linear systems and (2) our knowledge that the steady-state response of a time-invariant linear system to a sinusoidal input of frequency ω_0 is a sinusoidal function of the same frequency to determine the response of such a system.

To illustrate the manner in which a nonsinusoidal periodic signal can be represented by a Fourier series, consider the periodic function shown in **Fig. 15.2a**. In **Figs. 15.2b–d** we can see the impact of using a specific number of terms in the series to represent the original function. Note that the series more closely represents the original function as we employ more and more terms.

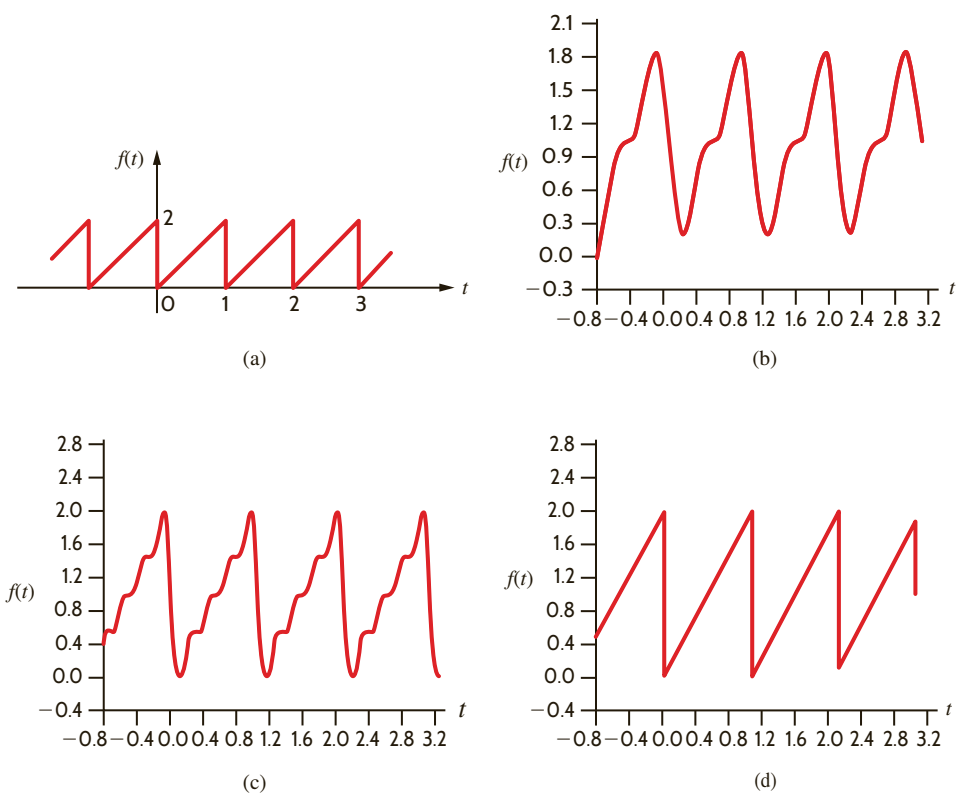

Figure 15.2
Periodic function (a) and its representation by a fixed number of Fourier series terms, (b) 2 terms, (c) 4 terms, (d) 100 terms.

EXPONENTIAL FOURIER SERIES *Any physically realizable periodic signal* may be represented over the interval $t_1 < t < t_1 + T_0$ by the *exponential Fourier series*

$$f(t) = \sum_{n=-\infty}^{\infty} \mathbf{c}_n e^{jn\omega_0 t} \tag{15.8}$$

where the $\mathbf{c}_n$ are the complex (phasor) Fourier coefficients. These coefficients are derived as follows. Multiplying both sides of Eq. (15.8) by $e^{-jk\omega_0 t}$ and integrating over the interval t_1 to $t_1 + T_0$, we obtain

$$\begin{aligned}\int_{t_1}^{t_1+T_0} f(t)e^{-jk\omega_0 t}\,dt &= \int_{t_1}^{t_1+T_0}\left(\sum_{n=-\infty}^{\infty} \mathbf{c}_n e^{jn\omega_0 t}\right)e^{-jk\omega_0 t}\,dt \\ &= \mathbf{c}_k T_0\end{aligned}$$

since

$$\int_{t_1}^{t_1+T_0} e^{j(n-k)\omega_0 t}\,dt = \begin{cases} 0 & \text{for } n \neq k \\ T_0 & \text{for } n = k \end{cases}$$

Therefore, the Fourier coefficients are defined by the equation

$$\mathbf{c}_n = \frac{1}{T_0}\int_{t_1}^{t_1+T_0} f(t)e^{-jn\omega_0 t}\,dt \tag{15.9}$$

The following example illustrates the manner in which we can represent a periodic signal by an exponential Fourier series.

EXAMPLE 15.1

We wish to determine the exponential Fourier series for the periodic voltage waveform shown in **Fig. 15.3**.

SOLUTION

The Fourier coefficients are determined using Eq. (15.9) by integrating over one complete period of the waveform,

$$\begin{aligned}\mathbf{c}_n &= \frac{1}{T}\int_{-T/2}^{T/2} f(t)e^{-jn\omega_0 t}\,dt \\ &= \frac{1}{T}\int_{-T/2}^{-T/4} -Ve^{-jn\omega_0 t}\,dt \\ &\quad + \int_{-T/4}^{T/4} Ve^{-jn\omega_0 t}\,dt + \int_{T/4}^{T/2} -Ve^{-jn\omega_0 t}\,dt \\ &= \frac{V}{jn\omega_0 T}\left[+e^{-jn\omega_0 t}\Big|_{-T/2}^{-T/4} - e^{-jn\omega_0 t}\Big|_{-T/4}^{T/4} + e^{-jn\omega_0 t}\Big|_{T/2}^{T/4}\right]\end{aligned}$$

Figure 15.3
Periodic voltage waveform.

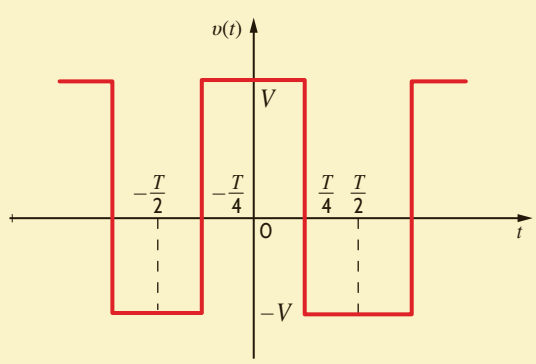

$$= \frac{V}{jn\omega_0 T}\left(2e^{jn\pi/2} - 2e^{-jn\pi/2} + e^{-jn\pi} - e^{+jn\pi}\right)$$

$$= \frac{V}{n\omega_0 T}\left[4 \sin\frac{n\pi}{2} - 2\sin(n\pi)\right]$$

$$= 0 \qquad \text{for } n \text{ even}$$

$$= \frac{2V}{n\pi}\sin\frac{n\pi}{2} \qquad \text{for } n \text{ odd}$$

$\mathbf{c}_0$ corresponds to the average value of the waveform. This term can be evaluated using the original equation for $\mathbf{c}_n$. Therefore,

$$c_0 = \frac{1}{T}\int_{-\frac{T}{2}}^{\frac{T}{2}} v(t)\,dt$$

$$= \frac{1}{T}\left[\int_{-\frac{T}{2}}^{-\frac{T}{4}} -V\,dt + \int_{-\frac{T}{4}}^{\frac{T}{4}} V\,dt + \int_{\frac{T}{4}}^{\frac{T}{2}} -V\,dt\right]$$

$$= \frac{1}{T}\left[-\frac{VT}{4} + \frac{VT}{2} - \frac{VT}{4}\right] = 0$$

Therefore,

$$v(t) = \sum_{\substack{n=-\infty \\ n\neq 0 \\ n\,\text{odd}}}^{\infty} \frac{2V}{n\pi}\sin\frac{n\pi}{2}\,e^{jn\omega_0 t}$$

This equation can be written as

$$v(t) = \sum_{\substack{n=1 \\ n\,\text{odd}}}^{\infty} \frac{2V}{n\pi}\sin\frac{n\pi}{2}\,e^{jn\omega_0 t} + \sum_{\substack{n=-1 \\ n\,\text{odd}}}^{-\infty} \frac{2V}{n\pi}\sin\frac{n\pi}{2}\,e^{jn\omega_0 t}$$

$$= \sum_{\substack{n=1 \\ n\,\text{odd}}}^{\infty} \left(\frac{2V}{n\pi}\sin\frac{n\pi}{2}\right)e^{jn\omega_0 t} + \left(\frac{2V}{n\pi}\sin\frac{n\pi}{2}\right)^{*} e^{-jn\omega_0 t}$$

Since a number plus its complex conjugate is equal to two times the real part of the number, $v(t)$ can be written as

$$v(t) = \sum_{\substack{n=1 \\ n\,\text{odd}}}^{\infty} 2\,\text{Re}\left(\frac{2V}{n\pi}\sin\frac{n\pi}{2}\,e^{jn\omega_0 t}\right)$$

or

$$v(t) = \sum_{\substack{n=1 \\ n\,\text{odd}}}^{\infty} \frac{4V}{n\pi}\sin\frac{n\pi}{2}\cos n\omega_0 t$$

Note that this same result could have been obtained by integrating over the interval $-T/4$ to $3T/4$.

LEARNING ASSESSMENTS

E15.1 Find the Fourier coefficients for the waveform in Fig. E15.1.

ANSWER:

$$\mathbf{c}_n = \frac{1 - e^{-jn\pi}}{j2\pi n};\ \mathbf{c}_0 = \frac{1}{2}.$$

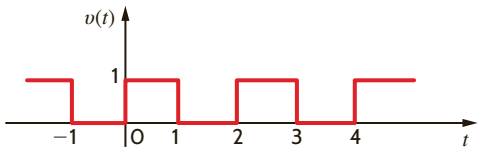

Figure E15.1

E15.2 Find the Fourier coefficients for the waveform in Fig. E15.2.

ANSWER:

$\mathbf{c}_n = \frac{2}{n\pi}\left(2\sin\frac{2\pi n}{3} - \sin\frac{n\pi}{3}\right)$; $\mathbf{c}_0 = 2$.

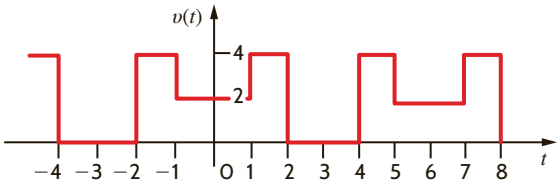

Figure E15.2

E15.3 Find the exponential Fourier series for the waveform shown in Fig. E15.3.

ANSWER:

$v(t) = \ldots + 0.225e^{j135^\circ}e^{-j1.5\pi t} + 0.159e^{j90^\circ}e^{-j\pi t} + 0.675e^{j45^\circ}e^{-j0.5\pi t} + 0.25 + 0.675e^{-j45^\circ}e^{j0.5\pi t} + 0.159e^{-j90^\circ}e^{j\pi t} + 0.225e^{-j135^\circ}e^{j1.5\pi t} + \ldots$ V.

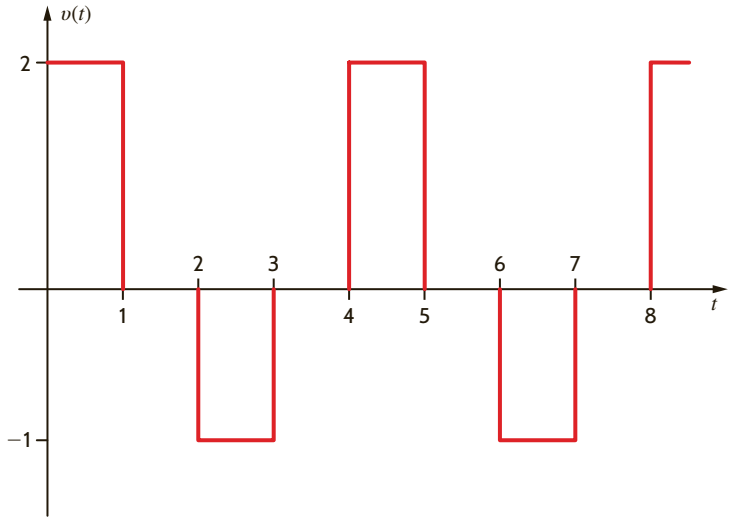

Figure E15.3

TRIGONOMETRIC FOURIER SERIES Let us now examine another form of the Fourier series. Since

$$2\mathbf{c}_n = a_n - jb_n \tag{15.10}$$

we will examine this quantity $2\mathbf{c}_n$ and separate it into its real and imaginary parts. Using Eq. (15.9), we find that

$$2\mathbf{c}_n = \frac{2}{T_0}\int_{t_1}^{t_1+T_0} f(t)e^{-jn\omega_0 t}\,dt \tag{15.11}$$

Using Euler's identity, we can write this equation in the form

$$\begin{aligned} 2\mathbf{c}_n &= \frac{2}{T_0}\int_{t_1}^{t_1+T_0} f(t)\left(\cos n\omega_0 t - j\sin n\omega_0 t\right)dt \\ &= \frac{2}{T_0}\int_{t_1}^{t_1+T_0} f(t)\cos n\omega_0 t\,dt - j\frac{2}{T_0}\int_{t_1}^{t_1+T_0} f(t)\sin n\omega_0 t\,dt \end{aligned}$$

From Eq. (15.10) we note then that

$$a_n = \frac{2}{T_0}\int_{t_1}^{t_1+T_0} f(t)\cos n\omega_0 t\,dt \tag{15.12}$$

$$b_n = \frac{2}{T_0}\int_{t_1}^{t_1+T_0} f(t)\sin n\omega_0 t\,dt \tag{15.13}$$

These are the coefficients of the Fourier series described by Eq. (15.6), which we call the *trigonometric Fourier series*. These equations are derived directly in most textbooks using

the orthogonality properties of the cosine and sine functions. Note that we can now evaluate $\mathbf{c}_n$, a_n, b_n, and since

$$2\mathbf{c}_n = D_n\underline{/\theta_n} \tag{15.14}$$

we can derive the coefficients for the *cosine Fourier series* described by Eq. (15.1). This form of the Fourier series is particularly useful because it allows us to represent each harmonic of the function as a phasor.

From Eq. (15.9) we note that $\mathbf{c}_0$, which is written as a_0, is

$$a_0 = \frac{1}{T}\int_{t_1}^{t_1+T_0} f(t)\,dt \tag{15.15}$$

This is the average value of the signal $f(t)$ and can often be evaluated directly from the waveform.

SYMMETRY AND THE TRIGONOMETRIC FOURIER SERIES If a signal exhibits certain symmetrical properties, we can take advantage of these properties to simplify the calculations of the Fourier coefficients. There are three types of symmetry: (1) even-function symmetry, (2) odd-function symmetry, and (3) half-wave symmetry.

Even-Function Symmetry A function is said to be even if

$$f(t) = f(-t) \tag{15.16}$$

An even function is symmetrical about the vertical axis, and a notable example is the function $\cos n\omega_0 t$. Note that the waveform in Fig. 15.3 also exhibits even-function symmetry. Let us now determine the expressions for the Fourier coefficients if the function satisfies Eq. (15.16).

If we let $t_1 = -T_0/2$ in Eq. (15.15), we obtain

$$a_0 = \frac{1}{T_0}\int_{-T_0/2}^{T_0/2} f(t)\,dt$$

which can be written as

$$a_0 = \frac{1}{T_0}\int_{-T_0/2}^{0} f(t)\,dt + \frac{1}{T_0}\int_{0}^{T_0/2} f(t)\,dt$$

If we now change the variable on the first integral (i.e., let $t = -x$), then $f(-x) = f(x)$, $dt = -dx$, and the range of integration is from $x = T_0/2$ to 0. Therefore, the preceding equation becomes

$$\begin{aligned} a_0 &= \frac{1}{T_0}\int_{T_0/2}^{0} f(x)(-dx) + \frac{1}{T_0}\int_{0}^{T_0/2} f(t)\,dt \\ &= \frac{1}{T_0}\int_{0}^{T_0/2} f(x)\,dx + \frac{1}{T_0}\int_{0}^{T_0/2} f(t)\,dt \\ &= \frac{2}{T_0}\int_{0}^{T_0/2} f(t)\,dt \end{aligned} \tag{15.17}$$

The other Fourier coefficients are derived in a similar manner. The a_n coefficient can be written

$$a_n = \frac{2}{T_0}\int_{-T_0/2}^{0} f(t)\cos n\omega_0 t\,dt + \frac{2}{T_0}\int_{0}^{T_0/2} f(t)\cos n\omega_0 t\,dt$$

Employing the change of variable that led to Eq. (15.17), we can express the preceding equation as

$$\begin{aligned} a_n &= \frac{2}{T_0}\int_{T_0/2}^{0} f(x)\cos(-n\omega_0 x)(-dx) + \frac{2}{T_0}\int_{0}^{T_0/2} f(t)\cos n\omega_0 t\,dt \\ &= \frac{2}{T_0}\int_{0}^{T_0/2} f(x)\cos n\omega_0 x\,dx + \frac{2}{T_0}\int_{0}^{T_0/2} f(t)\cos n\omega_0 t\,dt \end{aligned}$$

$$a_n = \frac{4}{T_0}\int_0^{T_0/2} f(t)\cos n\omega_0 t\,dt \qquad \textbf{15.18}$$

Once again, following the preceding development, we can write the equation for the b_n coefficient as

$$b_n = \frac{2}{T_0}\int_{-T_0/2}^{0} f(t)\sin n\omega_0 t\,dt + \int_0^{T_0/2} f(t)\sin n\omega_0 t\,dt$$

The variable change employed previously yields

$$b_n = \frac{2}{T_0}\int_{T_0/2}^{0} f(x)\sin(-n\omega_0 x)(-dx) + \frac{2}{T_0}\int_0^{T_0/2} f(t)\sin n\omega_0 t\,dt$$

$$= \frac{-2}{T_0}\int_0^{T_0/2} f(x)\sin n\omega_0 x\,dx + \frac{2}{T_0}\int_0^{T_0/2} f(t)\sin n\omega_0 t\,dt$$

$$b_n = 0 \qquad \textbf{15.19}$$

The preceding analysis indicates that the Fourier series for an even periodic function consists only of a constant term and cosine terms. Therefore, if $f(t)$ is even, $b_n = 0$ and from Eqs. (15.10) and (15.14), $\mathbf{c}_n$ are real and θ_n are multiples of 180°.

Odd-Function Symmetry A function is said to be odd if

$$f(t) = -f(-t) \qquad \textbf{15.20}$$

An example of an odd function is $\sin n\omega_0 t$. Another example is the waveform in **Fig. 15.4a**. Following the mathematical development that led to Eqs. (15.17) to (15.19), we can show that for an odd function the Fourier coefficients are

$$a_0 = 0 \qquad \textbf{15.21}$$

$$a_n = 0 \qquad \text{for all } n > 0 \qquad \textbf{15.22}$$

$$b_n = \frac{4}{T_0}\int_0^{T_0/2} f(t)\sin n\omega_0 t\,dt \qquad \textbf{15.23}$$

Figure 15.4

Three waveforms; (a) and (c) possess half-wave symmetry.

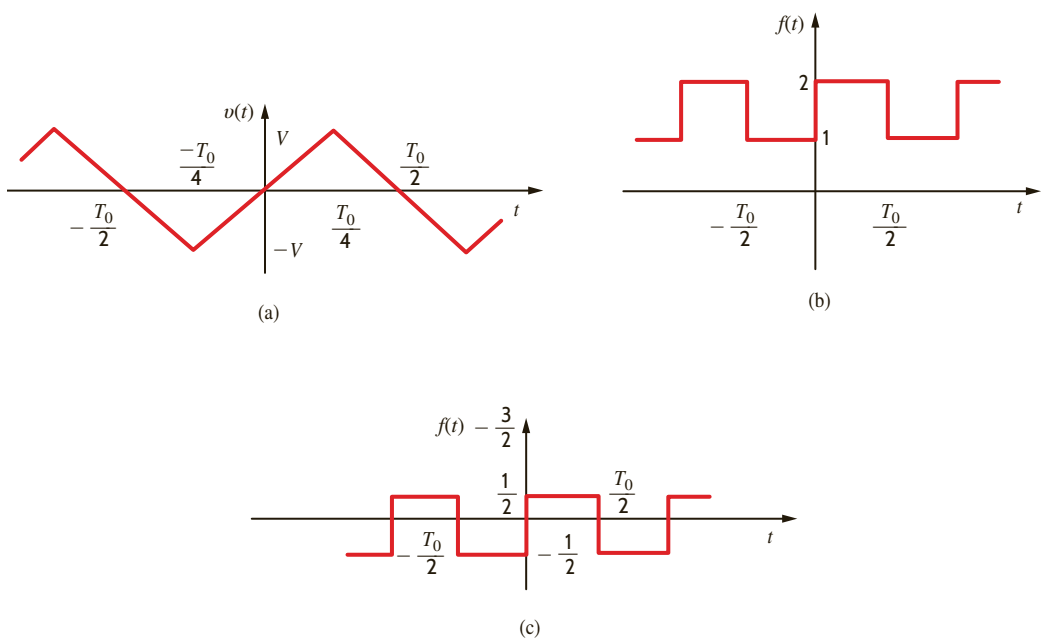

Therefore, if $f(t)$ is odd, $a_n = 0$ and, from Eqs. (15.10) and (15.14), $\mathbf{c}_n$ are pure imaginary and θ_n are odd multiples of 90°.

Half-Wave Symmetry A function is said to possess *half-wave symmetry* if

$$f(t) = -f\left(t - \frac{T_0}{2}\right) \tag{15.24}$$

Basically, this equation states that each half-cycle is an inverted version of the adjacent half-cycle; that is, if the waveform from $-T_0/2$ to 0 is inverted, it is identical to the waveform from 0 to $T_0/2$. The waveforms shown in **Figs. 15.4a** and **c** possess half-wave symmetry.

Once again we can derive the expressions for the Fourier coefficients, in this case by repeating the mathematical development that led to the equations for even-function symmetry using the change of variable $t = x + T_0/2$ and Eq. (15.24). The results of this development are the following equations:

$$a_0 = 0 \tag{15.25}$$

$$a_n = b_n = 0 \qquad \text{for } n \text{ even} \tag{15.26}$$

$$a_n = \frac{4}{T_0}\int_0^{T_0/2} f(t)\cos n\omega_0 t\, dt \qquad \text{for } n \text{ odd} \tag{15.27}$$

$$b_n = \frac{4}{T_0}\int_0^{T_0/2} f(t)\sin n\omega_0 t\, dt \qquad \text{for } n \text{ odd} \tag{15.28}$$

The following equations are often useful in the evaluation of the trigonometric Fourier series coefficients:

$$\begin{aligned}
\int \sin ax\, dx &= -\frac{1}{a}\cos ax \\
\int \cos ax\, dx &= \frac{1}{a}\sin ax \\
\int x\sin ax\, dx &= \frac{1}{a^2}\sin ax - \frac{1}{a}x\cos ax \\
\int x\cos ax\, dx &= \frac{1}{a^2}\cos ax + \frac{1}{a}x\sin ax
\end{aligned} \tag{15.29}$$

EXAMPLE 15.2

We wish to find the trigonometric Fourier series for the periodic signal in Fig. 15.3.

SOLUTION

The waveform exhibits even-function symmetry and therefore

$$a_0 = 0$$
$$b_n = 0 \qquad \text{for all } n$$

The waveform exhibits half-wave symmetry and therefore

$$a_n = 0 \qquad \text{for } n \text{ even}$$

Hence,

$$\begin{aligned}
a_n &= \frac{4}{T_0}\int_0^{T/2} f(t)\cos n\omega_0 t\, dt \qquad \text{for } n \text{ odd} \\
&= \frac{4}{T}\left(\int_0^{T/4} V\cos n\omega_0 t\, dt - \int_{T/4}^{T/2} V\cos n\omega_0 t\, dt\right) \\
&= \frac{4V}{n\omega_0 T}\left(\sin n\omega_0 t\Big|_0^{T/4} - \sin n\omega_0 t\Big|_{T/4}^{T/2}\right)
\end{aligned}$$

$$= \frac{4V}{n\omega_0 T}\left(\sin\frac{n\pi}{2} - \sin n\pi + \sin\frac{n\pi}{2}\right)$$

$$= \frac{8V}{n2\pi}\sin\frac{n\pi}{2} \qquad \text{for } n \text{ odd}$$

$$= \frac{4V}{n\pi}\sin\frac{n\pi}{2} \qquad \text{for } n \text{ odd}$$

The reader should compare this result with that obtained in Example 15.1.

EXAMPLE 15.3

Let us determine the trigonometric Fourier series expansion for the waveform shown in Fig. 15.4a.

SOLUTION

The function not only exhibits odd-function symmetry, but it possesses half-wave symmetry as well. Therefore, it is necessary to determine only the coefficients b_n for n odd. Note that

$$v(t) = \begin{cases} \dfrac{4Vt}{T_0} & 0 \le t \le T_0/4 \\ 2V - \dfrac{4Vt}{T_0} & T_0/4 < t \le T_0/2 \end{cases}$$

The b_n coefficients are then

$$b_n = \frac{4}{T_0}\int_0^{T_0/4} \frac{4Vt}{T_0}\sin n\omega_0 t\, dt + \frac{4}{T_0}\int_{T_0/4}^{T_0/2}\left(2V - \frac{4Vt}{T_0}\right)\sin n\omega_0 t\, dt$$

The evaluation of these integrals is tedious but straightforward and yields

$$b_n = \frac{8V}{n^2\pi^2}\sin\frac{n\pi}{2} \qquad \text{for } n \text{ odd}$$

Hence, the Fourier series expansion is

$$v(t) = \sum_{\substack{n=1 \\ n\,\text{odd}}}^{\infty} \frac{8V}{n^2\pi^2}\sin\frac{n\pi}{2}\sin n\omega_0 t$$

EXAMPLE 15.4

We wish to find the trigonometric Fourier series expansion of the waveform in **Fig. 15.4b**.

SOLUTION

Note that this waveform has an average value of 3/2. Therefore, instead of determining the Fourier series expansion of $f(t)$, we will determine the Fourier series for $f(t) - 3/2$, which is the waveform shown in Fig. 15.4c. The latter waveform possesses half-wave symmetry. The function is also odd and therefore

$$b_n = \frac{4}{T_0}\int_0^{T_0/2} \frac{1}{2}\sin n\omega_0 t\, dt$$

$$= \frac{2}{T_0}\left(\frac{-1}{n\omega_0}\cos n\omega_0 t\Big|_0^{T_0/2}\right)$$

$$= \frac{-2}{n\omega_0 T_0}(\cos n\pi - 1)$$

$$= \frac{2}{n\pi} \qquad \text{for } n \text{ odd}$$

Therefore, the Fourier series expansion for $f(t) - 3/2$ is

$$f(t) - \frac{3}{2} = \sum_{\substack{n=1 \\ n\,\text{odd}}}^{\infty} \frac{2}{n\pi} \sin n\omega_0 t$$

or

$$f(t) = \frac{3}{2} + \sum_{\substack{n=1 \\ n\,\text{odd}}}^{\infty} \frac{2}{n\pi} \sin n\omega_0 t$$

EXAMPLE 15.5

Electrical sources such as batteries, solar panels, and fuel cells produce a dc output voltage. An electrical load requiring an ac voltage can be powered from a dc source using a device called an inverter, which converts a dc voltage to an ac voltage. Inverters can produce single-phase or three-phase ac voltages. Single-phase inverters are often classified as pure or true sine wave inverters or modified sine wave inverters. The output from a pure sine wave inverter is shown in **Fig. 15.5**. This waveform was discussed in Chapter 8 and could be described by $v(t) = 170 \sin 377t$ volts. **Fig. 15.6** is the output voltage from a modified sine wave inverter. Note that this waveform is more square wave than sine wave.

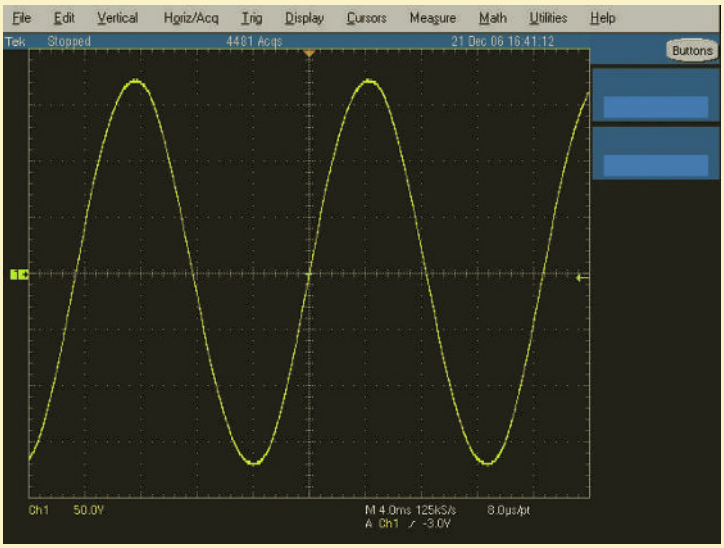

Figure 15.5
Output voltage for a pure sine wave inverter.

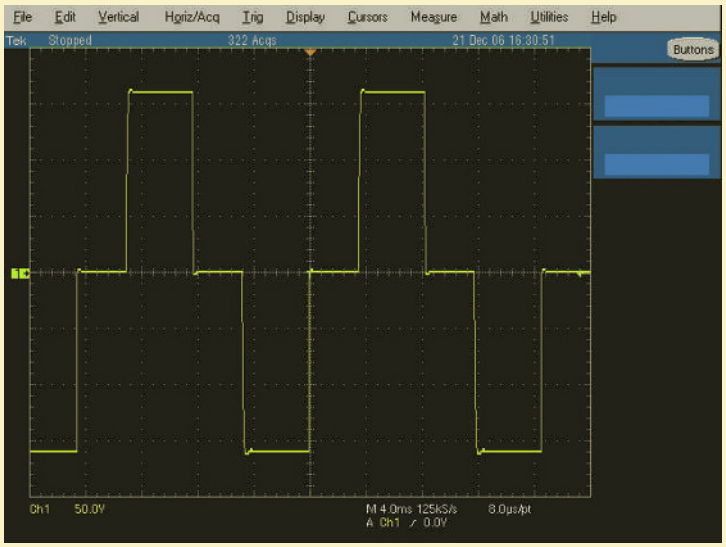

Figure 15.6
Output voltage for a modified sine wave inverter.

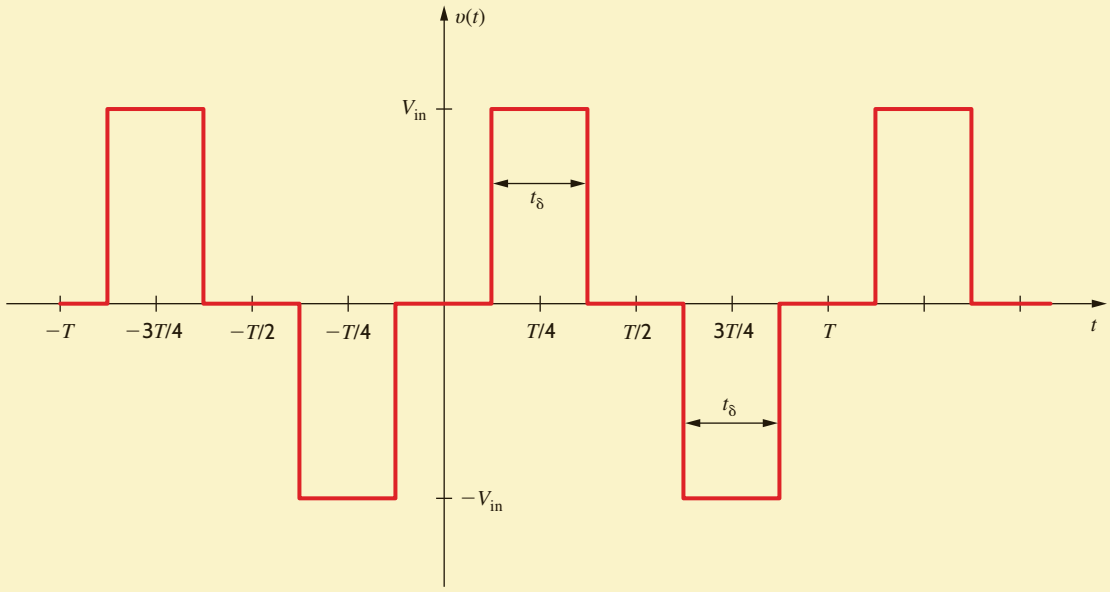

Figure 15.7

Waveform for determining Fourier components of the modified sine wave inverter output voltage.

Let's determine the Fourier components of the modified sine wave inverter output voltage using the waveform in **Fig. 15.7**. Note that this waveform consists of one positive pulse of width t_δ centered about $T/4$ and a negative pulse of the same width centered about $3T/4$. Close examination of this waveform reveals that it is an odd function with half-wave symmetry. Therefore,

$$a_0 = 0$$
$$a_n = 0 \text{ for all } n$$
$$b_n = 0 \text{ for } n \text{ even}$$

We can find b_n for n odd using

$$b_n = \frac{4}{T_0}\int_0^{T_0/2} f(t)\sin n\omega_0 t\,dt$$

The waveform has a value of V_{in} between $t = T/4 - \delta/2$ and $t = T/4 + \delta/2$ and zero elsewhere over the interval from 0 to $T/2$. Therefore,

$$b_n = \frac{4}{T}\int_{T/4 - t_\delta/2}^{T/4 + t_\delta/2} V_{in}\sin n\omega_0 t\,dt$$

$$b_n = \frac{4V_{in}}{T}\int_{T/4 - t_\delta/2}^{T/4 + t_\delta/2} \sin n\omega_0 t\,dt$$

Integrating yields

$$b_n = \frac{4V_{in}}{n\omega_0 T}\Big[-\cos n\omega_0 t\Big]_{T/4 - t_\delta/2}^{T/4 + t_\delta/2}$$

Recalling that $\omega_0 T = 2\pi$ and evaluating the function at the limits produces

$$b_n = \frac{2V_{in}}{\pi}\left[-\cos\left(\frac{n\omega_0 T}{4} + \frac{n\omega_0 t_\delta}{2}\right) + \cos\left(\frac{n\omega_0 T}{4} - \frac{n\omega_0 t_\delta}{2}\right)\right]$$

The expression in brackets is $-\cos(\alpha + \beta) + \cos(\alpha - \beta)$. Using the appropriate trigonometric identities, we have

$$-\cos(\alpha + \beta) + \cos(\alpha - \beta) = -\cos\alpha\cos\beta + \sin\alpha\sin\beta + \cos\alpha\cos\beta + \sin\alpha\sin\beta$$
$$-\cos(\alpha + \beta) + \cos(\alpha - \beta) = 2\sin\alpha\sin\beta$$

The expression for b_n, which is valid for n odd, becomes

$$b_n = \frac{4V_{in}}{n\pi}\left[\sin\left(\frac{n\omega_0 T}{4}\right)\sin\left(\frac{n\omega_0 t_\delta}{2}\right)\right]$$

Let's define $\omega_0 t_\delta = \delta$ and again utilize $\omega_0 T = 2\pi$:

$$b_n = \frac{4V_{in}}{n\pi}\left[\sin\left(\frac{n\pi}{2}\right)\sin\left(\frac{n\delta}{2}\right)\right]$$

Using this expression,

$$b_1 = \frac{4V_{in}}{\pi}\sin\left(\frac{\pi}{2}\right)\sin\left(\frac{\delta}{2}\right) = \frac{4V_{in}}{\pi}\sin\left(\frac{\delta}{2}\right)$$
$$b_3 = \frac{4V_{in}}{3\pi}\sin\left(\frac{3\pi}{2}\right)\sin\left(\frac{3\delta}{2}\right) = -\frac{4V_{in}}{3\pi}\sin\left(\frac{3\delta}{2}\right)$$
$$b_5 = \frac{4V_{in}}{5\pi}\sin\left(\frac{5\pi}{2}\right)\sin\left(\frac{5\delta}{2}\right) = \frac{4V_{in}}{5\pi}\sin\left(\frac{5\delta}{2}\right)$$

Now let's plot the absolute value of b_1, b_3, and b_5 as δ varies between 0º and 180º for $V_{in} = 1$ volt as shown in **Fig. 15.8**. Note that b_1—the coefficient of the first harmonic or fundamental—is zero for $\delta = 0°$ and reaches a maximum value of $4/\pi = 1.273$ volts for $\delta = 180°$. Examination of this plot reveals that the absolute value of the third harmonic is zero for $\delta = 120°$. The expression for b_3 contains the term $\sin(3\delta/2)$, which has a value of zero for $\delta = 120°$. If we chose $\delta = 72°$, the amplitude of the fifth harmonic would be zero. This example illustrates that it is possible to eliminate one harmonic from the Fourier series for the output voltage by proper selection of the angle δ.

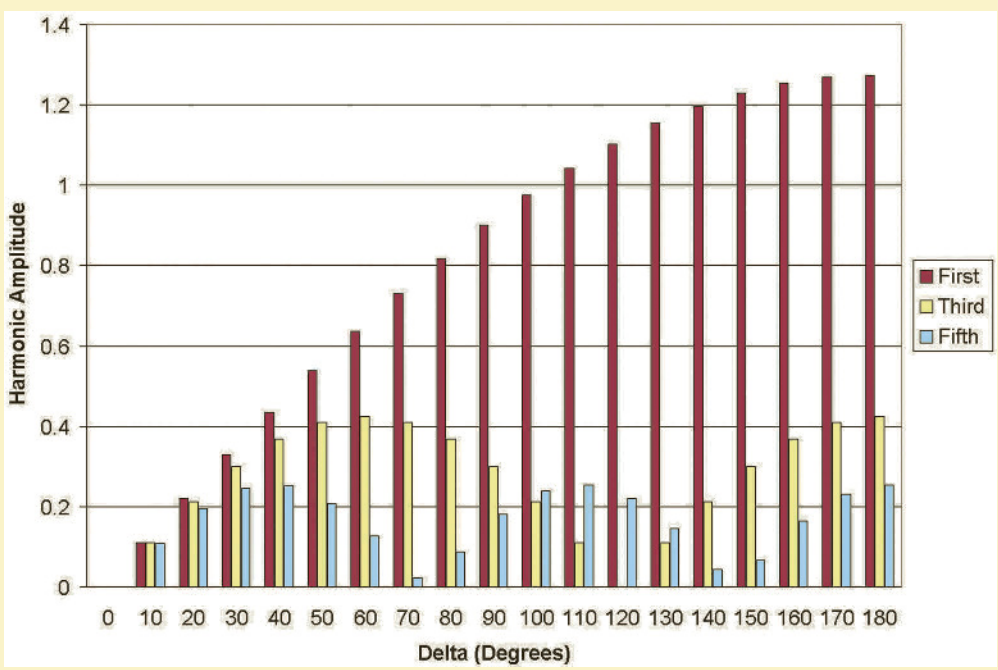

Figure 15.8
Plot of harmonic amplitude versus the angle δ.

LEARNING ASSESSMENTS

E15.4 Determine the type of symmetry exhibited by the waveform in Figs. E15.2 and E15.4.

ANSWER:
Fig. E15.2, even symmetry;
Fig. E15.4, half-wave symmetry.

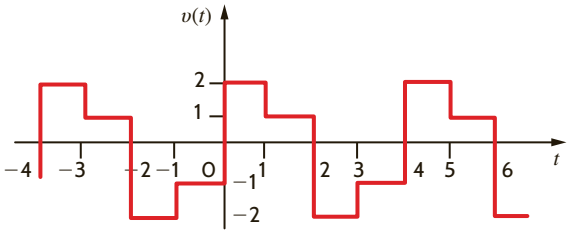

Figure E15.4

E15.5 Find the trigonometric Fourier series for the voltage waveform in Fig. E15.2.

ANSWER:

$$v(t) = 2 + \sum_{n=1}^{\infty} \frac{4}{n\pi}\left(2\sin\frac{2\pi n}{3} - \sin\frac{n\pi}{3}\right)\cos\frac{n\pi}{3}t.$$

E15.6 Find the trigonometric Fourier series for the voltage waveform in Fig. E15.4.

ANSWER:

$$v(t) = \sum_{\substack{n=1\\ n\,\text{odd}}}^{\infty} \frac{2}{n\pi}\sin\frac{n\pi}{2}\cos\frac{n\pi}{2}t + \frac{2}{n\pi}(2 - \cos n\pi)\sin\frac{n\pi}{2}t.$$

E15.7 Determine the trigonometric Fourier series for the waveform shown in Fig. E15.3.

ANSWER:

$v(t) = 0.25 + 0.955\cos(0.5\pi t) + 0.955\sin(0.5\pi t) + 0.318\sin(\pi t) - 0.318\cos(1.5\pi t) + 0.318\sin(1.5\pi t) + \ldots$ V.

TIME-SHIFTING Let us now examine the effect of time-shifting a periodic waveform $f(t)$ defined by the equation

$$f(t) = \sum_{n=-\infty}^{\infty} \mathbf{c}_n e^{jn\omega_0 t}$$

Note that

$$f(t - t_0) = \sum_{n=-\infty}^{\infty} \mathbf{c}_n e^{jn\omega_0(t - t_0)}$$

$$f(t - t_0) = \sum_{n=-\infty}^{\infty} \left(\mathbf{c}_n e^{-jn\omega_0 t_0}\right) e^{jn\omega_0 t} \qquad \textbf{15.30}$$

Since $e^{-jn\omega_0 t_0}$ corresponds to a phase shift, the Fourier coefficients of the time-shifted function are the Fourier coefficients of the original function, with the angle shifted by an amount directly proportional to frequency. Therefore, time shift in the time domain corresponds to phase shift in the frequency domain.

EXAMPLE 15.6

Let us time-delay the waveform in Fig. 15.3 by a quarter period and compute the Fourier series.

SOLUTION

The waveform in Fig. 15.3 time-delayed by $T_0/4$ is shown in Fig. 15.9. Since the time delay is $T_0/4$,

$$n\omega_0 t_d = n\frac{2\pi}{T_0}\frac{T_0}{4} = n\frac{\pi}{2} = n90°$$

Therefore, using Eq. (15.30) and the results of Example 15.1, the Fourier coefficients for the time-shifted waveform are

$$\mathbf{c}_n = \frac{2V}{n\pi}\sin\frac{n\pi}{2}\underline{/-n90^\circ} \qquad n\,\text{odd}$$

and therefore,

$$v(t) = \sum_{\substack{n=1\\ n\,\text{odd}}}^{\infty} \frac{4V}{n\pi}\sin\frac{n\pi}{2}\cos(n\omega_0 t - n90^\circ)$$

If we compute the Fourier coefficients for the time-shifted waveform in Fig. 15.9, we obtain

$$\begin{aligned}\mathbf{c}_n &= \frac{1}{T_0}\int_{-T_0/2}^{T_0/2} f(t)e^{-jn\omega_0 t}\,dt\\ &= \frac{1}{T_0}\int_{-T_0/2}^{0} -Ve^{-jn\omega_0 t}\,dt + \frac{1}{T_0}\int_{0}^{T_0/2} Ve^{-jn\omega_0 t}\,dt\\ &= \frac{2V}{jn\pi} \qquad \text{for } n\,\text{odd}\end{aligned}$$

Therefore,

$$\mathbf{c}_n = \frac{2V}{n\pi}\underline{/-90^\circ} \qquad n\,\text{odd}$$

Since n is odd, we can show that this expression is equivalent to the one obtained earlier.

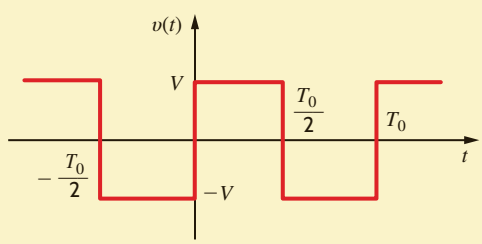

Figure 15.9
Waveform in Fig. 15.3 time-shifted by $T_0/4$.

In general, we can compute the phase shift in degrees using the expression

$$\text{phase shift(deg)} = \omega_0 t_d = (360^\circ)\frac{t_d}{T_0} \qquad \textbf{15.31}$$

so that a time shift of one-quarter period corresponds to a 90° phase shift.

As another interesting facet of the time shift, consider a function $f_1(t)$ that is nonzero in the interval $0 \le t \le T_0/2$ and is zero in the interval $T_0/2 < t \le T_0$. For purposes of illustration, let us assume that $f_1(t)$ is the triangular waveform shown in **Fig. 15.10a**. $f_1(t - T_0/2)$ is then shown in **Fig. 15.10b**. Then the function $f(t)$ defined as

$$f(t) = f_1(t) - f_1\left(t - \frac{T_0}{2}\right) \qquad \textbf{15.32}$$

is shown in **Fig. 15.10c**. Note that $f(t)$ has half-wave symmetry. In addition, note that if

$$f_1(t) = \sum_{n=-\infty}^{\infty} \mathbf{c}_n e^{-jn\omega_0 t}$$

then

$$\begin{aligned}f(t) = f_1(t) - f_1\left(t - \frac{T_0}{2}\right) &= \sum_{n=-\infty}^{\infty} \mathbf{c}_n(1 - e^{-jn\pi})e^{jn\omega_0 t}\\ &= \begin{cases}\displaystyle\sum_{n=-\infty}^{\infty} 2\mathbf{c}_n e^{jn\omega_0 t} & n\,\text{odd}\\ 0 & n\,\text{even}\end{cases}\end{aligned} \qquad \textbf{15.33}$$

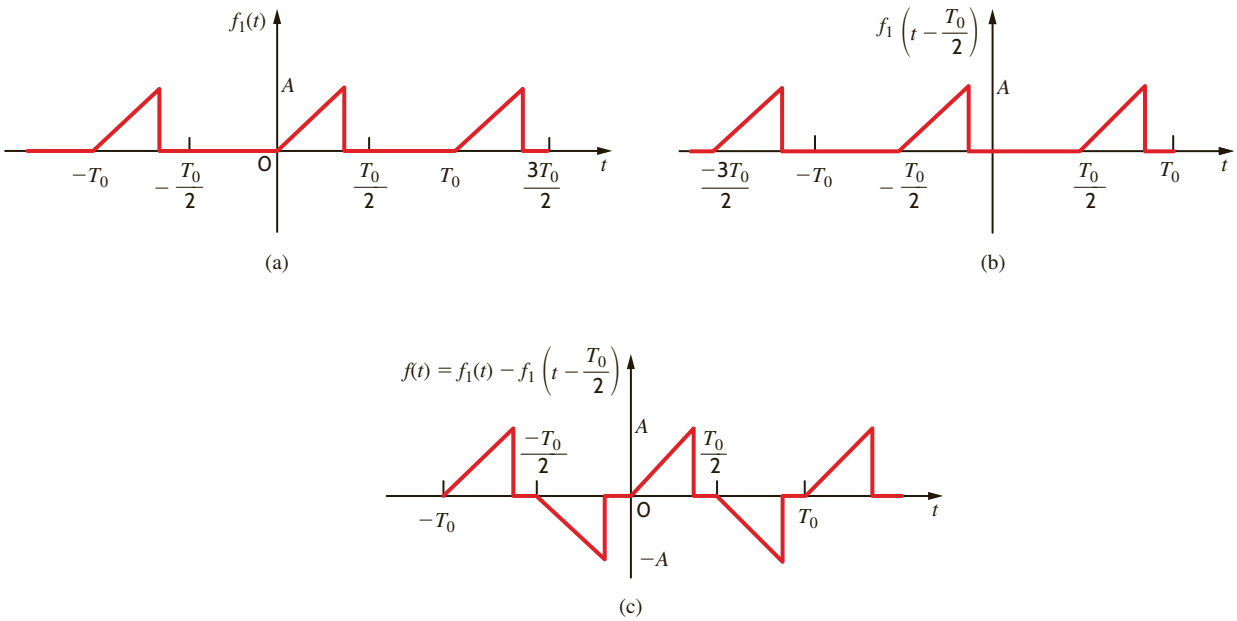

Figure 15.10

Waveforms that illustrate the generation of half-wave symmetry.

Therefore, we see that any function with half-wave symmetry can be expressed in the form of Eq. (15.32), where the Fourier series is defined by Eq. (15.33), and $\mathbf{c}_n$ is the Fourier coefficient for $f_1(t)$.

LEARNING ASSESSMENT

E15.8 If the waveform in Fig. E15.1 is time-delayed 1 s, we obtain the waveform in Fig. E15.8. Compute the exponential Fourier coefficients for the waveform in Fig. E15.8 and show that they differ from the coefficients for the waveform in Fig. E15.1 by an angle $n(180°)$.

ANSWER:

$\mathbf{c}_0 = \frac{1}{2}$; $\mathbf{c}_n = -\left(\frac{1 - e^{-jn\pi}}{j2\pi n}\right)$.

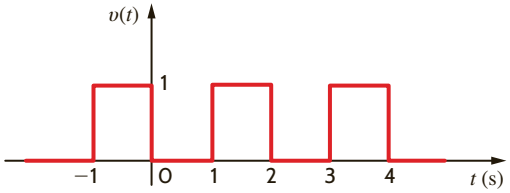

Figure E15.8

WAVEFORM GENERATION The magnitude of the harmonics in a Fourier series is independent of the time scale for a given waveshape. Therefore, the equations for a variety of waveforms can be given in tabular form without expressing a specific time scale. Table 15.1 is a set of commonly occurring periodic waves where the advantage of symmetry has been used to simplify the coefficients. These waveforms can be used to generate other waveforms. The level of a wave can be adjusted by changing the average value component; the time can be shifted by adjusting the angle of the harmonics; and two waveforms can be added to produce a third waveform. For example, the waveforms in **Figs. 15.11a** and **b** can be added to produce the waveform in **Fig. 15.11c**.

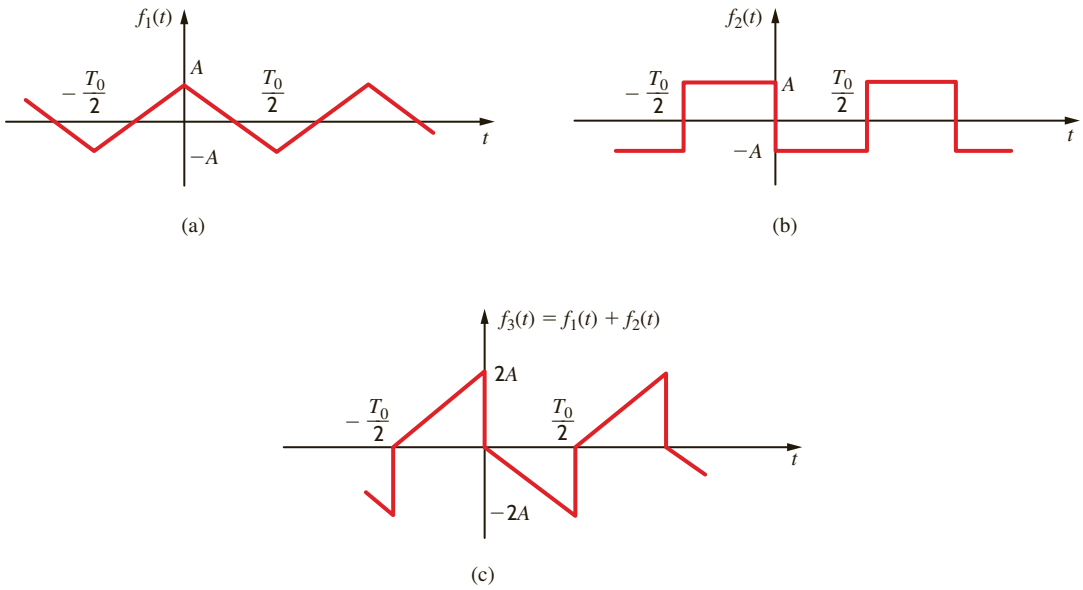

Figure 15.11
Example of waveform generation.

TABLE 15.1 Fourier series for some common waveforms

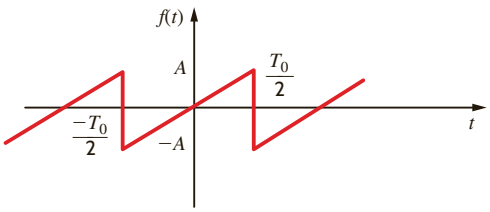

$$f(t) = \sum_{n=1}^{\infty} (-1)^{n+1} \frac{2A}{n\pi} \sin n\omega_0 t$$

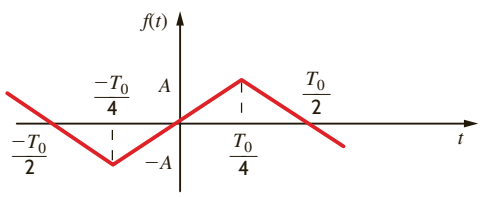

$$f(t) = \sum_{\substack{n=1 \\ n\,\text{odd}}}^{\infty} \frac{8A}{n^2\pi^2} \sin\frac{n\pi}{2} \sin n\omega_0 t$$

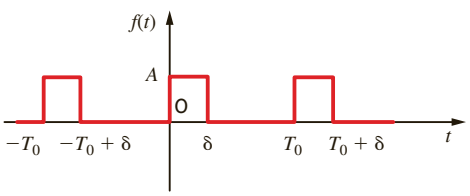

$$f(t) = \sum_{n=-\infty}^{\infty} \frac{A}{n\pi} \sin\frac{n\pi\delta}{T_0} e^{jn\omega_0[t-(\delta/2)]}$$

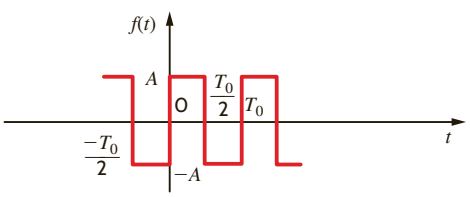

$$f(t) = \sum_{\substack{n=1 \\ n\,\text{odd}}}^{\infty} \frac{4A}{n\pi} \sin n\omega_0 t$$

(*Continues on the next page*)

TABLE 15.1 (*Continued*)

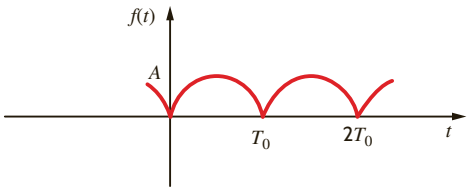

$$f(t) = \frac{2A}{\pi} + \sum_{n=1}^{\infty} \frac{4A}{\pi(1 - 4n^2)} \cos n\omega_0 t$$

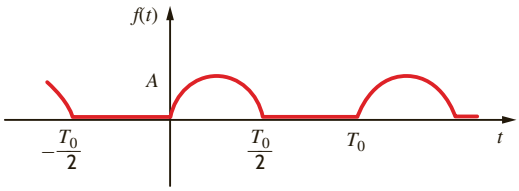

$$f(t) = \frac{A}{\pi} + \frac{A}{2} \sin \omega_0 t + \sum_{\substack{n=2 \\ n\text{even}}}^{\infty} \frac{2A}{\pi(1 - n^2)} \cos n\omega_0 t$$

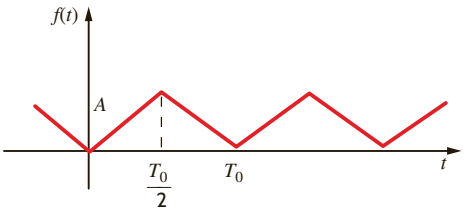

$$f(t) = \frac{A}{2} + \sum_{\substack{n=-\infty \\ n\neq 0 \\ n\text{odd}}}^{\infty} \frac{-2A}{n^2\pi^2} e^{jn\omega_0 t}$$

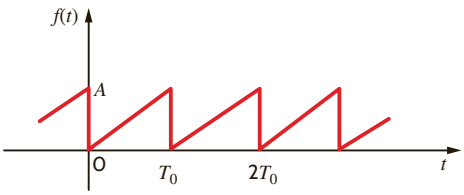

$$f(t) = \frac{A}{2} + \sum_{n=1}^{\infty} \frac{-A}{n\pi} \sin n\omega_0 t$$

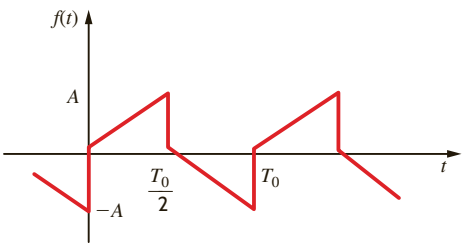

$$f(t) = \sum_{n=1}^{\infty} \frac{-4A}{\pi^2 n^2} \cos n\omega_0 t + \frac{2A}{\pi n} \sin n\omega_0 t$$

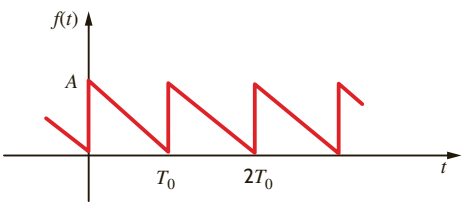

$$f(t) = \frac{A}{2} + \sum_{n=1}^{\infty} \frac{A}{\pi n} \sin n\omega_0 t$$

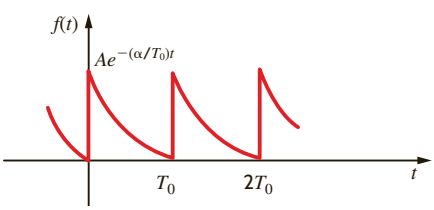

$$f(t) = \sum_{n=-\infty}^{\infty} \frac{A(1 - e^{-\alpha})}{\alpha + j2\pi n} e^{jn\omega_0 t}$$

LEARNING ASSESSMENT

E15.9 Two periodic waveforms are shown in Fig. E15.9. Compute the exponential Fourier series for each waveform, and then add the results to obtain the Fourier series for the waveform in Fig. E15.2.

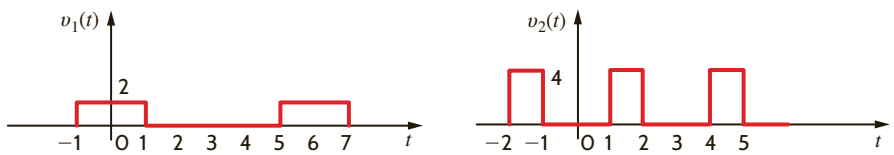

Figure E15.9

ANSWER:

$$v_1(t) = \frac{2}{3} + \sum_{\substack{n=-\infty \\ n \neq 0}}^{\infty} \frac{2}{n\pi} \sin\frac{n\pi}{3} e^{jn\omega_0 t};$$

$$v_2(t) = \frac{4}{3} + \sum_{n=-\infty}^{\infty} -\frac{4}{n\pi} \left(\sin\frac{n\pi}{3} - \sin\frac{2n\pi}{3}\right) e^{jn\omega_0 t}.$$

FREQUENCY SPECTRUM The *frequency spectrum* of the function $f(t)$ expressed as a Fourier series consists of a plot of the amplitude of the harmonics versus frequency, which we call the *amplitude spectrum*, and a plot of the phase of the harmonics versus frequency, which we call the *phase spectrum*. Since the frequency components are discrete, the spectra are called *line spectra*. Such spectra illustrate the frequency content of the signal. Plots of the amplitude and phase spectra are based on Eqs. (15.1), (15.3), and (15.7) and represent the amplitude and phase of the signal at specific frequencies.

EXAMPLE 15.7

The Fourier series for the triangular-type waveform shown in Fig. 15.11c with $A = 5$ is given by the equation

$$v(t) = \sum_{\substack{n=1 \\ n\,\text{odd}}}^{\infty} \left(\frac{20}{n\pi} \sin n\omega_0 t - \frac{40}{n^2\pi^2} \cos n\omega_0 t\right)$$

We wish to plot the first four terms of the amplitude and phase spectra for this signal.

SOLUTION

Since $D_n\underline{/\theta_n} = a_n - jb_n$, the first four terms for this signal are

$$D_1\underline{/\theta_1} = -\frac{40}{\pi^2} - j\frac{20}{\pi} = 7.5\underline{/-122^\circ}$$

$$D_3\underline{/\theta_3} = -\frac{40}{9\pi^2} - j\frac{20}{3\pi} = 2.2\underline{/-102^\circ}$$

$$D_5\underline{/\theta_5} = -\frac{40}{25\pi^2} - j\frac{20}{5\pi} = 1.3\underline{/-97^\circ}$$

$$D_7\underline{/\theta_7} = -\frac{40}{49\pi^2} - j\frac{20}{7\pi} = 0.91\underline{/-95^\circ}$$

Therefore, the plots of the amplitude and phase versus ω are as shown in Fig. 15.12.

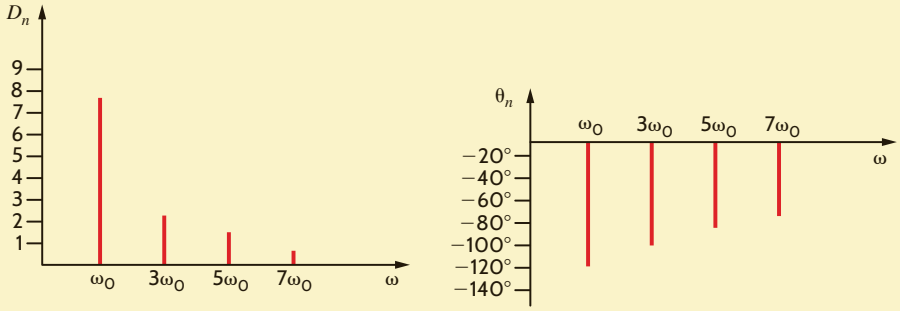

Figure 15.12
Amplitude and phase spectra.

EXAMPLE 15.8

The circuit shown in Fig. 15.13 is a notch filter. At its resonant frequency, the L-C series circuit has zero effective impedance and, as a result, any signal at that frequency is short-circuited. For this reason, the filter is often referred to as a trap.

Consider the following scenario. A system operating at 1 kHz has picked up noise at a fundamental frequency of 10 kHz, as well as some second- and third-harmonic junk. Given this information, we wish to design a filter that will eliminate both the noise and its attendant harmonics.

SOLUTION

The key to the trap is setting the resonant frequency of the L-C series branch to the frequency we wish to eliminate. Since we have three frequency components to remove, 10 kHz, 20 kHz, and 30 kHz, we will simply use three different L-C branches as shown in Fig. 15.14 and set L_1C_1 to trap at 10 kHz, L_2C_2 at 20 kHz, and L_3C_3 at 30 kHz. If we arbitrarily set the value of all inductors to 10 μH and calculate the value of each capacitor, we obtain

$$C_1 = \frac{1}{(2\pi)^2 f^2 L} = \frac{1}{(2\pi)^2(10^8)(10^{-5})} = 25.3\ \mu\text{F}$$

$$C_2 = \frac{1}{(2\pi)^2(4 \times 10^8)(10^{-5})} = 6.34\ \mu\text{F}$$

$$C_3 = \frac{1}{(2\pi)^2(9 \times 10^8)(10^{-5})} = 2.81\ \mu\text{F}$$

The three traps shown in Fig. 15.14 should eliminate the noise and its harmonics.

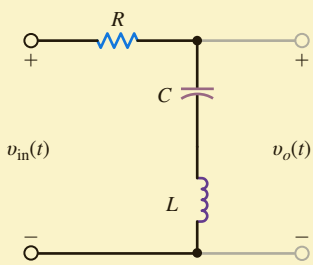

Figure 15.13
A notch filter, or trap, utilizing a series L-C branch.

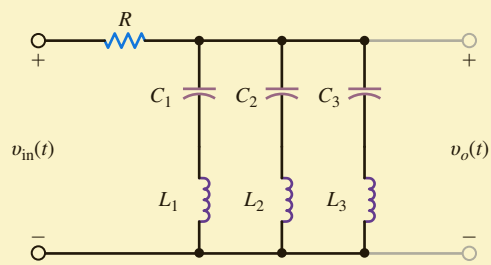

Figure 15.14
The notch filter in Fig. 15.13 expanded to remove three different frequency components.

LEARNING ASSESSMENTS

E15.10 Determine the trigonometric Fourier series for the voltage waveform in Fig. E15.10 and plot the first four terms of the amplitude and phase spectra for this signal.

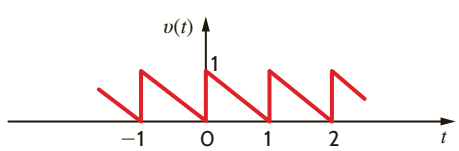

Figure E15.10

ANSWER:
$a_0 = 1/2$;
$D_1 = -j(1/\pi)$;
$D_2 = -j(1/2\pi)$;
$D_3 = -j(1/3\pi)$;
$D_4 = -j(1/4\pi)$.

E15.11 The discrete line spectrum for a periodic function is shown in Fig. E15.11. Determine the expression for $f(t)$.

ANSWER:

$f(t) = 0.25 + 1.35\cos(40\pi t - 135°) + \cos(80\pi t - 90°) + 0.5\cos(120\pi t - 45°) + 0.35\cos(160\pi t - 90°).$

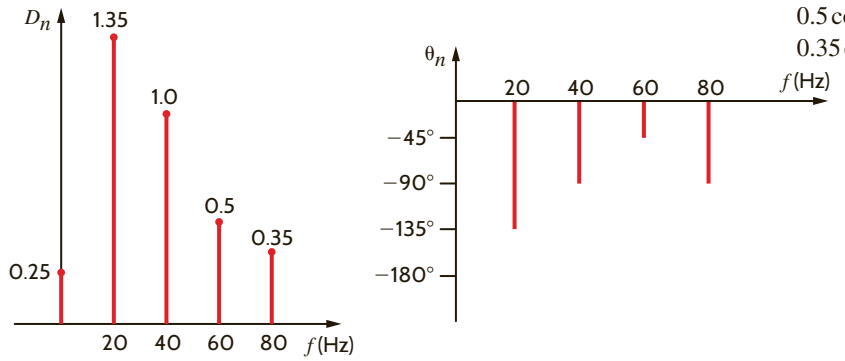

Figure E15.11

STEADY-STATE NETWORK RESPONSE If a periodic signal is applied to a network, the steady-state voltage or current response at some point in the circuit can be found in the following manner. First, we represent the periodic forcing function by a Fourier series. If the input forcing function for a network is a voltage, the input can be expressed in the form

$$v(t) = v_0 + v_1(t) + v_2(t) + \cdots$$

and therefore represented in the time domain as shown in **Fig. 15.15**. Each source has its own amplitude and frequency. Next we determine the response due to each component of the input Fourier series; that is, we use phasor analysis in the frequency domain to determine the network response due to each source. The network response due to each source in the frequency domain is then transformed to the time domain. Finally, we add the time-domain solutions due to each source using the Principle of Superposition to obtain the Fourier series for the total *steady-state* network response.

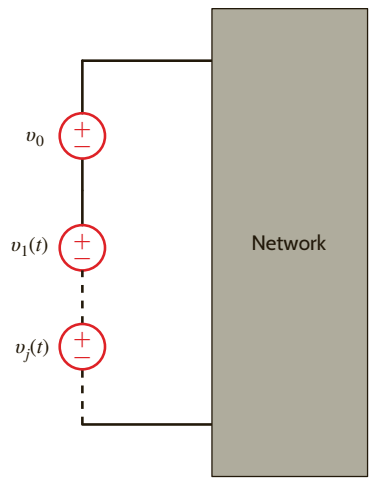

Figure 15.15

Network with a periodic voltage forcing function.

AVERAGE POWER We have shown that when a linear network is forced with a nonsinusoidal periodic signal, voltages and currents throughout the network are of the form

$$v(t) = V_{DC} + \sum_{n=1}^{\infty} V_n \cos\left(n\omega_0 t - \theta_{v_n}\right)$$

and

$$i(t) = I_{DC} + \sum_{n=1}^{\infty} I_n \cos\left(n\omega_0 t - \theta_{i_n}\right)$$

If we employ the passive sign convention and assume that the voltage across an element and the current through it are given by the preceding equations, then from Eq. (9.6),

$$P = \frac{1}{T}\int_{t_0}^{t_0+T} p(t)\,dt = \frac{1}{T}\int_{t_0}^{t_0+T} v(t)i(t)\,dt \qquad \textbf{15.34}$$

Note that the integrand involves the product of two infinite series. However, the determination of the average power is actually easier than it appears. First, note that the product $V_{DC}I_{DC}$ when integrated over a period and divided by the period is simply $V_{DC}I_{DC}$. Second, the product of V_{DC} and any harmonic of the current or I_{DC} and any harmonic of the voltage when integrated over a period yields zero. Third, the product of any two *different* harmonics of the voltage and the current when integrated over a period yields zero. Finally, nonzero terms result only from the products of voltage and current at the *same* frequency. Hence, using the mathematical development that follows Eq. (9.6), we find that

$$P = V_{DC}I_{DC} + \sum_{n=1}^{\infty} \frac{V_n I_n}{2}\cos\left(\theta_{v_n} - \theta_{i_n}\right) \qquad \textbf{15.35}$$

EXAMPLE 15.9

We wish to determine the steady-state voltage $v_o(t)$ in Fig. 15.16 if the input voltage $v(t)$ is given by the expression

$$v(t) = \sum_{\substack{n=1 \\ n\,\text{odd}}}^{\infty} \left(\frac{20}{n\pi} \sin 2nt - \frac{40}{n^2\pi^2} \cos 2nt \right) \text{V}$$

SOLUTION

Note that this source has no constant term, and therefore its dc value is zero. The amplitude and phase for the first four terms of this signal are given in Example 15.7, and therefore the signal $v(t)$ can be written as

$$\begin{aligned} v(t) &= 7.5\cos(2t - 122^\circ) + 2.2\cos(6t - 102^\circ) \\ &\quad + 1.3\cos(10t - 97^\circ) + 0.91\cos(14t - 95^\circ) + \cdots \end{aligned}$$

From the network we find that

$$\mathbf{I} = \frac{\mathbf{V}}{2 + \dfrac{2/j\omega}{2 + 1/j\omega}} = \frac{\mathbf{V}(1 + 2j\omega)}{4 + 4j\omega}$$

$$\mathbf{I}_1 = \frac{\mathbf{I}(1/j\omega)}{2 + 1/j\omega} = \frac{\mathbf{I}}{1 + 2j\omega}$$

$$\mathbf{V}_o = (1)\mathbf{I}_1 = 1 \cdot \frac{\mathbf{V}(1 + 2j\omega)}{4 + 4j\omega} \frac{1}{1 + 2j\omega} = \frac{\mathbf{V}}{4 + 4j\omega}$$

Therefore, since $\omega_0 = 2$,

$$\mathbf{V}_o(n) = \frac{\mathbf{V}(n)}{4 + j8n}$$

The individual components of the output due to the components of the input source are then

$$\mathbf{V}_o(\omega_0) = \frac{7.5\angle -122^\circ}{4 + j8} = 0.84\angle -185.4^\circ \text{ V}$$

$$\mathbf{V}_o(3\omega_0) = \frac{2.2\angle -102^\circ}{4 + j24} = 0.09\angle -182.5^\circ \text{ V}$$

$$\mathbf{V}_o(5\omega_0) = \frac{1.3\angle -97^\circ}{4 + j40} = 0.03\angle -181.3^\circ \text{ V}$$

$$\mathbf{V}_o(7\omega_0) = \frac{0.91\angle -95^\circ}{4 + j56} = 0.016\angle -181^\circ \text{ V}$$

Hence, the steady-state output voltage $v_o(t)$ can be written as

$$\begin{aligned} v_o(t) &= 0.84\cos(2t - 185.4^\circ) + 0.09\cos(6t - 182.5^\circ) \\ &\quad + 0.03\cos(10t - 181.3^\circ) + 0.016\cos(14t - 181^\circ) + \cdots \text{V} \end{aligned}$$

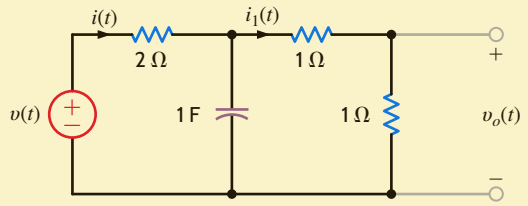

Figure 15.16
RC circuit employed in Example 15.9.

EXAMPLE 15.10

In the network in Fig. 15.17, $v(t) = 42 + 16\cos(377t + 30°) + 12\cos(754t - 20°)$ V. We wish to compute the current $i(t)$ and determine the average power absorbed by the network.

SOLUTION

The capacitor acts as an open circuit to dc, and therefore $I_{DC} = 0$. At $\omega = 377$ rad/s,

$$\frac{1}{j\omega C} = \frac{1}{j(377)(100)(10)^{-6}} = -j26.53\ \Omega$$

$$j\omega L = j(377)(20)10^{-3} = j7.54\ \Omega$$

Hence,

$$\mathbf{I}_{377} = \frac{16\underline{/30°}}{16 + j7.54 - j26.53} = 0.64\underline{/79.88°}\ \text{A}$$

At $\omega = 754$ rad/s,

$$\frac{1}{j\omega C} = \frac{1}{j(754)(100)(10)^{-6}} = -j13.26\ \Omega$$

$$j\omega L = j(754)(20)10^{-3} = j15.08\ \Omega$$

Hence,

$$\mathbf{I}_{754} = \frac{12\underline{/20°}}{16 + j15.08 - j13.26} = 0.75\ \underline{/-26.49°}\ \text{A}$$

Therefore, the current $i(t)$ is

$$i(t) = 0.64\cos(377t + 79.88°) + 0.75\cos(754t + 26.49°)\ \text{A}$$

and the average power absorbed by the network is

$$P = (42)(0) + \frac{(16)(0.64)}{2}\cos(30° - 79.88°) + \frac{(12)(0.75)}{2}\cos(-20° + 26.49°) = 7.77\ \text{W}$$

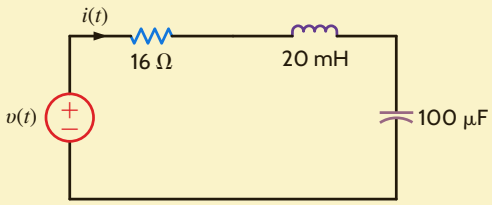

Figure 15.17
Network used in Example 15.10.

PROBLEM-SOLVING STRATEGY

STEADY-STATE RESPONSE TO PERIODIC FORCING FUNCTIONS

STEP 1. Determine the Fourier series for the periodic forcing function, which is now expressed as a summation of harmonically related sinusoidal functions.

STEP 2. Use phasor analysis to determine the network response due to each sinusoidal function acting alone.

STEP 3. Use the Principle of Superposition to add the time-domain solution from each source acting alone to determine the total steady-state network response.

STEP 4. If you need to calculate the average power dissipated in a network element, determine the average power dissipated in that element due to each source acting alone and then sum these for the total power dissipation from the periodic forcing function.

LEARNING ASSESSMENTS

E15.12 Determine the expression for the steady-state current $i(t)$ in Fig. E15.12 if the input voltage $v_S(t)$ is given by the expression

$$v_S(t) = \frac{20}{\pi} + \sum_{n=1}^{\infty} \frac{-40}{\pi(4n^2 - 1)} \cos 2nt \text{ V}$$

ANSWER:
$i(t) = 2.12 + \sum_{n=1}^{\infty} \frac{-40}{\pi(4n^2 - 1)} \frac{1}{A_n} \cos(2nt - \theta_n)$ A.

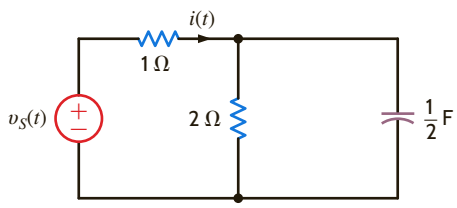

Figure E15.12

E15.13 At the input terminals of a network, the voltage $v(t)$ and the current $i(t)$ are given by the following expressions:

$$v(t) = 64 + 36\cos(377t + 60°) - 24\cos(754t + 102°) \text{ V}$$
$$i(t) = 1.8\cos(377t + 45°) + 1.2\cos(754t + 100°) \text{ A}$$

Find the average power absorbed by the network.

ANSWER:
$P = 16.91$ W.

E15.14 Determine the first three terms of the steady-state current $i(t)$ in Fig. E15.14 if the input voltage is given by

$$v(t) = \frac{30}{\pi} + 15\sin 10t + \sum_{\substack{n=1 \\ n \text{ even}}}^{\infty} \frac{60}{\pi(1 - n^2)} \cos 10nt \text{ V}.$$

ANSWER:
$i(t) = 3.18 + 4.12\cos(10t + 106°) + 1.45\cos(20t + 166°)$ A.

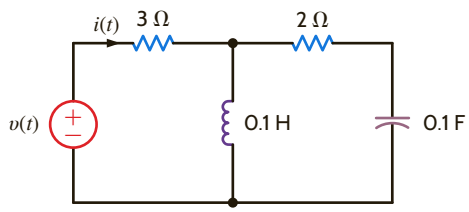

Figure E15.14

E15.15 Find the average power absorbed by the network in Fig. E15.15 if

$$v(t) = 20 + 5\cos 377t + 3.5\cos(754t - 20°) \text{ V and}$$
$$i(t) = 1.2\cos(377t - 30°) + 0.8\cos(754t + 45°) \text{ A}$$

ANSWER:
$P = 3.19$ W.

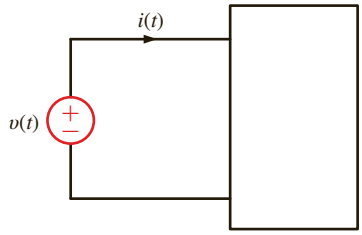

Figure E15.15

15.2 Fourier Transform

The preceding sections of this chapter have illustrated that the exponential Fourier series can be used to represent a periodic signal for all time. We will now consider a technique for representing an aperiodic signal for all values of time.

Suppose that an aperiodic signal $f(t)$ is as shown in **Fig. 15.18a**. We now construct a new signal $f_p(t)$ that is identical to $f(t)$ in the interval $-T/2$ to $T/2$ but is *periodic* with period T, as shown in **Fig. 15.18b**. Since $f_p(t)$ is periodic, it can be represented in the interval $-\infty$ to ∞ by an exponential Fourier series

$$f_p(t) = \sum_{n=-\infty}^{\infty} \mathbf{c}_n e^{jn\omega_0 t} \qquad \textbf{15.36}$$

where

$$\mathbf{c}_n = \frac{1}{T}\int_{-T/2}^{T/2} f_p(t)\, e^{-jn\omega_0 t}\, dt \qquad \textbf{15.37}$$

and

$$\omega_0 = \frac{2\pi}{T} \qquad \textbf{15.38}$$

At this point we note that if we take the limit of the function $f_p(t)$ as $T \to \infty$, the periodic signal in Fig. 15.18b approaches the aperiodic signal in Fig. 15.18a; that is, the repetitious signals centered at $-T$ and $+T$ in Fig. 15.18b are moved to infinity.

The line spectrum for the periodic signal exists at harmonic frequencies ($n\omega_0$), and the incremental spacing between the harmonics is

$$\Delta\omega = (n+1)\omega_0 - n\omega_0 = \omega_0 = \frac{2\pi}{T} \qquad \textbf{15.39}$$

As $T \to \infty$, the lines in the frequency spectrum for $f_p(t)$ come closer and closer together, $\Delta\omega$ approaches the differential $d\omega$, and $n\omega_0$ can take on any value of ω. Under these conditions, the line spectrum becomes a continuous spectrum. Since as $T \to \infty$, $\mathbf{c}_n \to 0$ in Eq. (15.37), we will examine the product $\mathbf{c}_n T$, where

$$\mathbf{c}_n T = \int_{-T/2}^{T/2} f_p(t)\, e^{-jn\omega_0 t}\, dt$$

In the limit as $T \to \infty$,

$$\lim_{T\to\infty} (\mathbf{c}_n T) = \lim_{T\to\infty} \int_{-T/2}^{T/2} f_p(t)\, e^{-jn\omega_0 t}\, dt$$

which, in view of the previous discussion, can be written as

$$\lim_{T\to\infty} (\mathbf{c}_n T) = \int_{-\infty}^{\infty} f(t)\, e^{-j\omega t}\, dt$$

This integral is the Fourier transform of $f(t)$, which we will denote as $\mathbf{F}(\omega)$, and hence

$$\mathbf{F}(\omega) = \int_{-\infty}^{\infty} f(t)\, e^{-j\omega t}\, dt \qquad \textbf{15.40}$$

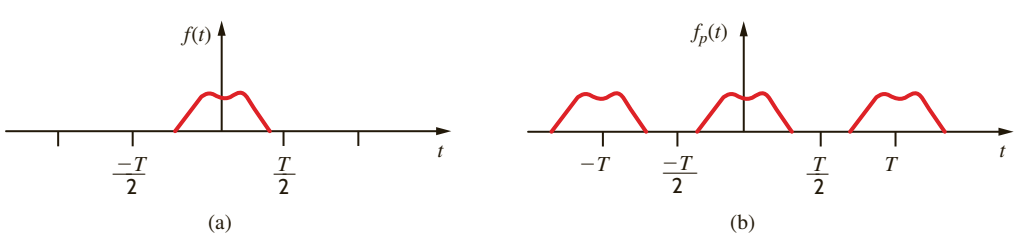

Figure 15.18
Aperiodic and periodic signals.

Similarly, $f_p(t)$ can be expressed as

$$\begin{aligned} f_p(t) &= \sum_{n=-\infty}^{\infty} \mathbf{c}_n e^{jn\omega_0 t} \\ &= \sum_{n=-\infty}^{\infty} (\mathbf{c}_n T)\, e^{jn\omega_0 t}\, \frac{1}{T} \\ &= \sum_{n=-\infty}^{\infty} (\mathbf{c}_n T)\, e^{jn\omega_0 t}\, \frac{\Delta\omega}{2\pi} \end{aligned}$$

which in the limit as $T \to \infty$ becomes

$$f(t) = \frac{1}{2\pi} \int_{-\infty}^{\infty} \mathbf{F}(\omega)\, e^{j\omega t}\, d\omega \qquad \textbf{15.41}$$

Eqs. (15.40) and (15.41) constitute what is called the *Fourier transform pair.* Since $\mathbf{F}(\omega)$ is the Fourier transform of $f(t)$ and $f(t)$ is the inverse Fourier transform of $\mathbf{F}(\omega)$, they are normally expressed in the form

$$\mathbf{F}(\omega) = \mathcal{F}[f(t)] = \int_{-\infty}^{\infty} f(t)\, e^{-j\omega t}\, dt \qquad \textbf{15.42}$$

$$f(t) = \mathcal{F}^{-1}[\mathbf{F}(\omega)] = \frac{1}{2\pi} \int_{-\infty}^{\infty} \mathbf{F}(\omega)\, e^{j\omega t}\, d\omega \qquad \textbf{15.43}$$

SOME IMPORTANT TRANSFORM PAIRS There are a number of important Fourier transform pairs. In the following material we derive a number of them and then list some of the more common ones in tabular form.

EXAMPLE 15.11

We wish to derive the Fourier transform for the voltage pulse shown in Fig. 15.19a.

SOLUTION

Using Eq. (15.42), the Fourier transform is

$$\begin{aligned} \mathbf{F}(\omega) &= \int_{-\delta/2}^{\delta/2} V e^{-j\omega t}\, dt \\ &= \frac{V}{-j\omega} e^{-j\omega t} \Big|_{-\delta/2}^{\delta/2} \\ &= V\, \frac{e^{-j\omega\delta/2} - e^{+j\omega\delta/2}}{-j\omega} \\ &= V\delta\, \frac{\sin(\omega\delta/2)}{\omega\delta/2} \end{aligned}$$

Therefore, the Fourier transform for the function

$$f(t) = \begin{cases} 0 & -\infty < t \le -\dfrac{\delta}{2} \\ V & -\dfrac{\delta}{2} < t \le \dfrac{\delta}{2} \\ 0 & \dfrac{\delta}{2} < t < \infty \end{cases}$$

is

$$\mathbf{F}(\omega) = V\delta\, \frac{\sin(\omega\delta/2)}{\omega\delta/2}$$

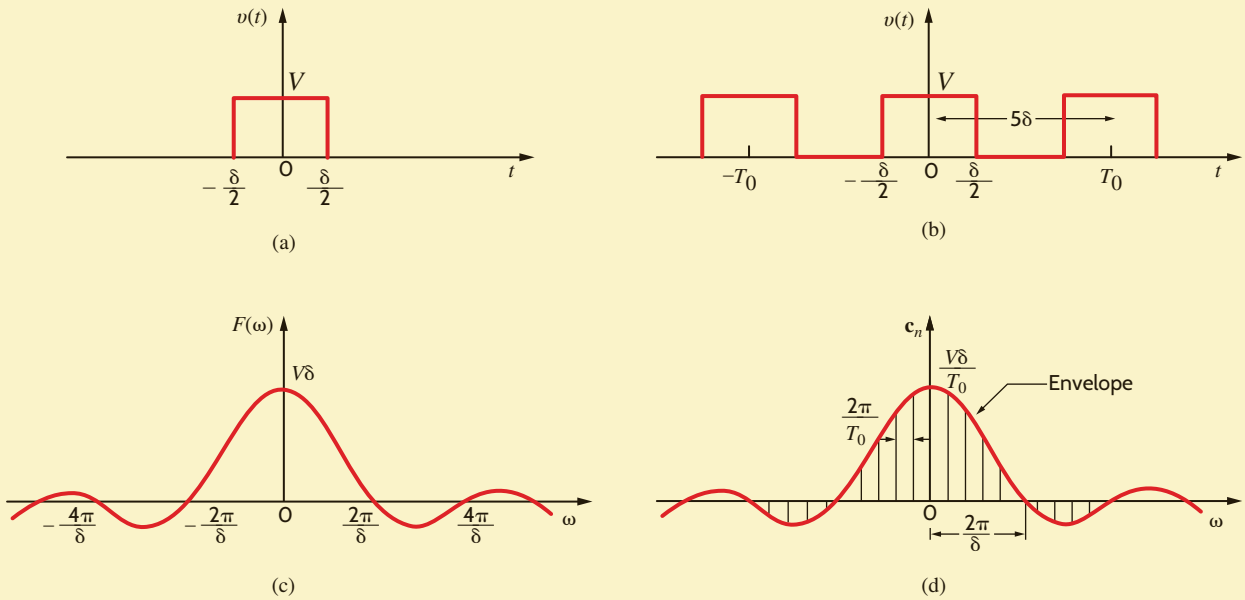

Figure 15.19

Pulses and their spectra.

A plot of this function is shown in **Fig. 15.19c**. Let us explore this example even further. Consider now the pulse train shown in **Fig. 15.19b**. Using the techniques that have been demonstrated earlier, we can show that the Fourier coefficients for this waveform are

$$\mathbf{c}_n = \frac{V\delta}{T_0}\,\frac{\sin(n\omega_0\delta/2)}{n\omega_0\delta/2}$$

The line spectrum for $T_0 = 5\delta$ is shown in **Fig. 15.19d**.

The equations and figures in this example indicate that as $T_0 \to \infty$ and the periodic function becomes aperiodic, the lines in the discrete spectrum become denser and the amplitude gets smaller, and the amplitude spectrum changes from a line spectrum to a continuous spectrum. Note that the envelope for the discrete spectrum has the same shape as the continuous spectrum. Since the Fourier series represents the amplitude and phase of the signal at specific frequencies, the Fourier transform also specifies the frequency content of a signal.

EXAMPLE 15.12

Find the Fourier transform for the unit impulse function $\delta(t)$.

SOLUTION

The Fourier transform of the unit impulse function $\delta(t - a)$ is

$$\mathbf{F}(\omega) = \int_{-\infty}^{\infty} \delta(t - a)e^{-j\omega t}\,dt$$

Using the sampling property of the unit impulse, we find that

$$\mathbf{F}(\omega) = e^{-j\omega a}$$

and if $a = 0$, then

$$\mathbf{F}(\omega) = 1$$

Note then that the $\mathbf{F}(\omega)$ for $f(t) = \delta(t)$ is *constant for all frequencies*. This is an important property, as we shall see later.

EXAMPLE 15.13

We wish to determine the Fourier transform of the function $f(t) = e^{j\omega_0 t}$.

SOLUTION

In this case note that if $\mathbf{F}(\omega) = 2\pi\delta(\omega - \omega_0)$, then

$$f(t) = \frac{1}{2\pi}\int_{-\infty}^{\infty} 2\pi\delta(\omega - \omega_0)\, e^{j\omega t}\, d\omega$$
$$= e^{j\omega_0 t}$$

Therefore, $f(t) = e^{j\omega_0 t}$ and $\mathbf{F}(\omega) = 2\pi\delta(\omega - \omega_0)$ represent a Fourier transform pair.

LEARNING ASSESSMENT

E15.16 If $f(t) = \sin \omega_0 t$, find $\mathbf{F}(\omega)$.

ANSWER:
$\mathbf{F}(\omega) = \pi j[\delta(\omega + \omega_0) - \delta(\omega - \omega_0)]$.

EXAMPLE 15.14

In AM (amplitude modulation) radio, there are two very important waveforms—the signal, $s(t)$, and the carrier. All of the information we desire to transmit, voice, music, and so on, is contained in the signal waveform, which is in essence transported by the carrier. Therefore, the Fourier transform of $s(t)$ contains frequencies from about 50 Hz to 20,000 Hz. The carrier, $c(t)$, is a sinusoid oscillating at a frequency much greater than those in $s(t)$. For example, the FCC (Federal Communications Commission) rules and regulations have allocated the frequency range 540 kHz to 1.7 MHz for AM radio station carrier frequencies. Even the lowest possible carrier frequency allocation of 540 kHz is much greater than the audio frequencies in $s(t)$. In fact, when a station broadcasts its call letters and frequency, they are telling you the carrier's frequency, which the FCC assigned to that station!

In simple cases, the signal, $s(t)$, is modified to produce a voltage of the form

$$v(t) = [A + s(t)] \cos(\omega_c t)$$

where A is a constant and ω_c is the carrier frequency in rad/s. This voltage, $v(t)$, with the signal "coded" within, is sent to the antenna and is broadcast to the public, whose radios "pick up" a faint replica of the waveform $v(t)$.

Let us plot the magnitude of the Fourier transform of both $s(t)$ and $v(t)$ given that $s(t)$ is

$$s(t) = \cos(2\pi f_a t)$$

where f_a is 1000 Hz, the carrier frequency is 900 kHz, and the constant A is unity.

SOLUTION

The Fourier transform of $s(t)$ is

$$\mathbf{S}(\omega) = \mathcal{F}[\cos(\omega_a t)] = \pi\delta(\omega - \omega_a) + \pi\delta(\omega + \omega_a)$$

and is shown in **Fig. 15.20**.

The voltage $v(t)$ can be expressed in the form

$$v(t) = [1 + s(t)] \cos(\omega_c t) = \cos(\omega_c t) + s(t) \cos(\omega_c t)$$

The Fourier transform for the carrier is

$$\mathcal{F}[\cos(\omega_c t)] = \pi\delta(\omega - \omega_c) + \pi\delta(\omega + \omega_c)$$

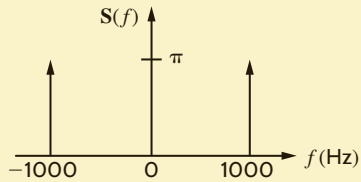

Figure 15.20
Fourier transform magnitude for $s(t)$ versus frequency.

The term $s(t)\cos(\omega_c t)$ can be written as

$$s(t)\cos(\omega_c t) = s(t)\left\{\frac{e^{j\omega_c t} + e^{-j\omega_c t}}{2}\right\}$$

Using the property of modulation as given in Table 15.3, we can express the Fourier transform of $s(t)\cos(\omega_c t)$ as

$$\mathcal{F}[s(t)\cos(\omega_c t)] = \frac{1}{2}\{\mathbf{S}(\omega - \omega_c) + \mathbf{S}(\omega + \omega_c)\}$$

Employing $\mathbf{S}(\omega)$, we find

$$\begin{aligned}\mathcal{F}[s(t)\cos(\omega_c t)] &= \mathcal{F}[\cos(\omega_a t)\cos(\omega_c t)]\\ &= \frac{\pi}{2}\{\delta(\omega - \omega_a - \omega_c) + \delta(\omega + \omega_a - \omega_c)\\ &\quad + \delta(\omega - \omega_a + \omega_c) + \delta(\omega + \omega_a + \omega_c)\}\end{aligned}$$

Finally, the Fourier transform of $v(t)$ is

$$\begin{aligned}\mathbf{V}(\omega) = \frac{\pi}{2}\{&2\delta(\omega - \omega_c) + 2\delta(\omega + \omega_c) + \delta(\omega - \omega_a - \omega_c)\\ &+ \delta(\omega + \omega_a - \omega_c) + \delta(\omega - \omega_a + \omega_c) + \delta(\omega + \omega_a + \omega_c)\}\end{aligned}$$

which is shown in **Fig. 15.21**. Notice that $\mathbf{S}(\omega)$ is centered about the carrier frequency. This is the effect of modulation.

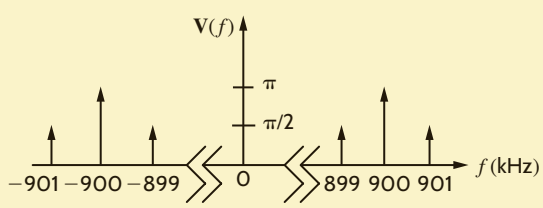

Figure 15.21
Fourier transform of the transmitted waveform $v(t)$ versus frequency.

A number of useful Fourier transform pairs are shown in Table 15.2.

TABLE 15.2 Fourier transform pairs

$f(t)$	$\mathbf{F}(\omega)$
$\delta(t - a)$	$e^{-j\omega a}$
A	$2\pi A\delta(\omega)$
$e^{j\omega_0 t}$	$2\pi\delta(\omega - \omega_0)$
$\cos\omega_0 t$	$\pi\delta(\omega - \omega_0) + \pi\delta(\omega + \omega_0)$
$\sin\omega_0 t$	$j\pi\delta(\omega + \omega_0) - j\pi\delta(\omega - \omega_0)$
$e^{-at}u(t),\ a > 0$	$\dfrac{1}{a + j\omega}$
$e^{-\alpha\lvert t\rvert},\ a > 0$	$\dfrac{2a}{a^2 + \omega^2}$
$e^{-at}\cos\omega_0 t u(t),\ a > 0$	$\dfrac{j\omega + a}{(j\omega + a)^2 + \omega_0^2}$
$e^{-at}\sin\omega_0 t u(t),\ a > 0$	$\dfrac{\omega_0}{(j\omega + a)^2 + \omega_0^2}$

TABLE 15.3 Properties of the Fourier transform

$f(t)$	$\mathbf{F}(\omega)$ PROPERTY	
$Af(t)$	$A\mathbf{F}(\omega)$	Linearity
$f_1(t) \pm f_2(t)$	$\mathbf{F}_1(\omega) \pm \mathbf{F}_2(\omega)$	
$f(at)$	$\frac{1}{a}\mathbf{F}\left(\frac{\omega}{a}\right),\ a > 0$	Time-scaling
$f(t - t_0)$	$e^{-j\omega t_0}\mathbf{F}(\omega)$	Time-shifting
$e^{j\omega t_0}f(t)$	$\mathbf{F}(\omega - \omega_0)$	Modulation
$\frac{d^n f(t)}{dt^n}$	$(j\omega)^n\mathbf{F}(\omega)$	
$t^n f(t)$	$(j)^n\frac{d^n\mathbf{F}(\omega)}{d\omega^n}$	Differentiation
$\int_{-\infty}^{\infty} f_1(x)f_2(t - x)\,dx$	$\mathbf{F}_1(\omega)\mathbf{F}_2(\omega)$	
$f_1(t)f_2(t)$	$\frac{1}{2\pi}\int_{-\infty}^{\infty}\mathbf{F}_1(x)\mathbf{F}_2(\omega - x)\,dx$	Convolution

SOME PROPERTIES OF THE FOURIER TRANSFORM The Fourier transform defined by the equation

$$\mathbf{F}(\omega) = \int_{-\infty}^{\infty} f(t)e^{-j\omega t}\,dt$$

has a number of important properties. Table 15.3 provides a short list of a number of these properties.

The proofs of these properties are generally straightforward; however, as an example we will demonstrate the time convolution property.

$$\text{If } \mathcal{F}[f_1(t)] = \mathbf{F}_1(\omega) \text{ and } \mathcal{F}[f_2(t)] = \mathbf{F}_2(\omega), \text{ then}$$

$$\mathcal{F}\left[\int_{-\infty}^{\infty} f_1(x)f_2(t - x)\,dx\right] = \int_{t=-\infty}^{\infty}\int_{x=-\infty}^{\infty} f_1(x)f_2(t - x)\,dx\,e^{-j\omega t}\,dt$$

$$= \int_{x=-\infty}^{\infty} f_1(x)\int_{t=-\infty}^{\infty} f_2(t - x)\,e^{-j\omega t}\,dt\,dx$$

If we now let $u = t - x$, then

$$\mathcal{F}\left[\int_{-\infty}^{\infty} f_1(x)f_2(t - x)\,dx\right] = \int_{x=-\infty}^{\infty} f_1(x)\int_{u=-\infty}^{\infty} f_2(u)\,e^{-j\omega(u + x)}\,du\,dx$$

$$= \int_{x=-\infty}^{\infty} f_1(x)e^{-j\omega x}\int_{u=-\infty}^{\infty} f_2(u)\,e^{-j\omega u}\,du\,dx$$

$$= \mathbf{F}_1(\omega)\mathbf{F}_2(\omega) \qquad \textbf{15.44}$$

We should note very carefully the time convolution property of the Fourier transform. With reference to **Fig. 15.22**, this property states that if $\mathbf{V}_i(\omega) = \mathcal{F}[v_i(t)]$, $\mathbf{H}(\omega) = \mathcal{F}[h(t)]$, and $\mathbf{V}_o(\omega) = \mathcal{F}[v_o(t)]$, then:

$$\mathbf{V}_o(\omega) = \mathbf{H}(\omega)\mathbf{V}_i(\omega) \qquad \textbf{15.45}$$

where $\mathbf{V}_i(\omega)$ represents the input signal, $\mathbf{H}(\omega)$ is the network transfer function, and $\mathbf{V}_o(\omega)$ represents the output signal. Eq. (15.45) tacitly assumes that the initial conditions of the network are zero.

Figure 15.22

Representation of the time convolution property.

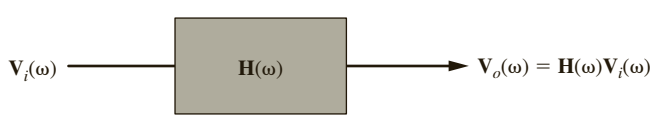

LEARNING ASSESSMENTS

E15.17 Determine the output $v_o(t)$ in Fig. E15.17 if the signal $v_i(t) = e^{-t}u(t)$ V, the network impulse response $h(t) = e^{-2t}u(t)$, and all initial conditions are zero.

ANSWER:
$v_o(t) = (e^{-t} - e^{-2t})u(t)$ V.

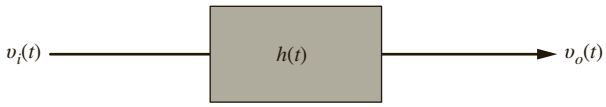

Figure E15.17

E15.18 Use the transform technique to find $v_o(t)$ in Fig. E15.18 if $v(t) = 15 \cos 10t$ V.

ANSWER:
$v_o(t) = 4.12 \cos (10t + 74°)$ V.

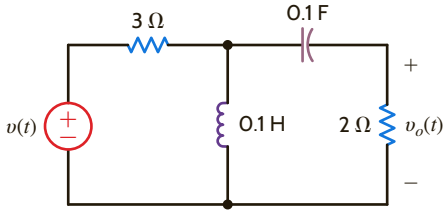

Figure E15.18

PARSEVAL'S THEOREM A mathematical statement of Parseval's theorem is

$$\int_{-\infty}^{\infty} f^2(t)\, dt = \frac{1}{2\pi}\int_{-\infty}^{\infty} |\mathbf{F}(\omega)|^2\, d\omega \qquad \textbf{15.46}$$

This relationship can be easily derived as follows:

$$\begin{aligned}
\int_{-\infty}^{\infty} f^2(t)\, dt &= \int_{-\infty}^{\infty} f(t)\, \frac{1}{2\pi}\int_{-\infty}^{\infty} \mathbf{F}(\omega)e^{j\omega t}\, d\omega\, dt \\
&= \frac{1}{2\pi}\int_{-\infty}^{\infty} \mathbf{F}(\omega)\int_{-\infty}^{\infty} f(t)e^{-j(-\omega)t}\, dt\, d\omega \\
&= \int_{-\infty}^{\infty} \frac{1}{2\pi}\mathbf{F}(\omega)\mathbf{F}(-\omega)\, d\omega \\
&= \int_{-\infty}^{\infty} \frac{1}{2\pi}\mathbf{F}(\omega)\mathbf{F}^*(\omega)\, d\omega \\
&= \int_{-\infty}^{\infty} \frac{1}{2\pi}|\mathbf{F}(\omega)|^2\, d\omega
\end{aligned}$$

The importance of Parseval's theorem can be seen if we imagine that $f(t)$ represents the current in a 1-Ω resistor. Since $f^2(t)$ is power and the integral of power over time is energy, Eq. (15.46) shows that we can compute this 1-Ω energy or normalized energy in either the time domain or the frequency domain.

EXAMPLE 15.15

Using the transform technique, we wish to determine $v_o(t)$ in Fig. 15.23 if (a) $v_i(t) = 5e^{-2t}u(t)$ V and (b) $v_i(t) = 5\cos 2t$ V.

SOLUTION

a. In this case since $v_i(t) = 5e^{-2t}u(t)$ V, then

$$\mathbf{V}_i(\omega) = \frac{5}{2 + j\omega}\,\text{V}$$

$\mathbf{H}(\omega)$ for the network is

$$\mathbf{H}(\omega) = \frac{R}{R + j\omega L} = \frac{10}{10 + j\omega}$$

From Eq. (15.45),

$$\begin{aligned}\mathbf{V}_o(\omega) &= \mathbf{H}(\omega)\,\mathbf{V}_i(\omega)\\ &= \frac{50}{(2 + j\omega)(10 + j\omega)}\\ &= \frac{50}{8}\left(\frac{1}{2 + j\omega} - \frac{1}{10 + j\omega}\right)\end{aligned}$$

Hence, from Table 15.2, we see that

$$v_o(t) = 6.25[e^{-2t}u(t) - e^{-10t}u(t)]\ \text{V}$$

b. In this case, since $v_i(t) = 5\cos 2t$,

$$\mathbf{V}_i(\omega) = 5\pi\delta(\omega - 2) + 5\pi\delta(\omega + 2)\ \text{V}$$

The output voltage in the frequency domain is then

$$\mathbf{V}_o(\omega) = \frac{50\pi[\delta(\omega - 2) + \delta(\omega + 2)]}{(10 + j\omega)}$$

Using the inverse Fourier transform gives us

$$v_o(t) = \mathcal{F}^{-1}[\mathbf{V}_o(\omega)] = \frac{1}{2\pi}\int_{-\infty}^{\infty} 50\pi\,\frac{\delta(\omega - 2) + \delta(\omega + 2)}{10 + j\omega}\,e^{j\omega t}\,d\omega$$

Employing the sampling property of the unit impulse function, we obtain

$$\begin{aligned}v_o(t) &= 25\left(\frac{e^{j2t}}{10 + j2} + \frac{e^{-j2t}}{10 - j2}\right)\\ &= 25\left(\frac{e^{j2t}}{10.2e^{j11.31°}} + \frac{e^{-j2t}}{10.2e^{-j11.31°}}\right)\\ &= 4.90\cos(2t - 11.31°)\ \text{V}\end{aligned}$$

This result can be easily checked using phasor analysis.

Figure 15.23
Simple *RL* circuit.

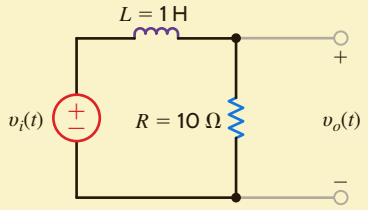

EXAMPLE 15.16

Consider the network shown in **Fig. 15.24a**. This network represents a simple low-pass filter, as shown in Chapter 12. We wish to illustrate the impact of this network on the input signal by examining the frequency characteristics of the output signal and the relationship between the 1-Ω or normalized energy at the input and output of the network.

SOLUTION

The network transfer function is

$$\mathbf{H}(\omega) = \frac{1/RC}{1/RC + j\omega} = \frac{5}{5 + j\omega} = \frac{1}{1 + 0.2j\omega}$$

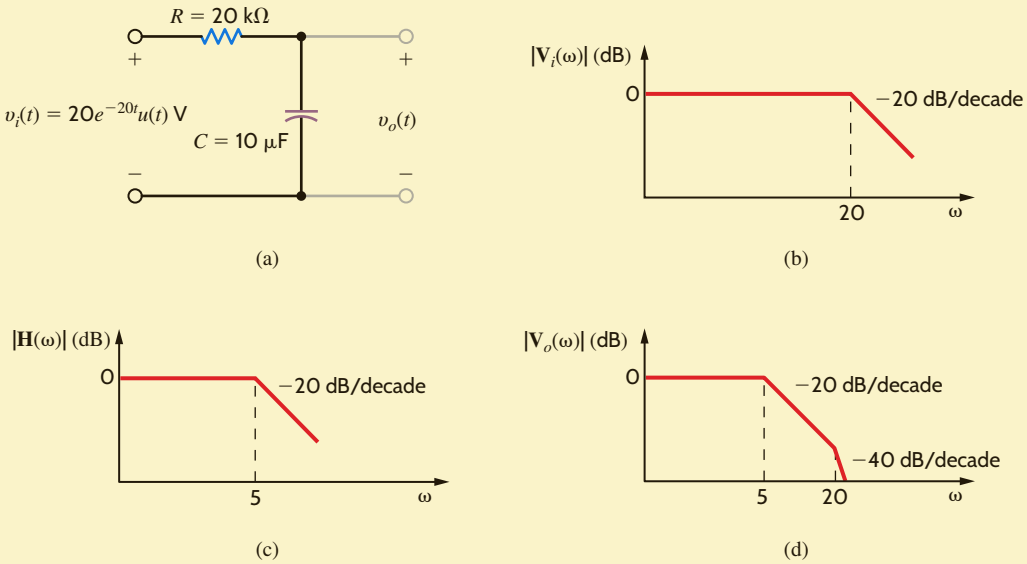

Figure 15.24
Low-pass filter, its frequency characteristic, and its output spectra.

The Fourier transform of the input signal is

$$\mathbf{V}_i(\omega) = \frac{20}{20 + j\omega} = \frac{1}{1 + 0.05j\omega}$$

Then, using Eq. (15.45), the Fourier transform of the output is

$$\mathbf{V}_o(\omega) = \frac{1}{(1 + 0.2j\omega)(1 + 0.05j\omega)}$$

Using the techniques of Chapter 12, we note that the straight-line log-magnitude plot (frequency characteristic) for these functions is shown in **Figs. 15.24b–d**. Note that the low-pass filter passes the low frequencies of the input signal but attenuates the high frequencies.

The normalized energy at the filter input is

$$\begin{aligned} W_i &= \int_0^\infty (20e^{-20t})^2\, dt \\ &= \frac{400}{-40} e^{-40t} \Big|_0^\infty \\ &= 10 \text{ J} \end{aligned}$$

The normalized energy at the filter output can be computed using Parseval's theorem. Since

$$\mathbf{V}_o(\omega) = \frac{100}{(5 + j\omega)(20 + j\omega)}$$

and

$$|\mathbf{V}_o(\omega)|^2 = \frac{10^4}{(\omega^2 + 25)(\omega^2 + 400)}$$

$|\mathbf{V}_o(\omega)|^2$ is an even function, and therefore

$$W_o = 2\left(\frac{1}{2\pi}\right)\int_0^\infty \frac{10^4\, d\omega}{(\omega^2 + 25)(\omega^2 + 400)}$$

However, we can use the fact that

$$\frac{10^4}{(\omega^2 + 25)(\omega^2 + 400)} = \frac{10^4/375}{\omega^2 + 25} - \frac{10^4/375}{\omega^2 + 400}$$

Then

$$\begin{aligned} W_o &= \frac{1}{\pi}\left(\int_0^\infty \frac{10^4/375}{\omega^2 + 25}\, d\omega - \int_0^\infty \frac{10^4/3\,75}{\omega^2 + 400}\, d\omega\right) \\ &= \frac{10^4}{375}\left(\frac{1}{\pi}\right)\left[\frac{1}{5}\left(\frac{\pi}{2}\right) - \frac{1}{20}\left(\frac{\pi}{2}\right)\right] \\ &= 2.0 \text{ J} \end{aligned}$$

LEARNING ASSESSMENTS

E15.19 Compute the total 1-Ω energy content of the signal $v_i(t) = e^{-2t}u(t)$ V using both the time-domain and frequency-domain approaches.

ANSWER:
$W = 0.25$ J.

E15.20 Compute the 1-Ω energy content of the signal $v_i(t) = e^{-2t}u(t)$ V in the frequency range from 0 to 1 rad/s.

ANSWER:
$W = 0.07$ J.

E15.21 Determine the total 1-Ω energy content of the output $v_o(t)$ in Fig. E15.21 if $v_i(t) = 5e^{2t}u(t)$ V.

ANSWER:
$W = 5.21$ J.

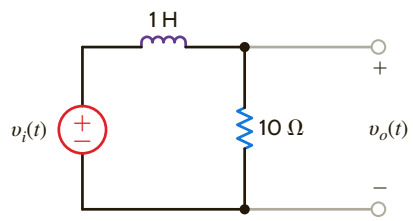

Figure E15.21

Example 15.16 illustrates the effect that $\mathbf{H}(\omega)$ has on the frequency spectrum of the input signal. In general, $\mathbf{H}(\omega)$ can be selected to shape that spectrum in some prescribed manner. As an illustration of this effect, consider the *ideal* frequency spectrums shown in **Fig. 15.25**. **Fig. 15.25a** shows an ideal input magnitude spectrum $|\mathbf{V}_i(\omega)|$. $|\mathbf{H}(\omega)|$ and the output magnitude spectrum $|\mathbf{V}_o(\omega)|$, which are related by Eq. (15.45), are shown in **Figs. 15.25b–e** for *ideal* low-pass, high-pass, band-pass, and band-elimination filters, respectively.

We note that by using Parseval's theorem we can compute the total energy content of a signal using either a time-domain or frequency-domain approach. However, the frequency-domain approach is more flexible in that it permits us to determine the energy content of a signal within some specified frequency band.

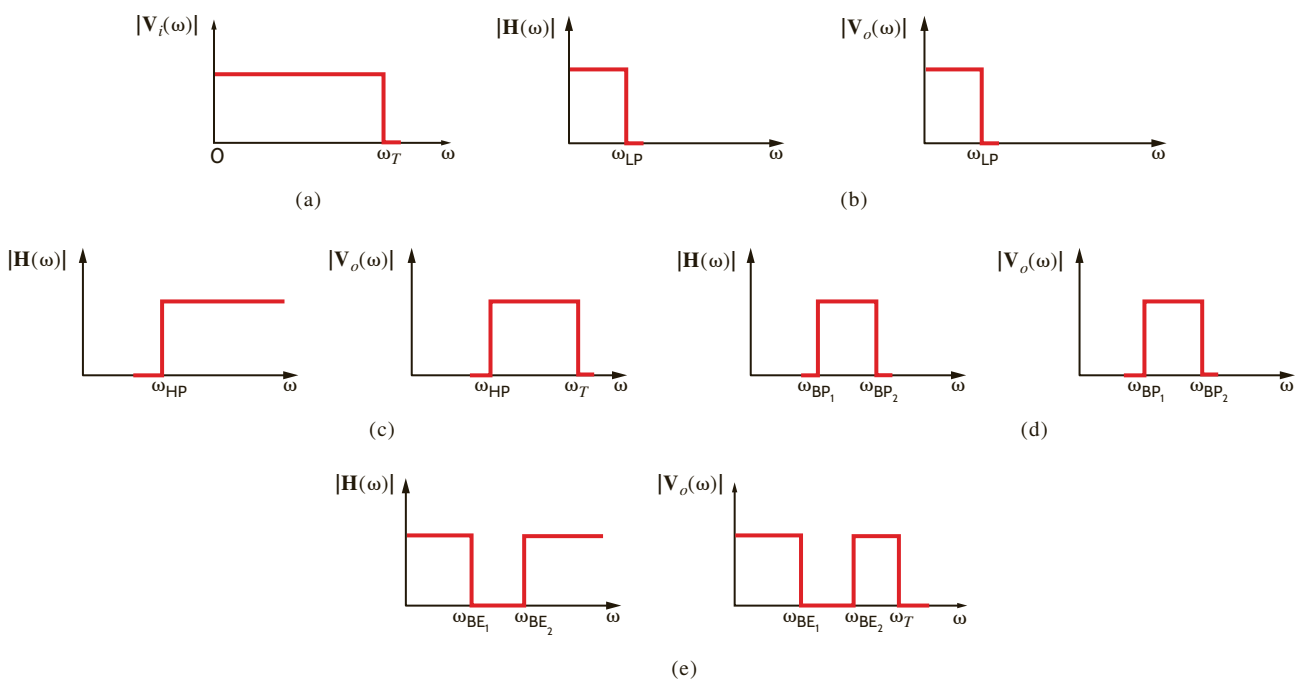

Figure 15.25
Frequency spectra for the input and output of ideal low-pass, high-pass, band-pass, and band-elimination filters.

SUMMARY

- A periodic function, its representation using a Fourier series, and some of the useful properties of a Fourier series are outlined here.
- ***A periodic function***

$$f(t) = f(t + nT_0), \quad n = 1, 2, 3, \ldots \text{ and } T_0 \text{ is the period}$$

- ***Exponential Fourier series of a periodic function***

$$f(t) = \sum_{n=-\infty}^{\infty} \mathbf{c}_n e^{jn\omega_0 t}, \qquad \mathbf{c}_n = \frac{1}{T_0}\int_{t_1}^{t_1+T_0} f(t)e^{-jn\omega_0 t}\,dt$$

- ***Trigonometric Fourier series of a periodic function***

$$f(t) = a_0 + \sum_{n=1}^{\infty}(a_n \cos n\omega_0 t + b_n \sin n\omega_0 t)$$

$$a_n = \frac{2}{T_0}\int_{t_1}^{t_1+T_0} f(t)\cos n\omega_0 t\,dt,$$

$$b_n = \frac{2}{T_0}\int_{t_1}^{t_1+T_0} f(t)\sin n\omega_0 t\,dt,$$

and

$$a_0 = \frac{1}{T_0}\int_{t_1}^{t_1+T_0} f(t)\,dt$$

- ***Even symmetry of a periodic function***

$$f(t) = f(-t)$$

$$a_n = \frac{4}{T_0}\int_0^{T_0/2} f(t)\cos n\omega_0 t\,dt,$$

$$b_n = 0,$$

and

$$a_0 = \frac{2}{T_0}\int_0^{T_0/2} f(t)\,dt$$

- ***Odd symmetry of a periodic function***

$$f(t) = -f(-t)$$

$$a_n = 0, \quad b_n = \frac{4}{T_0}\int_0^{T_0/2} f(t)\sin n\omega_0 t\,dt, \quad \text{and} \quad a_0 = 0$$

- ***Half-wave symmetry of a periodic function***

$$f(t) = -f(t - T_0/2)$$

$$a_n = b_n = 0, \qquad \text{for } n \text{ even}$$

$$a_n = \frac{4}{T_0}\int_0^{T_0/2} f(t)\cos n\omega_0 t\,dt \qquad \text{for } n \text{ odd}$$

$$b_n = \frac{4}{T_0}\int_0^{T_0/2} f(t)\sin n\omega_0 t\,dt \qquad \text{for } n \text{ odd and } a_0 = 0$$

- ***Time-shifting of a periodic function***

$$f(t - t_0) = \sum_{n=-\infty}^{\infty}(\mathbf{c}_n e^{-jn\omega_0 t_0})e^{jn\omega_0 t}$$

- ***Frequency spectrum of a periodic function*** A Fourier series contains discrete frequency components, called line spectra.
- ***Steady-state response of a periodic function input*** The periodic function input is expressed as a Fourier series, and phasor analysis is used to determine the response of each component of the series. Each component is transformed to the time domain, and superposition is used to determine the total output.

The Fourier transform, its features and properties, as well as its use in circuit analysis, are outlined here.

- ***Fourier transform for an aperiodic function***

$$\mathbf{F}(\omega) = \int_{-\infty}^{\infty} f(t)e^{-j\omega t} \quad \text{and} \quad f(t) = \frac{1}{2\pi}\int_{-\infty}^{\infty} \mathbf{F}(\omega)e^{-j\omega t}\,d\omega$$

- ***Fourier transform pairs and properties***
The Fourier transform pairs in Table 15.2 and the properties in Table 15.3 can be used together to transform time-domain functions to the frequency domain and vice versa.
- ***Parseval's theorem for determining the energy content of a signal***

$$\int_{-\infty}^{\infty} f^2(t)\,dt = \frac{1}{2\pi}\int_{-\infty}^{\infty} |\mathbf{F}(\omega)|^2\,d\omega$$

- ***Network response to an aperiodic input*** An aperiodic input $x(t)$ can be transformed to the frequency domain as $\mathbf{X}(\omega)$. Then using the network transfer function $\mathbf{H}(\omega)$, the output can be computed as $\mathbf{Y}(\omega) = \mathbf{H}(\omega)\mathbf{X}(\omega)$. $y(t)$ can be obtained transforming $\mathbf{Y}(\omega)$ to the time domain.

PROBLEMS

15.1 Find the exponential Fourier series for the periodic signal shown in Fig. P15.1.

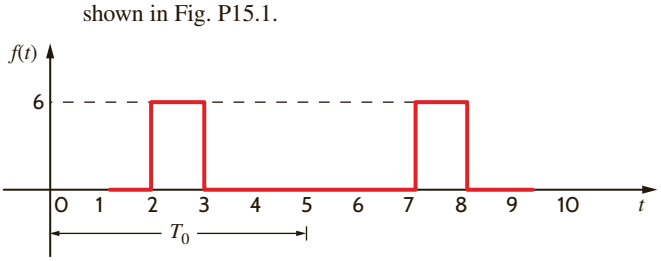

Figure P15.1

15.2 Find the exponential Fourier series for the signal shown in Fig. P15.2.

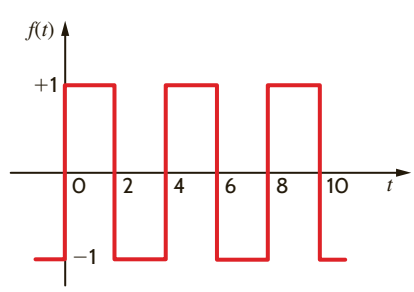

Figure P15.2

15.3 Find the exponential Fourier series for the periodic pulse train shown in Fig. P15.3.

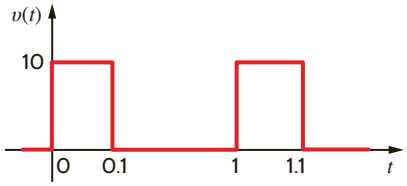

Figure P15.3

15.4 Find the exponential Fourier series for the signal shown in Fig. P15.4.

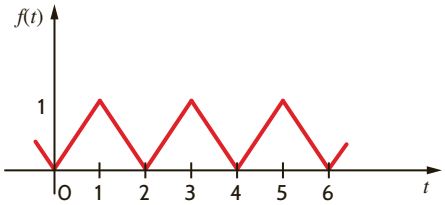

Figure P15.4

15.5 Find the exponential Fourier series for the function $f(t)$ with period 1 where $f(t)$ is defined as

$$f(t) = e^t \qquad 0 \le t < 1$$

15.6 Show that the exponential Fourier series for the periodic function $f(t) = e^{-t}, -1 < t < 1$ with period 2, can be expressed as

$$f(t) = \sum_{n=-\infty}^{\infty} \left[\frac{(-1)^n}{1 + j\pi n}\right]\left[\frac{e^1 - e^{-1}}{2}\right] e^{jn\omega_0 t}$$

15.7 Find the exponential Fourier series for the voltage waveform shown in Fig. P15.7.

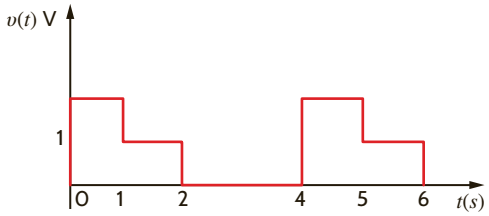

Figure P15.7

15.8 If the waveform in Problem 15.7 is time-delayed 1 second, we obtain the waveform shown in Fig. P15.8. Compute the exponential Fourier coefficients for this latter waveform and show that they differ from those for the waveform in Problem 15.7 by $n(90°)$.

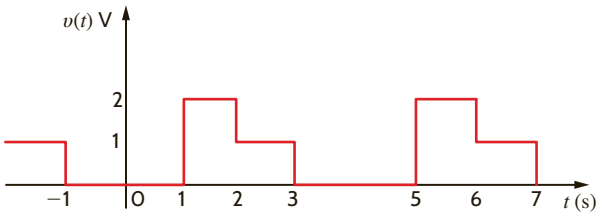

Figure P15.8

15.9 What type of symmetry is exhibited by the two waveforms in Fig. P15.9?

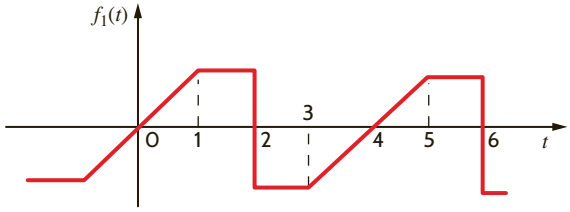

(a)

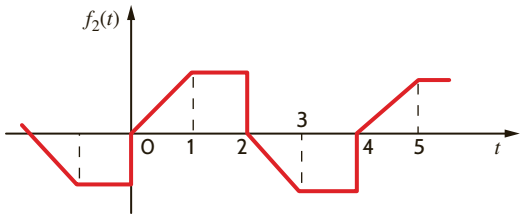

(b)

Figure P15.9

15.10 Find the trigonometric Fourier series for the waveform shown in Fig. P15.10.

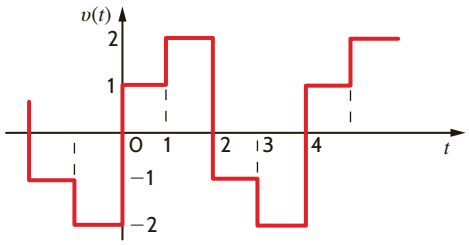

Figure P15.10

15.11 Compute the exponential Fourier series for the waveform that is the sum of the two waveforms in Fig. P15.11 by computing the exponential Fourier series of the two waveforms and adding them.

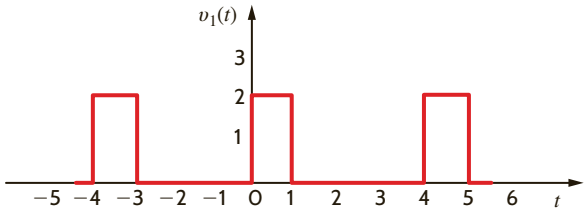

(a)

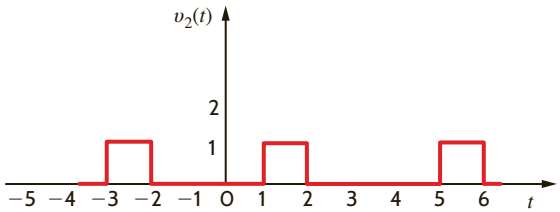

(b)

Figure P15.11

15.12 Given the waveform in Fig. P15.12, determine the type of symmetry that exists if the origin is selected at (a) l_1 and (b) l_2.

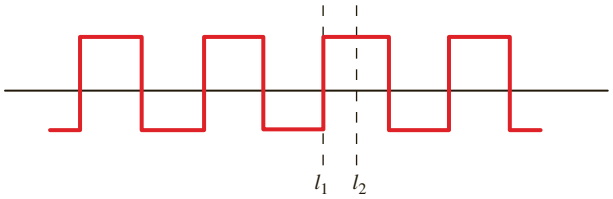

Figure P15.12

15.13 Use the trigonometric Fourier series to show that the Fourier series for the signal in Fig. P15.13 is given by the expression

$$v(t) = 1 - \frac{2}{\pi}\sum_{n=1}^{\infty}\frac{1}{n}\sin(2\pi nt)\ \text{V}$$

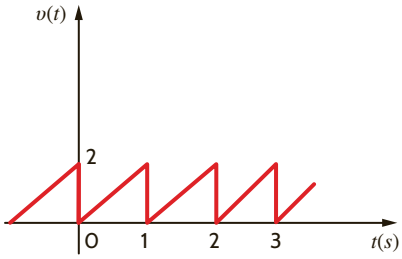

Figure P15.13

15.14 Derive the exponential Fourier series for the function $v(t) = A|\sin t|$ shown in Fig. P15.14.

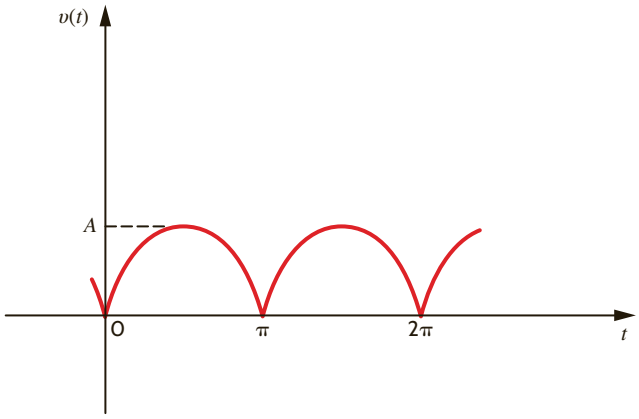

Figure P15.14

15.15 Sketch the missing section in the periodic function shown in Fig. P15.15 between $T/2$ and T, which will make (a) $a_0 = 0$, $a_n = 0$ and (b) $b_n = 0$.

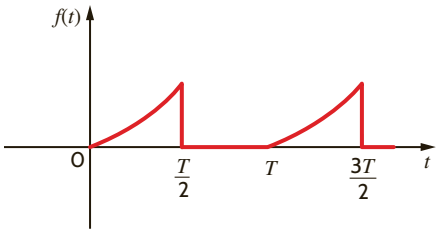

Figure P15.15

15.16 Determine which of the Fourier coefficients are zero for $f(t)$ shown in Fig. P15.16.

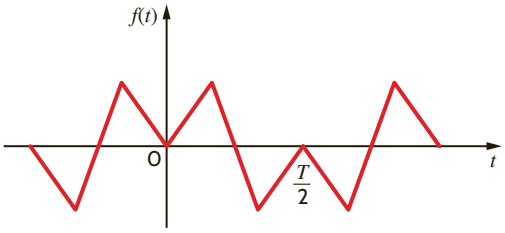

Figure P15.16

15.17 Find the trigonometric Fourier series for the voltage waveform shown in Fig. P15.17.

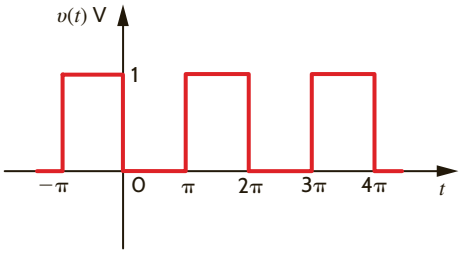

Figure P15.17

15.18 Find the trigonometric Fourier series coefficients for the waveform in Fig. P15.18.

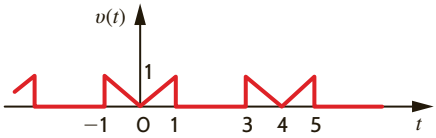

Figure P15.18

15.19 Find the trigonometric Fourier series coefficients for the waveform in Fig. P15.19.

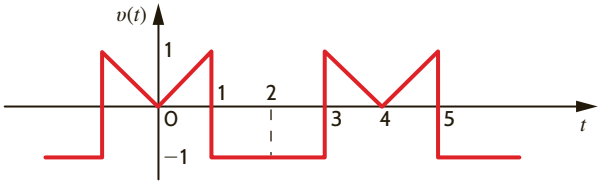

Figure P15.19

15.20 Find the trigonometric Fourier series for the periodic waveform shown in Fig. P15.20.

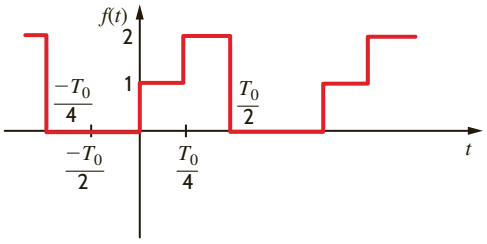

Figure P15.20

15.21 Given the waveform in Fig. P15.21, show that

$$f(t) = \frac{A}{2} + \sum_{n=1}^{\infty} \frac{-A}{n\pi} \sin \frac{2n\pi}{T_0} t$$

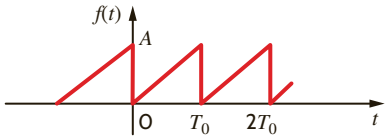

Figure P15.21

15.22 Find the trigonometric Fourier series coefficients for the waveform in Fig. P15.22.

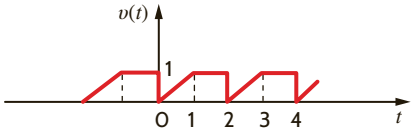

Figure P15.22

15.23 Find the trigonometric Fourier series coefficients for the waveform in Fig. P15.23.

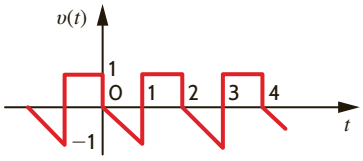

Figure P15.23

15.24 Find the trigonometric Fourier series coefficients for the waveform in Fig. P15.24.

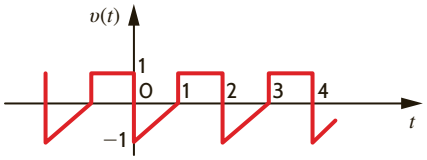

Figure P15.24

15.25 Derive the trigonometric Fourier series for the waveform shown in Fig. P15.25.

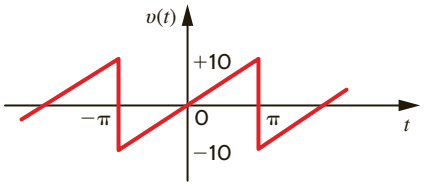

Figure P15.25

15.26 Find the trigonometric Fourier series for the waveform shown in Fig. P15.26.

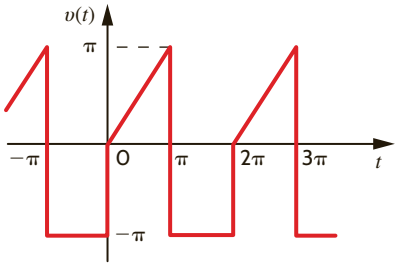

Figure P15.26

15.27 Derive the trigonometric Fourier series for the function shown in Fig. P15.27.

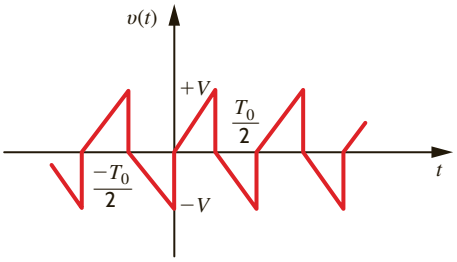

Figure P15.27

15.28 Derive the trigonometric Fourier series of the waveform shown in Fig. P15.28.

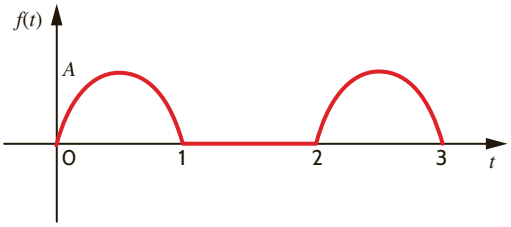

Figure P15.28

15.29 Derive the trigonometric Fourier series for the function $v(t) = A|\sin t|$ as shown in Fig. P15.29.

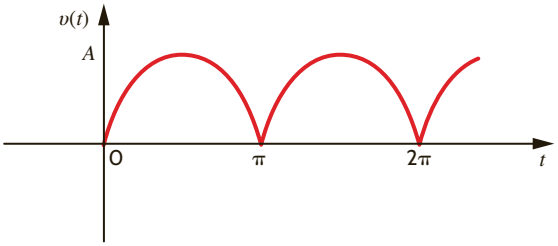

Figure P15.29

15.30 The amplitude and phase spectra for a periodic function $v(t)$ that has only a small number of terms is shown in Fig. P15.30. Determine the expression for $v(t)$ if $T_0 = 0.1$ s.

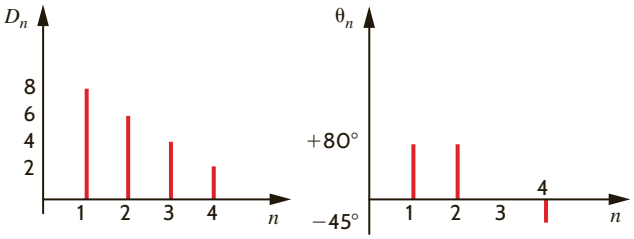

Figure P15.30

15.31 Find the trigonometric Fourier series coefficients for the waveform in Fig. P15.31.

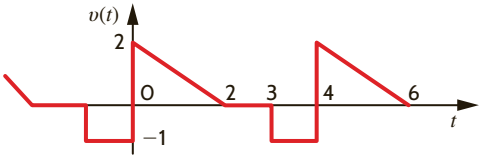

Figure P15.31

15.32 Plot the first four terms of the amplitude and phase spectra for the following signal.

$$f(t) = \sum_{\substack{n=1 \\ n\,\text{odd}}}^{\infty} \left(\frac{2}{n\pi} \sin \frac{n\pi}{2} \cos \frac{n\pi}{2} t + \frac{2}{n\pi}(2 - \cos n\pi) \sin \frac{n\pi}{2} t \right)$$

15.33 Compute the first four terms of the amplitude and phase spectra for the periodic signal defined in Problem 15.17.

15.34 For the amplitude and phase spectra shown in Fig. P15.34, express the function as a sum of sinusoidal functions using the Fourier series coefficients a_n and b_n.

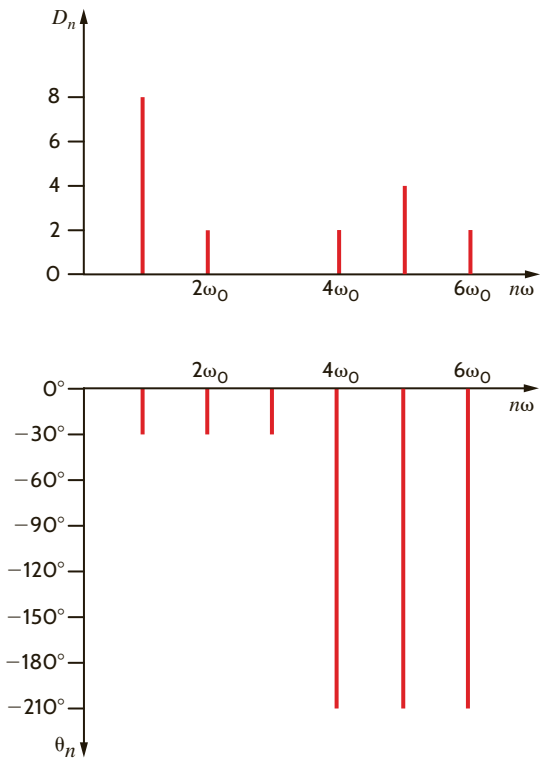

Figure P15.34

15.35 Write a function $f(t)$ in cosine form from the amplitude and phase spectra shown in Problem 15.34.

15.36 The rectified ac signal shown in Fig. P15.36a is the input to the low-pass filter shown in Fig. P15.36b. Determine the equation for the output signal $v_o(t)$.

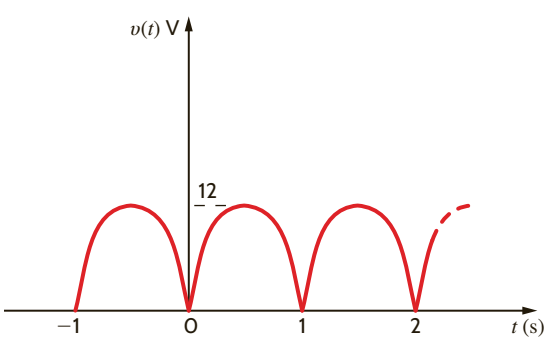

(a)

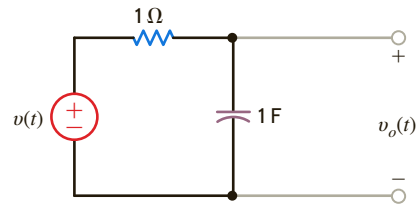

(b)

Figure P15.36

15.37 The voltage $v_s(t)$ shown in Fig. P15.37a is applied to the circuit in Fig. P15.37b. Determine the expression for the steady-state voltage $v_o(t)$ using the first eight harmonics.

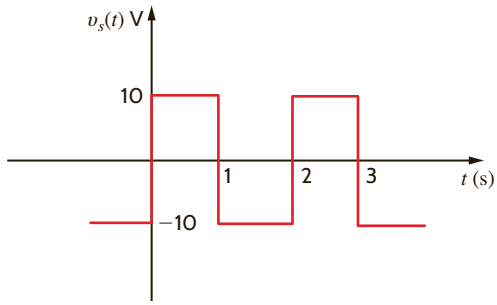

(a)

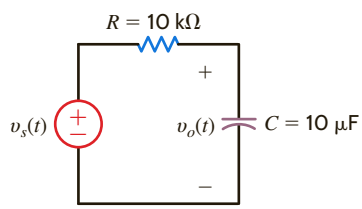

(b)

Figure P15.37

15.38 The discrete line spectrum for a periodic function $f(t)$ is shown in Fig. P15.38. Determine the expression for $f(t)$.

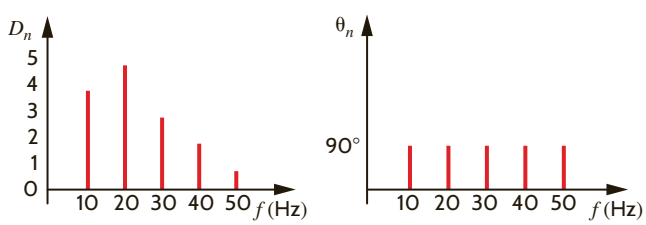

Figure P15.38

15.39 Plot the first four terms of the amplitude and phase spectra for the signal

$$f(t) = \sum_{\substack{n=1 \\ n\,\text{odd}}}^{\infty} \left(\frac{-2}{n\pi} \sin \frac{n\pi}{2} \cos n\omega_0 t + \frac{6}{n\pi} \sin n\omega_0 t \right)$$

15.40 Determine the steady-state response of the current $i_o(t)$ in the circuit shown in Fig. P15.40 if the input voltage is described by the waveform shown in Problem 15.25.

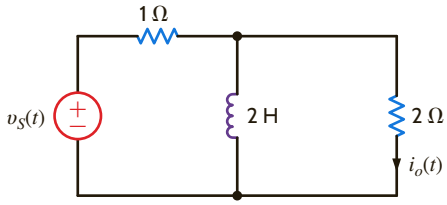

Figure P15.40

15.41 Determine the first three terms of the steady-state voltage $v_o(t)$ in Fig. P15.41 if the input voltage is a periodic signal of the form

$$v(t) = \frac{1}{2} + \sum_{n=1}^{\infty} \frac{1}{n\pi}(\cos n\pi - 1)\sin nt \text{ V}$$

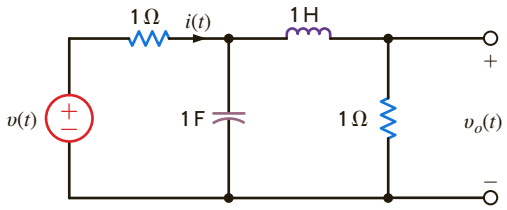

Figure P15.41

15.42 Find the average power absorbed by the network in Fig. P15.42 if

$$v(t) = 12 + 6\cos(377t - 10°) + 4\cos(754t - 60°)\text{V}$$
$$i(t) = 0.2 + 0.4\cos(377t - 150°)$$
$$-0.2\cos(754t - 80°) + 0.1\cos(1131t - 60°)\text{ A}$$

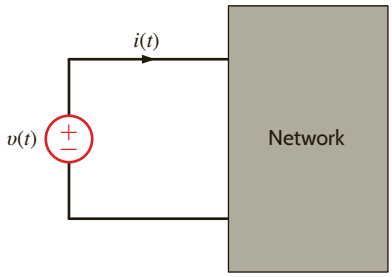

Figure P15.42

15.43 Determine the steady-state voltage $v_o(t)$ in the network in Fig. P15.43a if the input current is given in Fig. P15.43b.

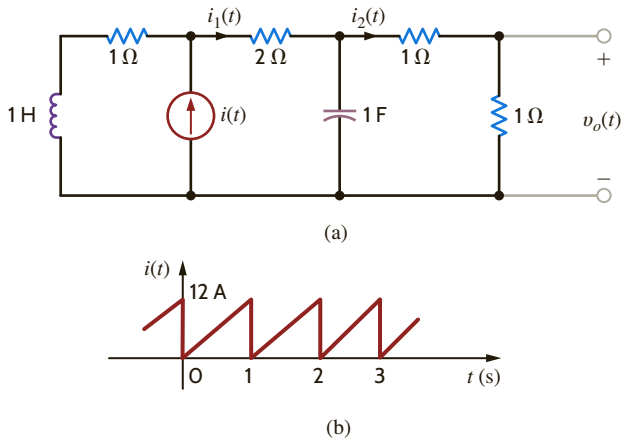

Figure P15.43

15.44 Determine the steady-state voltage $v_o(t)$ in the circuit shown in Fig. P15.44a if the input signal is shown in Fig. P15.44b.

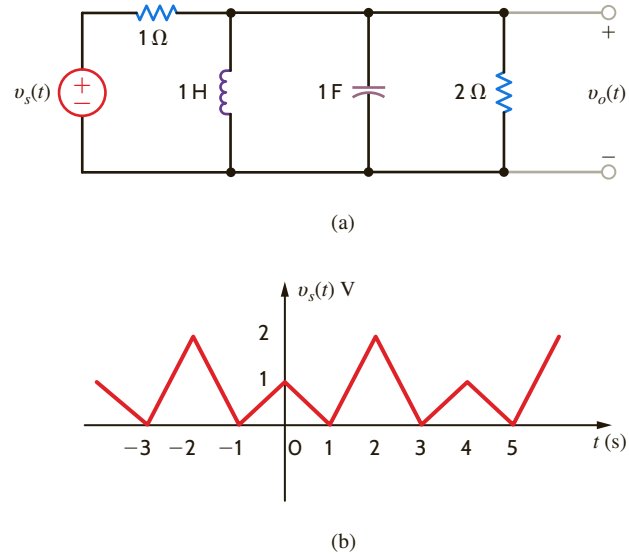

Figure P15.44

15.45 Find the average power absorbed by the network in Fig. P15.45 if

$$v(t) = 60 + 36\cos(377t + 45°) + 24\cos(754t - 60°)\text{ V}$$

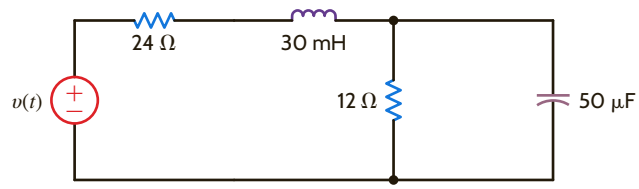

Figure P15.45

15.46 Find the average power absorbed by the 12-Ω resistor in the network in Fig. P15.45 if

$$v(t) = 50 + 25\cos(377t + 45°) + 12.5\cos(754t - 45°)\text{ V.}$$

15.47 Determine the Fourier transform of the waveform shown in Fig. P15.47.

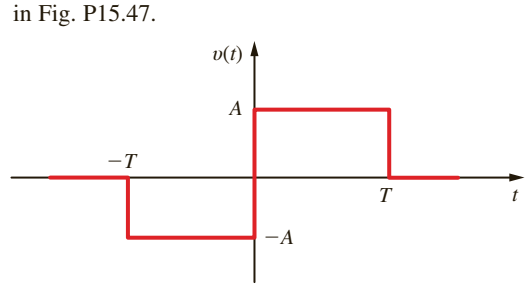

Figure P15.47

15.48 Find the Fourier transform of the function $f(t) = \sin \omega_0 t$.

15.49 Derive the following properties of the Fourier transform.

(a) $\mathcal{F}[e^{j\omega_0 t}f(t)] = \mathbf{F}(\omega - \omega_0)$

(b) $\mathcal{F}[\cos \omega_0 t f(t)] = \frac{1}{2}[\mathbf{F}(\omega - \omega_0) - \mathbf{F}(\omega - \omega_0)]$

15.50 Find the Fourier transform of the function $f(t) = te^{-at}u(t)$.

15.51 Show that

(a) $\mathcal{F}[f(at)] = (1/a)\,\mathbf{F}(\omega/a) \quad \text{for } a > 0$

(b) $\mathcal{F}[f(t-a)] = e^{-j\omega a}\mathbf{F}(\omega)$

15.52 Given that $\mathbf{F}(\omega) = \dfrac{1 + j\omega}{\omega^2 + j8\omega + 12}$, find the Fourier transform of

(a) $f(2t)$ **(c)** $8f(t/2)$

(b) $f(t-2)$ **(d)** $f(4t-1)$

15.53 Find the Fourier transform of the function

$$f(t) = 12e^{-2|t|}\cos 4t$$

15.54 Derive the Fourier transform for the following functions:

(a) $f(t) = e^{-2t}\cos 4t u(t)$

(b) $f(t) = e^{-2t}\sin 4t u(t)$

15.55 Show that

$$\mathcal{F}[f_1(t)f_2(t)] = \frac{1}{2\pi}\int_{-\infty}^{\infty}\mathbf{F}_1(x)\mathbf{F}_2(\omega - x)\,dx$$

15.56 Use the transform technique to find $v_o(t)$ in the network in Fig. P15.43a if (a) $i(t) = 4(e^{-t} - e^{-2t})u(t)$ A and (b) $i(t) = 12\cos 4t$ A.

15.57 The input signal to a network is $v_i(t) = e^{-3t}u(t)$ V. The transfer function of the network is $\mathbf{H}(j\omega) = 1/(j\omega + 4)$. Find the output of the network $v_o(t)$ if the initial conditions are zero.

15.58 Determine $v_o(t)$ in the circuit shown in Fig. P15.58 using the Fourier transform if the input signal is $i_s(t) = (e^{-2t} + \cos t)u(t)$ A.

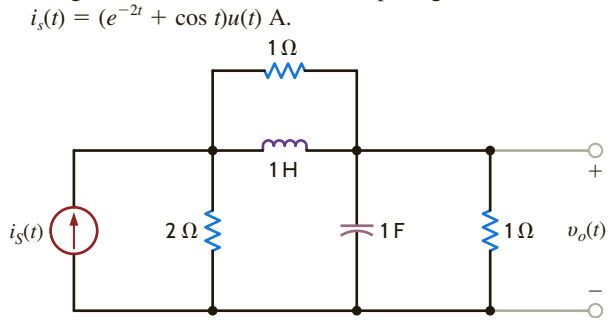

Figure P15.58

15.59 Use the Fourier transform to find $i(t)$ in the network in Fig. P15.59 if $v_i(t) = 2e^{-t}u(t)$.

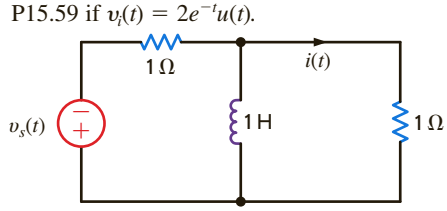

Figure P15.59

15.60 Use the transform technique to find $v_o(t)$ in the network in Fig. P15.60 if (a) $v_i(t) = 4e^{-t}u(t)$ V and (b) $v_i(t) = 4(e^{-2t} + 2e^{-4t})u(t)$ V.

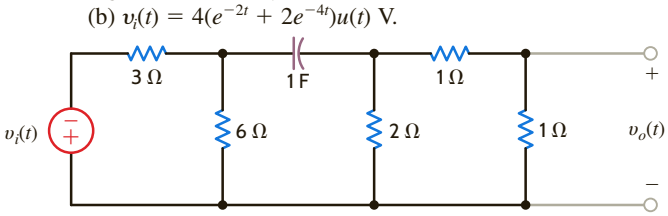

Figure P15.60

15.61 Determine the total 1-Ω energy content of the signal $v(t) = (e^{-t} - e^{-2t})u(t)$.

15.62 Determine the 1-Ω energy content of the signal in Problem 15.61 in the frequency band from 0 to 1 rad/s.

15.63 Determine the relationship between the 1-Ω energy at the input and output of the network shown in Fig. P15.63.

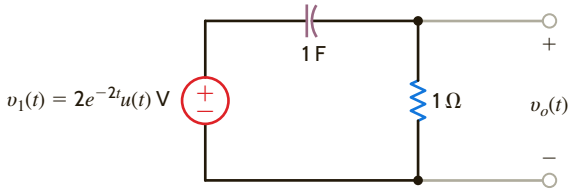

Figure P15.63

15.64 The input signal for the network in Fig. P15.64 is $v_i(t) = 10e^{-5t}u(t)$ V. Determine the total 1-Ω energy content of the output $v_o(t)$.

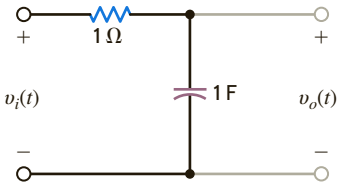

Figure P15.64

15.65 Compute the 1-Ω energy content of the signal $v_o(t)$ in Fig. P15.64 in the frequency range from $\omega = 2$ to $\omega = 4$ rad/s.

15.66 Determine the 1-Ω energy content of the signal $v_o(t)$ in Fig. P15.64 in the frequency range from 0 to 1 rad/s.

15.67 Compare the 1-Ω energy at both the input and output of the network in Fig. P15.67 for the given input forcing function $i_i(t) = 2e^{-4t}u(t)$ A.

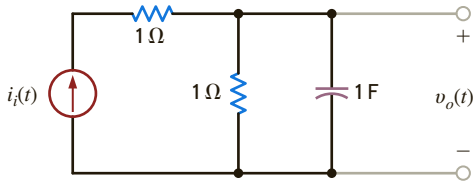

Figure P15.67

15.68 The waveform shown in Fig. P15.68 demonstrates what is called the duty cycle; that is, D illustrates the fraction of the total period that is occupied by the pulse. Determine the average value of this waveform.

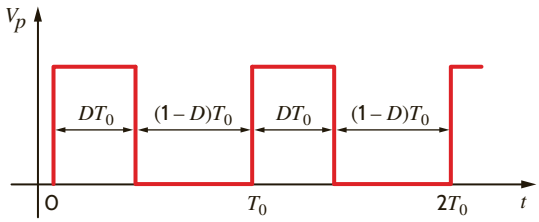

Figure P15.68

TYPICAL PROBLEMS FOUND ON THE FE EXAM

15PFE-1 Given the waveform in Fig. 15PFE-1, determine if the trigonometric Fourier coefficient a_n has zero value or nonzero value and why.

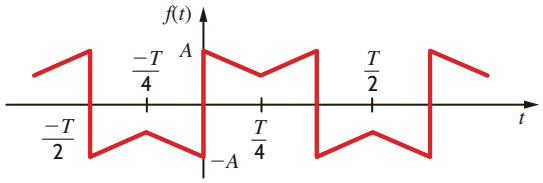

Figure 15PFE-1

a. $a_n = 0$ for n even due to half-wave symmetry

b. $a_n = 0$ for all n due to odd symmetry

c. a_n is finite and nonzero for all n

d. a_n is finite and nonzero for n even

15PFE-2 Given the waveform in Fig. 15PFE-2, describe the type of symmetry and its impact on the trigonometric Fourier coefficient b_n.

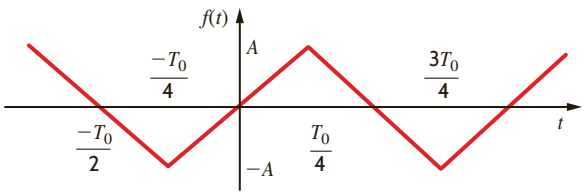

Figure 15PFE-2

a. $b_n = 0$ for n even due to odd symmetry; b_n is nonzero for n odd

b. b_n is nonzero for all n

c. $b_n = 0$ for all n due to half-wave symmetry

d. $b_n = 0$ for n even due to half-wave symmetry; b_n is nonzero for n odd

15PFE-3 Determine the first three nonzero terms of the voltage $v_o(t)$ in the circuit in Fig. 15PFE-3 if the input voltage $v_s(t)$ is given by the expression

$$v_s(t) = \frac{1}{2} + \sum_{n=1}^{\infty} \frac{30}{n\pi} \cos 2nt \text{ V}$$

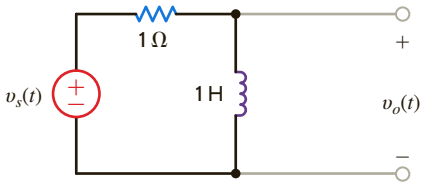

Figure 15PFE-3

a. $8.54\cos(2t + 26.57°) + 4.63\cos(4t + 14.04°) + 3.14\cos(6t + 9.46°) + \ldots$ V

b. $10.82\cos(2t + 35.63°) + 6.25\cos(4t + 18.02°) + 2.16\cos(6t + 30.27°) + \ldots$ V

c. $4.95\cos(2t - 25.43°) + 3.19\cos(4t + 60.34°) + 1.78\cos(6t - 20.19°) + \ldots$ V

d. $7.35\cos(2t + 50.12°) + 4.61\cos(4t + 21.24°) + 2.28\cos(6t - 10.61°) + \ldots$ V

15PFE-4 Find the average power absorbed by the network in Fig. 15PFE-4 if

$$v_s(t) = 20 + 10\cos(377t + 60°) + 4\cos(1131t + 45°) \text{ V}$$

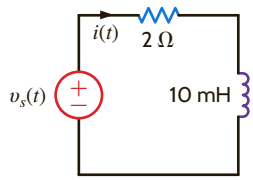

Figure 15PFE-4

a. 175.25 W

b. 205.61 W

c. 150.36 W

d. 218.83 W

15PFE-5 Find the average value of the waveform shown in Fig. 15PFE-5.

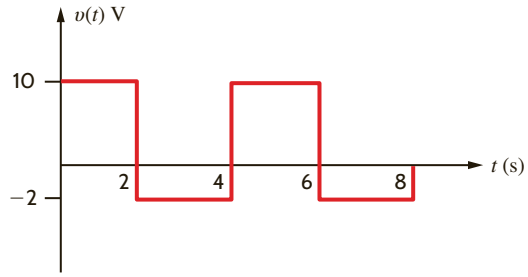

Figure 15PFE-5

a. 6 V

b. 4 V

c. 8 V

d. 2 V

APPENDIX

COMPLEX NUMBERS

The reader has normally already encountered complex numbers and their use in previous work, and therefore only a quick review of the elements employed in this book is presented here.

1 Complex Number Representation

Complex numbers are typically represented in three forms: *exponential*, *polar*, and *rectangular*. In the exponential form a complex number **A** is written as

$$\mathbf{A} = ze^{j\theta} \tag{1}$$

The nonnegative quantity z is known as the *amplitude* or *magnitude*, the real quantity θ is called the *angle*, and j is the *imaginary operator* $j = \sqrt{-1}$, where $j^2 = -1$, $j^3 = -\sqrt{-1} = -j$, and so on. As indicated in the main body of the text, θ is expressed in radians or degrees.

The *polar form* of a complex number **A**, which is symbolically equivalent to the exponential form, is written as

$$\mathbf{A} = z\underline{/\theta} \tag{2}$$

Note that in this case the expression $e^{j\theta}$ is replaced by the angle symbol $\underline{/\theta}$. The representation of a complex number **A** by a magnitude of z at a given angle θ suggests a representation using polar coordinates in a complex plane.

The rectangular representation of a complex number is written as

$$\mathbf{A} = x + jy \tag{3}$$

where x is the real part of **A** and y is the imaginary part of **A**, which is usually expressed in the form

$$\begin{aligned} x &= \text{Re}\,(\mathbf{A}) \\ y &= \text{Im}\,(\mathbf{A}) \end{aligned} \tag{4}$$

The complex number $\mathbf{A} = x + jy$ can be graphically represented in the complex plane as shown in **Fig. 1**. Note that the imaginary part of **A**, y, is real. Note that $x + jy$ uniquely locates a point in the complex plane that could also be specified by a magnitude z, representing the straight-line distance from the origin to the point, and an angle θ, which represents the angle between the positive real axis and the straight line connecting the point with the origin.

The connection between the various representations of **A** can be seen via Euler's identity, which is

$$e^{j\theta} = \cos\theta + j\sin\theta \tag{5}$$

Using this identity the complex number **A** can be written as

$$\mathbf{A} = ze^{j\theta} = z\cos\theta + jz\sin\theta \tag{6}$$

which as shown in Fig. 1 is equivalent to

$$\mathbf{A} = x + jy$$

Equating the real and imaginary parts of these two equations yields

$$\begin{aligned} x &= z\cos\theta \\ y &= z\sin\theta \end{aligned} \tag{7}$$

From these equations we obtain

$$x^2 + y^2 = z^2\cos^2\theta + z^2\sin^2\theta = z^2$$

Figure 1

Representation of a complex number in the complex plane.

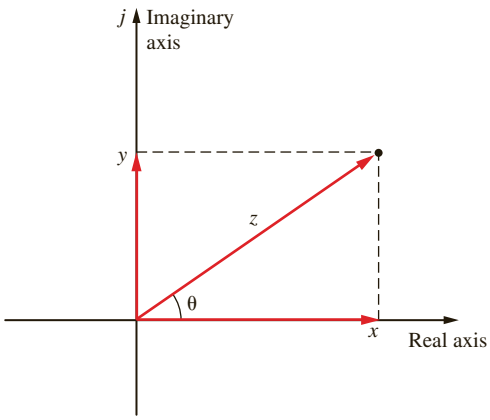

Therefore,

$$z = \sqrt{x^2 + y^2} \geq 0 \qquad \textbf{8}$$

Furthermore,

$$\frac{z \sin \theta}{z \cos \theta} = \tan \theta = \frac{y}{x}$$

and hence

$$\theta = \tan^{-1} = \frac{y}{x} \qquad \textbf{9}$$

The interrelationships among the three representations of a complex number are as follows.

EXPONENTIAL	POLAR	RECTANGULAR
$ze^{j\theta}$	$z\underline{/\theta}$	$x + jy$
$\theta = \tan^{-1} \frac{y}{x}$	$\theta = \tan^{-1} \frac{y}{x}$	$x = z \cos \theta$
$z = \sqrt{x^2 + y^2}$	$z = \sqrt{x^2 + y^2}$	$y = z \sin \theta$

EXAMPLE 1

If a complex number **A** in polar form is $\mathbf{A} = 10\underline{/30°}$, express **A** in both exponential and rectangular forms.

$$\mathbf{A} = 10\underline{/30°} = 10e^{j30°} = 10[\cos 30° + j \sin 30°] = 8.66 + j5.0$$

EXAMPLE 2

If $\mathbf{A} = 4 + j3$, express **A** in both exponential and polar forms. In addition, express $-\mathbf{A}$ in exponential and polar forms with a positive magnitude.

$$\mathbf{A} = 4 + j3 = \sqrt{4^2 + 3^2} \quad \tan^{-1} \frac{3}{4}$$

$$= 5\underline{/36.9°}$$

Also,

$$-\mathbf{A} = -5\underline{/36.9°} = 5\underline{/36.9° + 180°} = 5\underline{/216.9°} = 5e^{j216.9°}$$

or

$$-\mathbf{A} = -5\underline{/36.9°} = 5\underline{/36.9° - 180°} = 5\underline{/-143.1°} = 5e^{-j143.1°}$$

2 Mathematical Operations

We will now show that the operations of addition, subtraction, multiplication, and division apply to complex numbers in the same manner that they apply to real numbers. Before proceeding with this illustration, however, let us examine two important definitions.

Two complex numbers **A** and **B** defined as

$$\mathbf{A} = z_1 e^{j\theta_1} = z_1 \underline{/\theta_1} = x_1 + jy_1$$
$$\mathbf{B} = z_2 e^{j\theta_2} = z_2 \underline{/\theta_2} = x_2 + jy_2$$

are *equal* if and only if $x_1 = x_2$ and $y_1 = y_2$ or $z_1 = z_2$ and $\theta_1 = \theta_2 \pm n360°$, where $n = 0, 1, 2, 3, \ldots$.

EXAMPLE 3

If $\mathbf{A} = 2 + j3$, $\mathbf{B} = 2 - j3$, $\mathbf{C} = 4\underline{/30°}$, and $\mathbf{D} = 4\underline{/750°}$, then $\mathbf{A} \neq \mathbf{B}$, but $\mathbf{C} = \mathbf{D}$, since $30° = 30° + 2(360°)$.

The *conjugate*, $\mathbf{A}^*$, of a complex number $\mathbf{A} = x + jy$ is defined to be

$$\mathbf{A}^* = x - jy \tag{10}$$

that is, j is replaced by $-j$ in the rectangular form (or polar form) to obtain the conjugate. Note that the magnitude of $\mathbf{A}^*$ is the same as that of **A**, since

$$z = \sqrt{x^2 + (-y)^2} = \sqrt{x^2 + y^2}$$

However, the angle is now

$$\tan^{-1}\frac{-y}{x} = -\theta$$

Therefore, the conjugate is written in exponential and polar form as

$$\mathbf{A}^* = ze^{-j\theta} = z\underline{/-\theta} \tag{11}$$

We also have the relationship

$$(\mathbf{A}^*)^* = \mathbf{A} \tag{12}$$

EXAMPLE 4

If $\mathbf{A} = 10\underline{/30°}$ and $\mathbf{B} = 4 + j3$, then $\mathbf{A}^* = 10\underline{/-30°}$ and $\mathbf{B}^* = 4 - j3$. $(\mathbf{A}^*)^* = 10\underline{/30°} = \mathbf{A}$ and $(\mathbf{B}^*)^* = 4 + j3 = \mathbf{B}$.

ADDITION The sum of two complex numbers $\mathbf{A} = x_1 + jy_1$ and $\mathbf{B} = x_2 + jy_2$ is

$$\begin{aligned}\mathbf{A} + \mathbf{B} &= x_1 + jy_1 + x_2 + jy_2 \\ &= (x_1 + x_2) + j(y_1 + y_2)\end{aligned} \tag{13}$$

that is, we simply add the individual real parts, and we add the individual imaginary parts to obtain the components of the resultant complex number. This addition can be illustrated graphically by plotting each of the complex numbers as vectors and then performing the vector addition. This graphical approach is shown in Fig. 2. Note that the vector addition is accomplished by plotting the vectors tail to head or simply completing the parallelogram.

Figure 2

Vector addition for complex numbers.

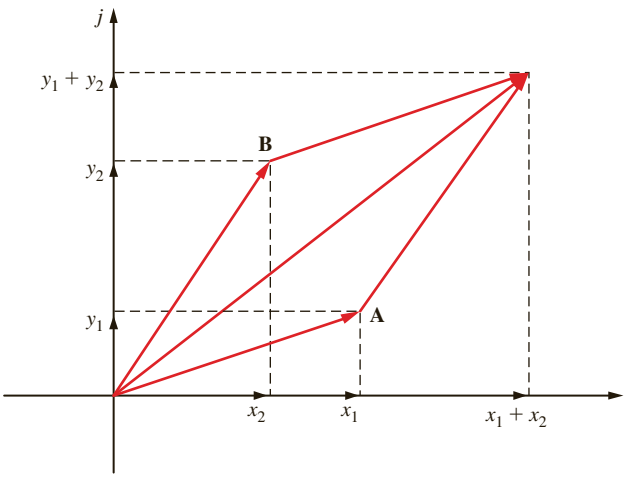

EXAMPLE 5

Given the complex numbers $\mathbf{A} = 4 + j1$, $\mathbf{B} = 3 - j2$, and $\mathbf{C} = -2 - j4$, we wish to calculate $\mathbf{A} + \mathbf{B}$ and $\mathbf{A} + \mathbf{C}$ (Fig. 3).

$$\begin{aligned}\mathbf{A} + \mathbf{B} &= (4 + j1) + (3 - j2)\\ &= 7 - j1\\ \mathbf{A} + \mathbf{C} &= (4 + j1) + (-2 - j4)\\ &= 2 - j3\end{aligned}$$

Figure 3

Examples of complex number addition.

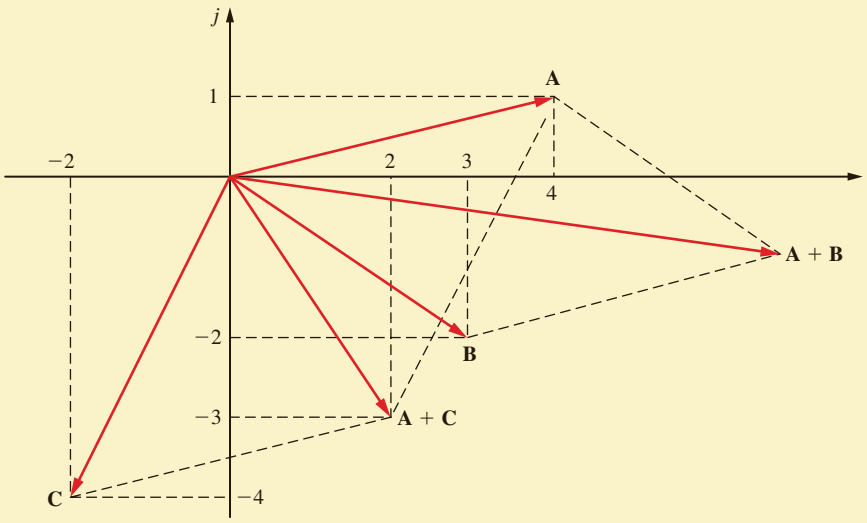

EXAMPLE 6

We wish to calculate the sum $\mathbf{A} + \mathbf{B}$ if $\mathbf{A} = 5\underline{/36.9^\circ}$ and $\mathbf{B} = 5\underline{/53.1^\circ}$.

We must first convert from polar to rectangular form.

$$\mathbf{A} = 5\underline{/36.9^\circ} = 4 + j3$$
$$\mathbf{B} = 5\underline{/53.1^\circ} = 3 + j4$$

Therefore,

$$\begin{aligned}\mathbf{A} + \mathbf{B} &= 4 + j3 + 3 + j4 = 7 + j7\\ &= 9.9\underline{/45^\circ}\end{aligned}$$

SUBTRACTION The difference of two complex numbers $\mathbf{A} = x_1 + jy_1$ and $\mathbf{B} = x_2 + jy_2$ is

$$\begin{aligned}\mathbf{A} - \mathbf{B} &= (x_1 + jy_1) - (x_2 + jy_2)\\ &= (x_1 - x_2) + j(y_1 - y_2)\end{aligned} \qquad \textbf{14}$$

that is, we simply subtract the individual real parts and we subtract the individual imaginary parts to obtain the components of the resultant complex number. Since a negative sign corresponds to a phase or angle change of 180°, the graphical technique for performing the subtraction ($\mathbf{A} - \mathbf{B}$) can be accomplished by drawing **A** and **B** as vectors, rotating the vector **B** 180°, and then adding it to the vector **A**.

EXAMPLE 7

Given $\mathbf{A} = 3 + j1$ and $\mathbf{B} = 2 - j2$, calculate the difference $\mathbf{A} - \mathbf{B}$.

$$\begin{aligned}\mathbf{A} - \mathbf{B} &= (3 + j1) - (2 - j2)\\ &= 1 + j3\end{aligned}$$

The graphical solution is shown in Fig. 4.

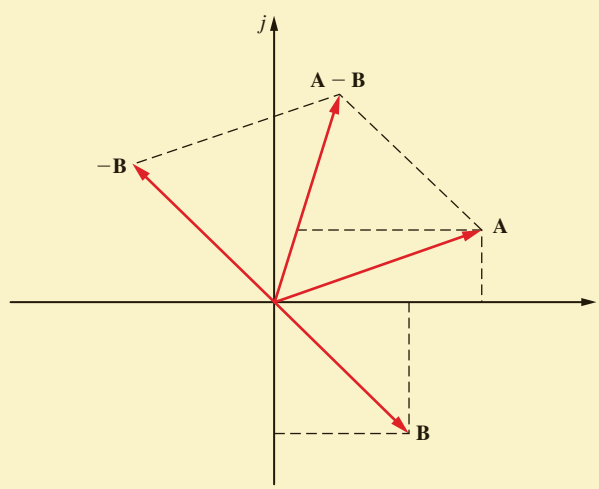

Figure 4
Example of subtracting complex numbers.

EXAMPLE 8

Let us calculate the difference $\mathbf{A} - \mathbf{B}$ if $\mathbf{A} = 5\underline{/36.9°}$ and $\mathbf{B} = 5\underline{/53.1°}$.

Converting both numbers from polar to rectangular form, we obtain

$$\mathbf{A} = 5\underline{/36.9°} = 4 + j3$$
$$\mathbf{B} = 5\underline{/53.1°} = 3 + j4$$

Then

$$\mathbf{A} - \mathbf{B} = (4 + j3) - (3 + j4) = 1 - j1 = \sqrt{2}\underline{/-45°}$$

EXAMPLE 9

Given the complex number $\mathbf{A} = 5\underline{/36.9°}$, calculate $\mathbf{A}^*$, $\mathbf{A} + \mathbf{A}^*$, and $\mathbf{A} - \mathbf{A}^*$.

If $\mathbf{A} = 5\underline{/36.9°} = 4 + j3$, then $\mathbf{A}^* = 5\underline{/-36.9°} = 4 - j3$. Hence, $\mathbf{A} + \mathbf{A}^* = 8$ and $\mathbf{A} - \mathbf{A}^* = j6$.

Note that addition and subtraction of complex numbers is a straightforward operation if the numbers are expressed in rectangular form. Note also that the sum of a complex number and its conjugate is a real number, and the difference of a complex number and its conjugate is an imaginary number.

MULTIPLICATION The product of two complex numbers $\mathbf{A} = z_1 e^{j\theta_1} = z_1\underline{/\theta_1} = x_1 + jy_1$ and $\mathbf{B} = z_2 e^{j\theta_2} = z_2\underline{/\theta_2} = x_2 + jy_2$ is

$$\mathbf{AB} = (z_1 e^{j\theta_1})(z_2 e^{j\theta_2}) = z_1 z_2 e^{j(\theta_1 + \theta_2)} = z_1 z_2\underline{/\theta_1 + \theta_2} \tag{15}$$

or

$$\begin{aligned}\mathbf{AB} &= (x_1 + jy_1)(x_2 + jy_2)\\ &= x_1x_2 + jx_1y_2 + jx_2y_1 + j^2y_1y_2\\ &= (x_1x_2 - y_1y_2) + j(x_1y_2 + x_2y_1)\end{aligned} \tag{16}$$

If the two complex numbers are in exponential or polar form, multiplication is readily accomplished by multiplying their magnitudes and adding their angles. Multiplication is straightforward, although slightly more complicated, if the numbers are expressed in rectangular form.

The product of a complex number and its conjugate is a real number; that is

$$\mathbf{AA}^* = (ze^{j\theta})(ze^{-j\theta}) = z^2e^{j0} = z^2\underline{/0^\circ} = z^2 \tag{17}$$

Note that this real number is the square of the magnitude of the complex number.

EXAMPLE 10

If $\mathbf{A} = 10\underline{/30^\circ}$ and $\mathbf{B} = 5\underline{/15^\circ}$, the products **AB** and **AA*** are

$$\mathbf{AB} = (10\underline{/30^\circ})(5\underline{/15^\circ}) = 50\underline{/45^\circ}$$

and

$$\mathbf{AA}^* = (10\underline{/30^\circ})(10\underline{/-30^\circ}) = 100\underline{/0^\circ} = 100$$

EXAMPLE 11

Given $\mathbf{A} = 5\underline{/36.9^\circ}$ and $\mathbf{B} = 5\underline{/53.1^\circ}$, we wish to calculate the product in both polar and rectangular forms.

$$\begin{aligned}\mathbf{AB} &= (5\underline{/36.9^\circ})(5\underline{/53.1^\circ}) = 25\underline{/90^\circ}\\ &= (4 + j3)(3 + j4)\\ &= 12 + j16 + j9 + j^2 12\\ &= 25j\\ &= 25\underline{/90^\circ}\end{aligned}$$

DIVISION The quotient of two complex numbers $\mathbf{A} = z_1 e^{j\theta_1} = z_1\underline{/\theta_1} = x_1 + jy_1$ and $\mathbf{B} = z_2 e^{j\theta_2} = z_2\underline{/\theta_2} = x_2 + jy_2$ is

$$\frac{\mathbf{A}}{\mathbf{B}} = \frac{z_1 e^{j\theta_1}}{z_2 e^{j\theta_2}} = \frac{z_1}{z_2}\, e^{j(\theta_1 - \theta_2)} = \frac{z_1}{z_2}\underline{/\theta_1 - \theta_2} \tag{18}$$

that is, if the numbers are in exponential or polar form, division is immediately accomplished by dividing their magnitudes and subtracting their angles as shown above. If the numbers are

in rectangular form, or the answer is desired in rectangular form, then the following procedure can be used.

$$\frac{\mathbf{A}}{\mathbf{B}} = \frac{x_1 + jy_1}{x_2 + jy_2}$$

The denominator is rationalized by multiplying both numerator and denominator by $\mathbf{B}^*$:

$$\begin{aligned}\frac{\mathbf{AB}^*}{\mathbf{BB}^*} &= \frac{(x_1 + jy_1)(x_2 - jy_2)}{(x_2 + jy_2)(x_2 - jy_2)} \\ &= \frac{x_1x_2 + y_1y_2}{x_2^2 + y_2^2} + j\frac{x_2y_1 - x_1y_2}{x_2^2 + y_2^2} \qquad \textbf{19}\end{aligned}$$

In this form the denominator is real and the quotient is given in rectangular form.

EXAMPLE 12

If $\mathbf{A} = 10\underline{/30^\circ}$ and $\mathbf{B} = 5\underline{/53.1^\circ}$, determine the quotient $\mathbf{A/B}$ in both polar and rectangular forms.

$$\begin{aligned}\frac{\mathbf{A}}{\mathbf{B}} = \frac{\mathbf{AB}^*}{\mathbf{BB}^*} &= \frac{8.66 + j5}{3 + j4}\,\frac{3 - j4}{3 - j4} \\ &= \frac{(8.66 + j5)(3 - j4)}{3^2 + 4^2} \\ &= \frac{45.98 - j19.64}{25} \\ &= 1.84 - j0.79\end{aligned}$$

or

$$\begin{aligned}\frac{\mathbf{A}}{\mathbf{B}} &= \frac{10\underline{/30^\circ}}{5\underline{/53.1^\circ}} \\ &= 2\underline{/-23.1^\circ} \\ &= 1.84 - j0.79\end{aligned}$$

As a final example, consider the following one, which requires the use of many of the techniques presented above.

EXAMPLE 13

Given $\mathbf{A} = 10\underline{/30^\circ}$, $\mathbf{B} = 2 + j2$, $\mathbf{C} = 4 + j3$, and $\mathbf{D} = 4\underline{/10^\circ}$, calculate the expression for $\mathbf{AB}/(\mathbf{C} + \mathbf{D})$ in rectangular form.

$$\begin{aligned}\frac{\mathbf{AB}}{\mathbf{C} + \mathbf{D}} &= \frac{(10\underline{/30^\circ})(2 + j2)}{(4 + j3) + (4\underline{/10^\circ})} \\ &= \frac{(10\underline{/30^\circ})(2\sqrt{2}\underline{/45^\circ})}{4 + j3 + 3.94 + j0.69} \\ &= \frac{20\sqrt{2}\underline{/75^\circ}}{7.94 + j3.69} \\ &= \frac{20\sqrt{2}\underline{/75^\circ}}{8.75\underline{/24.93^\circ}} \\ &= 3.23\underline{/50.07^\circ} \\ &= 2.07 + j2.48\end{aligned}$$

INDEX

A

ac (alternating current), defined, 2–3
ac circuit, 329
  complex power in, 362
ac circuit analysis, suggested experiments, 305
ac-dc converter, 529–530
ac network, 363
ac steady-state analysis, 328–331
  analysis techniques, 331–344
  basic ac analysis, 320
  impedance and admittance, 318–325
  Kirchhoff's laws and, 328–331
  phasor diagrams, 325–328
  phasor relationships for circuit elements, 314–318
  phasors, 312–314
  sinusoidal and complex forcing function, 309–312
  sinusoids, 306–309
ac voltage, 627
Active element, 8
Active filter with Fourier series input, designing, 617
Addition, of complex numbers, 661–662
Additivity, 173
Admittance, 321–325, 504
Alternating current. *See under* ac
Aluminum electrolytic capacitors, 220–221
AM (amplitude modulation) radio waveforms, 644–645
Ampère's law, 412, 426
Amplifier circuits
  designing, 305
  experiments on, 147
Amplifier equivalent network, 487
Amplifier-frequency response requirements, 487
Amplitude, 306, 659
Amplitude spectrum, 635
Analog-to-digital converter (ADC), 533–534, 547
Angle, 659
Angular frequency, 306
Anti-aliasing filter, 533
Aperiodic signals, 641
Apparent power, 377, 379
Audio mixer, designing, 482
Automatic holiday light display, designing, 252
Average power, 364–369, 379, 637–640

B

Balanced three-phase circuit, 454, 456
Balanced three-phase voltages, 454, 456
Balanced wye-wye connection, 457–461
Band-elimination filters, 650
Band-pass filters, 482, 523, 525–526, 558–560, 650
Band-rejection filters, 523, 525
Bandwidth, 505–506, 518, 525
Batteries, 3, 6, 8
Billah, K. Y., 600
Bipolar junction transistors (BJTs), 63
Bipolar transistors, 10
BJT common-emitter amplifier, 66
Black-box linear band-pass filter, 558–560
Blinking traffic arrow, designing, 252
Bode, Hendrik W., 491
Bode diagram
  constant term, 492
  poles or zeros at the origin, 492
  quadratic poles or zeros, 493–494
  simple poles or zeros, 492–493
Bode plots, 527, 531, 532, 594
  for amplifier, 518
  deriving the transfer function from, 499–500
  frequency response using, 491–492
  resonance and, 520–521
  for transfer function, 495–499
Branch, 30
Branch currents, 104
Breadboard experiments, 1
Break frequency, 493
Buffer amplifier, 153
Buffering, 153

C

Camera flash charging circuits, 252
Capacitors, 8, 220–227, 386
  aluminum electrolytic, 220–221
  ceramic dielectric, 220
  constructing, 219
  continuity of voltage and, 222
  current and voltage waveforms and, 223–227
  dc voltage and, 222
  double-layer, 221
  electrical symbol and, 220
  frequency-dependent impedance of, 484
  parallel, 237–239
  power factor correction and, 471–474
  series, 236–237
  stray capacitance, 220
  tantalum electrolytic, 220
  typical, 220
  voltage and current waveforms and, 223–227
  voltage-current relationships for, 317–318, 571
Carrier waveform, 644
Ceramic dielectric capacitors, 220
Characteristic equation, 277, 586
Charge, 2
Charge waveform, 14
Charging circuit for photoflash, designing, 252
Christmas tree lights, 252
Circuit analysis, 29
  Laplace circuit solutions, 570–571
  pole-zero plot/Bode plot connection, 594–595
  steady-state response, 603–606
  transfer function and, 495–499, 588–590
  transient analysis, 253, 583–585
Circuit breaker, 392, 436
Circuit diagram, 601
Circuit element models, 571–573
Circuit fusing, 392
Circuits
  dependent sources, 10, 63–68
  elements, 8–17
  independent sources, 8–9
  Laplace circuit solutions, 570–571
  Laplace transform and, 571–573
  phasor relationships and, 314–318
  s-domain representations and, 571–572
  second-order filters and, 595
  with series-parallel combinations of resistors, 50–59
  time constant and, 253, 255–256
  time-domain representations and, 572
Closed path, 30
Comparator, 163
Complementary solution, 255
Complex-conjugate poles, 553–554
Complex forcing function, 309–312
Complex numbers, 312, 659–660
  mathematical operations, 661–665
Complex plane, 587, 660
Complex power, 379–384
  in ac circuits, 362
Computer chips, 370
Conductance, 26, 321
Conjugate of complex numbers, 661
Conservation of energy, 8
Constant forcing function, 286–287
Constant term, Bode diagram and, 492
Constraint equations, 104
Continuity of current, inductor, 229
Continuity of voltage, capacitor, 222
Convolution integral, 557–560
Cosine Fourier series, 623
Cosine function, 307–308
Critically damped responses, 278, 284, 587, 589–590, 597
Current, 2–4
  direction of, 1
  for wye and delta configurations, 465
Current division, 45–47, 329–330
Current-division rule, 46, 49
Current flow, 2
Current magnitudes, 3
Current source, designing, 147
Current waveform, 14
  capacitors and, 223–227
  inductors and, 231–233
Cutoff frequencies, 525

D

Damping ratio
  exponential, 277
  quadratic poles and zeros and, 493–494
  transfer function and, 586

transient response and, 598
wind speed and, 600
dc (direct current)
capacitors and, 222
defined, 3
inductors and, 228
output voltage, 627
dc voltmeter, designing, 147
Delta configuration, 456, 465
Delta-connected loads, 457, 463–466
Delta-connected source, 461–463
Delta function, 544–547
Delta–wye network, 462
Dependent current source, 10–11
Dependent source circuits
loop analysis and, 120–127
nodal analysis and, 100–103
Norton's theorem and, 185–187
Thévenin's theorem, 185–187
Dependent sources, circuits with, 63–68
Dependent voltage sources, 10–11, 106–110
Dielectric material, 220
Differential amplifier operational amplifier circuit, 158
Differential equation approach, 253, 256–261
solving with Laplace transforms, 562–564
Differentiator circuit, suggested experiments, 219
Digital multimeter, 1
Digital oscilloscope, 559
Direct current. *See* dc
Direction, 4
Divider networks, comparing voltages and currents in, 24
Division, of complex numbers, 664–665
Double-layer capacitor, 221
Driving point functions, 489

E

Effective values of periodic waveform, 374–377
Efficiency, maximum power and, 201
Electrical safety, 391–398
Electrical shock, 391–397
Electrical symbol
for capacitor, 220
for inductors, 227
Electric charge, 2
Electric circuit, 2
Electric current, 2
Electric generator, 451
Electricity, generation of, 451–453
Electric meters, 391
Electromotive force, 3
Electronic ammeter, 161
Energy, 3–5
Energy analysis, 423–425
Energy storage elements, suggested experiments, 219
Energy transfer, 3
in resonant circuit, 507
Envelope of response, 278
Equivalence, 172
Equivalent circuits, 42, 48
for inverting and noninverting operational amplifier circuits, 156–157
with multiple sources, 41
Equivalent impedance, 320
Error signal for op-amp, 152
Euler's equation, 311
Euler's identity, 619, 622, 659
Even-function symmetry, 623–624
Experiments
to analyze three-phase circuits, 450
to develop understanding of ac circuit analysis, 305
to develop understanding of basic electric circuit concepts, 1
to develop understanding of circuit analysis using Laplace transforms, 569
to develop understanding of energy storage elements, 219
to develop understanding of Fourier techniques, 617
to develop understanding of loop and nodal techniques, 89
to develop understanding of magnetically coupled circuits, 411
to develop understanding of power in ac circuits, 362
to develop understanding of resistive circuits, 24
to develop understanding of resistive circuits with operational amplifiers, 147
to develop understanding of superposition, source transformation, and maximum power transfer, 171
to develop understanding of variable-frequency circuits, 482
on Laplace transform, 543
to learn to analyze first- and second-order transient circuits, 252
Exponential damping ratio, 277
Exponential form of complex numbers, 659–660
Exponential Fourier series, 620–622

F

Faraday, Michael, 220
Faraday's law, 412, 436
Farad (F), 220
Ferrite-core inductors, 227
FET (field-effect transistor) common-source amplifier, 66
FETs, 63
Filter networks, passive filters, 523–534
Final-value theorem, 560–561
First-order circuits, 253–274
differential equation approach, 256–261
general form of response equations, 254–256
problem-solving strategy, 262
pulse response and, 272–275
step-by-step approach, 262–272
suggested experiments, 252
Flash circuit, camera, 253–254
Flashlight circuit, 5
Flux linkage, 412–413
Fossil-fuel generating facility, 451–453
Fourier, Jean Baptiste Joseph, 618
Fourier analysis techniques
Fourier series, 618–640
Fourier transform, 641–650
suggested experiments, 617
Fourier series
average power and, 637–640
exponential, 620–622
frequency spectrum and, 635–637
generating voltage signals from, 617
steady-state network response and, 637
symmetry and trigonometric, 623–630
time-shifting and, 630–632
trigonometric, 622–623
waveform generation and, 632–635
Fourier transform, 544, 641–650
Parseval's theorem and, 647–650
properties of, 646–647
transform pairs, 642–645
Four-node circuit, 96–97
Free-body diagram, 253–254
Frequency, impedance and admittance and, 325
Frequency-dependent impedance of capacitor, 484
Frequency-dependent impedance of inductor, 483
Frequency-dependent impedance of *RLC* series network, 484–485
Frequency domain analysis, 313
Frequency-independent impedance of resistor, 483
Frequency response plots, 511–512, 520
Frequency scaling, 521–522
Frequency-shifting theorem, 549
Frequency spectrum, 635–637
Fourier series and, 635–637
Fourier transform and, 647–650
Fundamental, 618
Fundamental op-amp circuits, 154–163

G

Gain error, 157
Gaussian elimination, 93–94
General impedance relationship, 319
Generators, 8
G matrix, 97–98
Ground, 90
Ground-fault interrupter (GFI), 393–394
Grounding, 392–394

H

Half-power frequency, 523
Half-wave symmetry, 624–625, 632
Harmonic amplitude, 629
Henry, Joseph, 228
henry (H), 228
High-pass filters, 523–524, 650
High-voltage dc transmission facility, 40
High-voltage transmission lines, 451, 453
Homogeneity (scaling), 173
Hybrid couplers, 411
Hydroelectric generating facility, 451–452

I

Ideal co-amp model, 152–153
Ideal transformer, 426–436
Imaginary operator, 659
Impedance, 318–325
for wye and delta configurations, 465
Impedance matching circuit, designing, 362
Impedance-matching technique, 370
Impedance scaling, 521–522
Independent current source, 8–9

Independent source circuits, 8–9
loop analysis and, 115–120
nodal analysis and, 92–99
Norton's theorem and, 181–185
Thévenin's theorem and, 181–185
Independent voltage sources, 8–9
loop analysis and, 112–115
nodal analysis and, 103–106
Inductance, 228
Inductors, 8, 227–236
constructing, 219
current and voltage waveforms, 230–236
dc current flowing through, 228
electrical symbol and, 227
ferrite-core, 227
frequency-dependent impedance of, 483
iron-core, 227
parallel, 240–241
resistance of winding of, 519
series, 239
stray inductance, 227
typical, 228
voltage-current relationships for, 316–317, 572–573
Initial-value theorem, 560–561
In phase, 307, 315
Input impedance, 427–428
Input terminal I/V values, 152
Input terminals, 10
Instantaneous power, 363, 455–456
Instrumentation amplifier circuit, 159
Insulated-gate field-effect transistors (IGFETs), 63
Integrator circuit
suggested experiments, 219
Inverse Fourier transform, 544
Inverse Laplace transform, 544, 551–557
complex-conjugate poles, 553–554
convolution integral and, 557–558
multiple poles, 555–557
simple poles, 552–553
Inverters, 627–629
Inverting amplifier circuit, 147
Iron-core inductors, 227

J

Joules (J), 3

K

Kirchhoff, Gustav Robert, 30
Kirchhoff's current law (KCL), 30–33, 38, 48–49, 53–55, 58, 65, 67, 305, 319, 322, 326. *See also* Nodal analysis
Kirchhoff's laws, 30–38, 527
basic analysis using, 328–331
suggested experiments, 89
Kirchhoff's voltage law (KVL), 33–39, 41–45, 49, 53–56, 58–59, 64–65, 67, 319, 322, 327, 570. *See also* Loop analysis
*k*th harmonic term, 618

L

Labeling, voltage, 35–36
Laboratory signal generators, 618
Ladder network, 53
Laplace transform
analysis techniques, 573–586
circuit element models, 571–573
circuit solutions and, 570–571
convolution integral and, 557–560
definition of, 544
final-value theorem and, 560–561
frequency-shifting theorem and, 549
initial-value theorem and, 560–561
inverse transform and, 551–557
problem-solving strategy, 563
s-domain circuits, 573
singularity functions and, 544–547
solving differential equations with, 562–564
steady-state response and, 603–606
suggested experiments, 543
suggested experiments using, 569
time-scaling theorem and, 549
time-shifting theorem and, 549
transfer function and, 586–603
transform pairs, 547–548
transform properties, 549–551
transient analysis of circuits and, 583–585
transient circuits and, 563
unit impulse function and, 544–547
unit step function and, 544–547
L-C series circuit, 636
Light bulb, voltage-current relationship for, 26
Lightning stroke, 546–547
Linearity, 172–174
Line current, 465
Line spectra, 635
Line-to-line voltages, 457
Line voltages, 457, 465
LMC6492 op-amps, 150
LM234 quad co-amp, 148–151
Load. *See* Source/load connections
Load line analysis, 197
Logic probe, designing, 147
Loop, 30
Loop analysis, 111–128, 331–333, 338
circuits containing dependent sources, 120–127
circuits containing independent current sources, 115–120
circuits containing only independent voltage sources, 112–115
Norton's and Thévenin's theorems and, 195
problem-solving strategy and, 127
Loop currents, 111–112
Lossless elements, 364
Low-pass filters, 523–524, 591, 648–650
Lumped-parameter circuit, 30

M

Magnetically coupled circuits
suggested experiments, 411
Magnetically coupled coils, 412–415
Magnetically coupled networks
energy analysis, 423–425
ideal transformer, 426–436
mutual inductance, 412–423
safety considerations, 436–437
Magnetic levitation train (MagLev), 411
Magnitude, 4, 659
Magnitude, for transfer function, 494–499
Magnitude scaling, 521–522
Mathematical models, 9
Mathematical operations, 661–665
MATLAB software
loop analysis and, 114–115, 123–124, 126
nodal analysis and, 93, 95–96, 98–100
Matrix analysis, 93–95
MAX4240 co-amp, 150
Maximum average power transfer, 368–373
Maximum power transfer, 197–202
equivalent circuit for, 198
parameter plot and, 202
Maximum power transfer, suggested experiments, 171
Medical Instrumentation, 394
Mesh, 113
Mesh analysis, 113, 576, 578
to solve ac circuits, 305
Mesh currents, suggested experiments, 89
Metal-oxide-semiconductor field-effect transistors (MOSFETs), 10, 63
Metronome using 555 timer chip, 252
Microprocessors, 63
Microsoft Excel, 195–197
Mixed-mode circuitry, 533–534
Modulation theorem, 549
Motherboards, 370
Multiple poles, inverse Laplace transform and, 555–557
Multiple-source/resistor networks
single-loop circuits and, 41–44
single-node-pair circuits and, 48–50
Multiplication, of complex numbers, 664
Mutual inductance, 412–423
Mutually coupled coils, 418

N

National Electrical Code ANSI CI, 398
National Electrical Manufacturers Association (NEMA), 427
National Electric Safety Code, ANSI C2, 398
Natural frequencies, 277
Negative feedback, op-amp circuits and, 163
Network functions, 489, 586–603
Network response, 278–288
Network transfer functions, 489, 648–649
Night light, designing, 147
Nodal analysis, 90–111, 331–332, 336–337, 576
circuits containing dependent current sources, 100–103
circuits containing dependent voltage sources, 106–110
circuits containing independent voltage sources, 103–106
circuits containing only independent current sources, 92–99
Norton's and Thévenin's theorems and, 195
Ohm's law and, 91, 93, 103
problem-solving strategy, 110
reference node, 90
to solve ac circuits, 305
Node, 30
Node voltages
circuits with known, 90
illustration, 92
suggested experiments, 89

Noninverting amplifier circuit, 147
Norton, E. L., 179
Norton's theorem, 179–181, 335–336, 339–340, 431, 576, 579
  circuits containing both independent and dependent sources, 187–197
  circuits containing only dependent sources, 185–187
  circuits containing only independent sources, 181–185
  equivalent circuits, 179–180
  problem-solving strategy, 192
  source transformation and, 193–194
Notch filter, 532–533, 636
Notch-filter circuit, designing, 569
Nuclear generating facility, 451, 453

O

Odd-function symmetry, Fourier series and, 624–625
Ohm, Georg Simon, 25
Ohms, 25
Ohm's laws, 25–29, 38–39, 41, 44–45, 48–49, 53–55, 58–59, 91, 93, 103, 111
  suggested experiments, 24
Open-circuit descriptions, 27
Operational amplifiers (op-amp)
  buffer amplifier, 153
  commercial op-amps and model values, 150
  comparators, 163
  fundamental op-amp circuits, 154–163
  ideal op-amp model, 152–153
  input-output characteristics, 150
  input terminal I/V values, 152
  models, 148–153
  negative and positive feedback and, 163
  noninverting configuration, 156–157
  selection of, 148
  suggested experiments, 147
  transfer plots for, 151
  unity gain buffer performance, 151–153
Out of phase, 307, 317
Output terminals, 10
Output voltage, 580–585
Overdamped responses, 277–278, 281, 586–587, 590

P

PA03 co-amp, 150
Parallel capacitors, 237–239
Parallel circuit, 325
Parallel inductors, 240–241
Parallel resistance equation, 45
Parallel resistors, suggested experiments, 24
Parallel resonance, 514–521
Parallel resonant tuned amplifier, 530–531
Parallel *RLC* circuits, 275, 279–281, 514, 516
Parameter plot, 202
Parseval's theorem, 647–650
Particular integral solution, 255
Passive element, 8
Passive element impedance, 319
Passive filters, 482, 523–534
Passive notch filters, 482
Passive sign convention, 6
Periodic forcing functions, 637–639
Periodic function, 618–619
Periodic signals, 618, 641
Periodic voltage forcing function, 637
Per-phase circuit, 471
Phase angle, 306
Phase current, 465
Phase plots, for transfer function, 494–499
Phase spectrum, 635
Phase voltages, 456, 465
Phasor addition, 458
Phasor analysis, 305, 313–314
Phasor diagrams, 315, 325–328, 501
Phasor relationships for circuit elements, 314–318
Phasors, 305, 312–314, 619
Photoflash charging circuit, designing, 252
PID (proportional-integral-differential) controller, 569
Planar circuits, 112
Polar form of complex numbers, 659–660
Pole position, 598–599
Poles
  of the function, 490
  inverse Laplace transform and, 552–557
  at the origin, 492
  quadratic, 493–499
  simple, 492–493
Pole-zero diagrams, 593, 595, 597, 599
Pole-zero plot, 588, 603
Polyphase circuits
  power factor correction, 471–474
  power relationships, 466–471
  source/load connections, 457–466
  three-phase circuits, 451–456
  three-phase connections, 456–457
Pools, electric shock and, 395
Positive current flow, 2
Positive feedback, op-amp circuits and, 163
Potential energy, 3
Power, 6
Power balance, 465, 468
Power factor, 377–379
Power factor angle, 377
Power factor correction, 384–388, 471–474
Power flow, direction of, 471
Power relationships, 466–471
  circuit used to explain, 379
  diagram for illustrating, 380
Power transmission lines, 451, 453
Power triangle, 381, 384
Power waveform, 15
Precision differential voltage-gain device, 158–159
Prefixes, SI system, 2
Printed circuit board (PCB), 148
Proximity-type sensor, 398
Pulse response, 272–275
Pulses, and their spectra, 643
Pulse train, 273
Pulse-train signals, 618
Purely reactive circuit, 364
Purely resistive circuit, 364

Q

Quadratic poles or zeros, 493–499
Quadrature power, 379, 381
Quality factor *Q*, 501, 506
Quantities, basic, 2–8

R

Radian frequency, 306
Random access memories (RAMs), 63
RC circuit, 257–258, 264
Reactive power, 379
Read-only memories (ROMs), 63
Real power, 379
Real quantity, 659
Real transformer, properties of, 411
Recording and playback filters, 592–593
Recording Industry Association of America (RIAA), 592–593
Rectangular form of complex numbers, 659–660
Reference node, 90
Resistance, 3
Resistive circuits
  circuits with dependent sources, 63–68
  Kirchhoff's laws, 30–38
  Ohm's law, 25–29
  problems, 69–88
  series and parallel resistor combinations, 50–59
  single-loop circuits, 38–44
  single-node-pair circuits, 45–50
  wye-to-delta transformations, 59–63
Resistive network, 163
Resistor combinations
  circuits with dependent sources, 63–68
  series and parallel combinations, 50–59
  simplifying, 51
Resistors, 8
  frequency-independent impedance of, 483
  symbols and, 25
  voltage-current relationships for, 314–315, 571
"Resonance, Tacoma Narrows Bridge Failure, and Undergraduate Physics Textbooks," 599–600
Resonant circuits, 500–521
  parallel resonance, 514–521
  resonant frequency, 501
  series resonance, 500–514
Response equations, 275–278
Ringing, 278
RLC circuits, 275–276, 500–501, 506–507, 599
  transient response of, 543
RL circuits, 257–258, 260, 266, 270, 364, 367
RLC network, 503, 512–513
RLC series network, 484–485, 598–599
RL series network, 570
rms values, 374–377
Rotomolding manufacturing process, 386–387

S

Safety
  electrical, 391–398
  magnetically coupled networks, 436–437
Sampling property, 546
Scalan, R. H., 600
Scaling, 521–523

Schmitt trigger, 163
s-domain circuits, 571–576
s-domain representations, 571–572
Second harmonic, 618
Second-order circuits, 275–288
basic circuit equation, 275–276
network response, 278–288
problem-solving strategy, 279
response equations, 276–278
Second-order low-pass filter, 591, 593–598
Second-order *RLC* series network, 598–599
Second-order transient circuits, 556
suggested experiments, 252
Self-inductance, 413
Semilog plot, 487
Series and parallel resistor combinations, 50–59
Series capacitors, 236–237
Series circuit, 327, 502
Series inductors, 239
Series-parallel *RLC* circuit, 283, 287
Series *RC* circuit, building, 252
Series resistors, suggested experiments, 24
Series resonance, 500–514
Series resonant circuit, 510
Series *RLC* circuits, 275, 281–282, 286, 501
Short-circuit descriptions, 27
Signal waveform, 644–645
Sign convention for power, 6
Simple parallel circuit, 45
Simple poles, inverse Laplace transform and, 552–553
Sine function, 306–307
Sine wave, 306
Sine wave inverter output voltage, 628
Single-loop circuits, 38–44
multiple-source/resistor networks, 41–44
voltage division, 38–41
Single-node-pair circuits, 45–50
current division, 45–47
multiple—source/resistor networks, 48–50
Single-phase three-wire circuits, 388–391
Single-stage tuned amplifier, 518, 530–531
Singular function, 272
Singularity functions, 544–547
Sinusoidal forcing function, 309–312
Sinusoidal frequency analysis, 491–500
deriving the transfer function from a Bode plot, 499–500
frequency response using a Bode plot, 491–492
Sinusoidal functions, 305
Sinusoids, 306–309
Smoothing circuit, 252
Solar mirror arrays, 362
Source exchange, 333–334, 576, 578
Source/load connections, 457–466
balanced wye-wye connection, 457–461
delta-connected load, 463–466
delta-connected source, 461–463
Source transformation/source exchange, 193–194
s-plane, 587, 598–599
Square-wave signals, 618
State-variable approach, 256
Steady-state network response, Fourier series and, 637
Steady-state power analysis
average power, 364–369
complex power, 379–384
effective or rms values, 374–377
instantaneous power, 363
maximum average power transfer, 369–373
power factor, 377–379
power factor correction, 384–388
safety considerations, 391–398
single-phase three-wire circuits, 388–391
Steady-state response, 603–606
Steady-state solution, 255
Step-by-step approach, 253, 262–272
Stereo amplifier, 487–488
Stray capacitance, 220
Stray inductance, 227
Subtraction, of complex numbers, 663–664
Summing amplifier circuit, designing, 305
Supermesh approach, 118
Supernode, 104–105
Superposition, 174–178, 272, 333–334, 576, 578, 637
suggested experiments, 117
Susceptance, 321
Sweeping passive filters, 482
Symmetry and trigonometric Fourier series, 623–630
even-function symmetry, 623–624
half-wave symmetry, 624–625
odd-function symmetry, 624–625
Système International des Unités (SI), 2
System of units, 2

T

Tacoma Narrows Bridge collapse, 512–514, 599–603
Tantalum electrolytic capacitors, 220
Telephone transmission system, 527–528
Tellegen, B. D. H., 8
Tellegen's theorem, 8, 11–12, 381
Thévenin, M. L., 179
Thévenin analysis, 335, 338–339
Thévenin equivalent circuit, 529–530
Thévenin equivalent impedance, 371–372
Thévenin resistance, suggested experiments, 171
Thévenin's theorem, 179–181, 431–432, 576, 579, 581
circuits containing both independent and dependent sources, 187–197
circuits containing only dependent sources, 185–187
circuits containing only independent sources, 181–185
developmental concepts, 179
equivalent circuits, 179–180
Microsoft Excel and, 195–197
problem-solving strategy, 192
source transformation, 193–194
Three-node circuit, 92
Three-phase balanced ac power circuits, 461
Three-phase circuits, 451–456
analyzing and designing, 450
Three-phase connections, 456–457
Three-phase power transformer, 454
Time constant, circuit, 253, 255–256
Time convolution property, 646
Time-domain representations, 571–573
Time functions, 455
Time-scaling theorem, 549
Time-shifting, Fourier series and, 630–632
Time-shifting theorem, 549
Transfer functions, 494–500, 586–603
Transfer impedance, 318
Transfer plots, 151
Transformer dot markings, 411
Transformers, safety and, 436–437
Transform pairs, 547–548
Fourier, 642–645
Transient analysis, 253, 583–585
Transient circuits, Laplace transform and, 563
Transistors, safety and, 436
Trigonometric Fourier series, 622–623
even-function symmetry, 623–624
half-wave symmetry, 625
odd-function symmetry, 624–625
symmetry and, 623–630
Turbine, 451
Turns ratio, 411
Twin T-notch filter, 569
Two-loop circuit, 112

U

Unbalanced three-phase system, 474
Undamped natural frequency, 277, 586
Underdamped responses, 277–278, 282, 587, 589, 598
Unit impulse function, 544–547
Fourier transform for, 643
Units, system of, 2
Unit step function, 272–273, 544–547
Unity gain buffer, 151–153
Universal serial bus (USB) ports, 16–17
Utility transformer, 431

V

Variable-frequency circuits, suggested experiments, 482
Variable-frequency network performance
filter networks, 523–534
resonant circuits, 500–521
scaling, 521–523
sinusoidal frequency analysis, 491–500
variable-frequency response analysis, 483–490
Variable-frequency response analysis, 483–490
network functions, 489
poles and zeros, 490
Var rating, 471
Vector addition, 661–662
Vocals equalizer, designing, 482
Voltage
defining, 3
division, 38–41, 329–330
gain, 488–489
labeling, 35–36
representations, 4
for wye and delta configurations, 465
Voltage-controlled current source, 66
Voltage–current relationships, 4–5
for capacitors, 317–318, 571
for inductors, 316–317, 572–573
for resistors, 314–315, 571
Voltage-divider circuit, 39–41
Voltage magnitudes, 5

Voltage polarity, suggested experiments, 1
Voltage waveforms, 593
for capacitors, 223–227
for inductors, 230–236

W

Waveform generation, Fourier series and, 632–635
Waveforms, AM radio, 644–645
Webster, John G., 394
Wheatstone bridge circuit, 61–62, 89
Wien-bridge oscillator, 569
Wind speed, 600
Work, 3
Wye configuration, 456, 465
Wye-connected loads, 457
Wye $\rightleftharpoons$ delta transformations, 24, 59–63
Wye–wye connection, 458

Y

Y-connected three-phase power supply, designing, 450

Z

Zeros
at the origin, 492
quadratic, 493–499
simple, 492–493
of the transfer function, 490

WILEY END USER LICENSE AGREEMENT

Go to www.wiley.com/go/eula to access Wiley’s ebook EULA.